STATE OF OHIO

DEPARTMENT OF TRANSPORTATION

CUY-IR490/SR010-2.09/19.28

CITY OF CLEVELAND

CUYAHOGA COUNTY

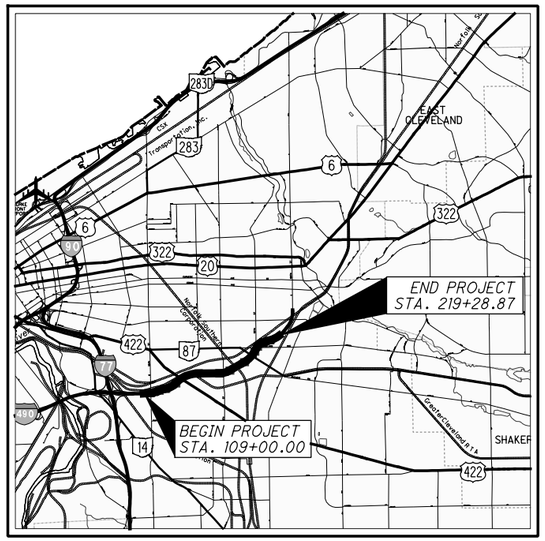

LOCATION MAP

LATITUDE: 41°29'08" LONGITUDE: 81°37'22"

SCALE IN MILES

0 1 2 3 4

N

PORTION TO BE IMPROVED
INTERSTATE HIGHWAY
FEDERAL ROUTES
STATE ROUTES
COUNTY & TOWNSHIP ROADS
OTHER ROADS

DESIGN DESIGNATION

CURRENT ADT (2017)	35,820
DESIGN YEAR ADT (2020)	48,230
DESIGN HOURLY VOLUME (2020)	3,580
DIRECTIONAL DISTRIBUTION	58%
TRUCKS (24 HOUR B&C)	6%
DESIGN SPEED	40 MPH
LEGAL SPEED	35 MPH
DESIGN FUNCTIONAL CLASSIFICATION	URBAN PRINCIPAL ARTERIAL
NHS PROJECT	NO

DESIGN EXCEPTIONS

NONE

UNDERGROUND UTILITIES

CONTACT BOTH SERVICES TWO WORKING DAYS **BEFORE YOU DIG.**

OHIO Utilities Protection SERVICE

Call Before You Dig
1-800-362-2764

(Non-members must be called directly)

OIL & GAS PRODUCERS UNDERGROUND PROTECTION SERVICE
1-800-925-0988

The Kokosing Design-Build Team
Kokosing | Michael Baker | Richland Engineering | Brownstone Grey

INDEX OF SHEETS:

SEE SHEET 2

BU-22
NORFOLK SOUTHERN BRIDGE OVER OH-10
NS MP RD-118.26

PLAN PREPARED BY:

Michael Baker
INTERNATIONAL

1111 SUPERIOR AVENUE EAST, SUITE 2300
CLEVELAND, OHIO 44114

ENGINEERS SEAL:

STATE OF OHIO
ELIZABETH JEAN HOEKENGA
E-79462
REGISTERED PROFESSIONAL ENGINEER

SIGNED: Elizabeth Hoekenga
DATE: 02/22/2019

ODOT STANDARD CONSTRUCTION DRAWINGS			CITY OF CLEVELAND STANDARD CONSTRUCTION DRAWINGS		ODOT SUPPLEMENTAL SPECIFICATIONS	SPECIAL PROVISIONS
HL-50.21 7/15/16					1083 4/15/16	
CB-1.1 1/15/16						
DM-1.1 1/15/16						
					ODOT SUPPLEMENTS	

NO.	DATE	DESCRIPTION
1	2019-10-21	DC023
0	2019-02-25	RFC

ISSUE RECORD

PROJECT DESCRIPTION

THIS PROJECT CONSISTS OF THE CONSTRUCTION OF 2.09 MILES OF A NEW TWO- TO THREE-LANE BOULEVARD FROM E. 55TH ST. TO E. 93RD ST. WORK INCLUDES PAVEMENT, RAILROAD, STRUCTURES, DRAINAGE, WATERWORK, LIGHTING, POWER DISTRIBUTION, TRAFFIC CONTROL, LANDSCAPING, AND ADJUSTMENT OF EXISTING UTILITIES.

EARTH DISTURBED AREAS

PROJECT EARTH DISTURBED AREA: 87.2 ACRES
ESTIMATED CONTRACTOR EARTH DISTURBED AREA: 0 ACRES
NOTICE OF INTENT EARTH DISTURBED AREA: 87.2 ACRES
(AREA SERVICED BY COMBINED SEWER)

2016 SPECIFICATIONS

THE STANDARD SPECIFICATIONS OF THE STATE OF OHIO, DEPARTMENT OF TRANSPORTATION, INCLUDING CHANGES AND SUPPLEMENTAL SPECIFICATIONS LISTED IN THE PROPOSAL SHALL GOVERN THIS IMPROVEMENT.

FEDERAL PROJECT NO. E140 (249)

PID NO. 96833

CONSTRUCTION PROJECT NO. 17-3000

RAILROAD INVOLVEMENT
NORFOLK SOUTHERN
GCRTA

CUY-IR490/SR010-2.09/19.28

RECORD PLANS

BU-22 - NORFOLK SOUTHERN BRIDGE OVER OH-10
...\BU-22\96833_GT022.dgn 10/24/2019 9:57:30 AM ccummings

ISSUE NO.	RECORD DATE	PAGE NO.	SHEET TITLE
1	2019-10-21	1	TITLE SHEET
6	2024-09-10	2	INDEX OF SHEETS
0	2019-02-25	3	SITE PLAN
0	2019-02-25	4	GENERAL PLAN
0	2019-02-25	5	GENERAL NOTES (1 OF 5)
0	2019-02-25	6	GENERAL NOTES (2 OF 5)
1	2020-01-10	7	GENERAL NOTES (3 OF 5)
0	2019-02-25	8	GENERAL NOTES (4 OF 5)
0	2019-02-25	9	GENERAL NOTES (5 OF 5)
0	2019-02-25	10	PHASING DETAILS (1 OF 2)
0	2019-02-25	11	PHASING DETAILS (2 OF 2)
0	2019-02-25	12	TEMPORARY SHORING CROSS SECTIONS
1	2024-09-10	13	FOUNDATION PLAN
1	2024-09-10	14	DRILLED SHAFT DETAILS
1	2021-08-03	15	REAR ABUTMENT PLAN AND ELEVATION
2	2024-09-10	16	REAR ABUTMENT SECTIONS
1	2021-08-03	17	FORWARD ABUTMENT PLAN AND ELEVATION
2	2024-09-10	18	FORWARD ABUTMENT DETAILS
1	2024-09-10	19	ABUTMENT DRAINAGE DETAILS
1	2024-09-10	20	REAR ABUTMENT FACING DETAIL
1	2024-09-10	21	FORWARD ABUTMENT FACING DETAILS
0	2019-02-25	22	PIER PLAN AND ELEVATION
0	2019-02-25	23	PIER AESTHETIC DETAILS
1	2024-09-10	24	TRANSVERSE SECTION
2	2024-09-10	25	FRAMING PLAN
1	2021-08-03	26	GIRDER ELEVATION - SPAN 1
1	2021-08-03	27	GIRDER ELEVATION - SPAN 2
2	2024-09-10	28	DIAPHRAGM DETAILS (1 OF 2)
0	2019-02-25	29	DIAPHRAGM DETAILS (2 OF 2)
1	2024-09-10	29A	BEARING STIFFENER RETROFIT DETAILS (REVISED, 1 OF 1)
3	2024-09-10	30	FIXED BEARING DETAILS
2	2024-09-10	31	EXPANSION BEARING DETAILS
1	2024-09-10	32	DECK PLAN - SPAN 1
1	2024-09-10	33	DECK PLAN - SPAN 2
0	2019-02-25	34	DECK SCREED ELEVATION TABLE - SPAN 1
0	2019-02-25	35	DECK SCREED ELEVATION TABLE - SPAN 2
3	2021-08-03	36	EXPANSION JOINT DETAILS
0	2019-02-25	37	PARAPET DETAILS
1	2024-09-10	38	FENCE DETAILS (1 OF 4)
1	2024-09-10	39	FENCE DETAILS (2 OF 4)
1	2024-09-10	40	FENCE DETAILS (3 OF 4)
1	2024-09-10	41	FENCE DETAILS (4 OF 4)
1	2024-09-10	42	STRUCTURAL DRAINAGE DETAILS (1 OF 2)
0	2019-02-25	43	STRUCTURAL DRAINAGE DETAILS (2 OF 2)
0	2019-02-25	44	PAVING DETAILS
0	2019-02-25	45	REINFORCING SCHEDULE (1 OF 3)
0	2019-02-25	46	REINFORCING SCHEDULE (2 OF 3)
0	2019-02-25	47	REINFORCING SCHEDULE (3 OF 3)

ISSUE NO.	RECORD DATE	PAGE NO.	SHEET TITLE

NO.	DATE	DESCRIPTION	NO.	DATE	DESCRIPTION
4	2020-01-10	DC030			
3	2019-12-18	DC026			
2	2019-10-21	DC023			
1	2019-07-09	DC010	6	2024-09-10	RECORD DRAWINGS
0	2019-02-25	RFC	5	2021-08-03	DC054
ISSUE RECORD			ISSUE RECORD		

INDEX OF SHEETS

RECORD PLANS

RECORD PLANS

CUY-IR490/ SR010-2.09/19.28

RECORD PLANS

BU-22 - NORFOLK SOUTHERN BRIDGE OVER OH-10
...\BU-22\96833_IN022.dgn 12/10/2024 3:22:11 PM Rohit.Bk

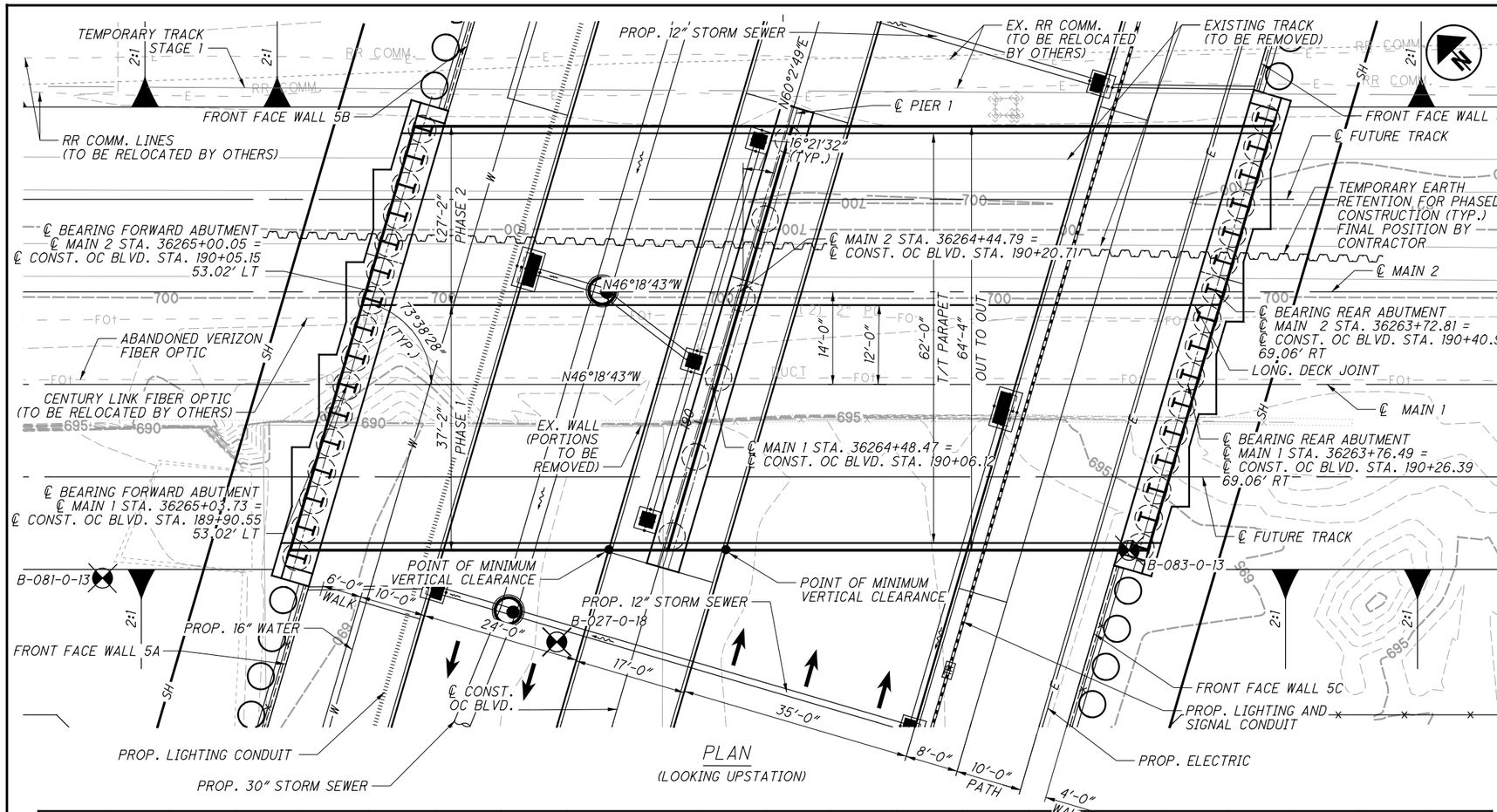

PLAN
(LOOKING UPSTATION)

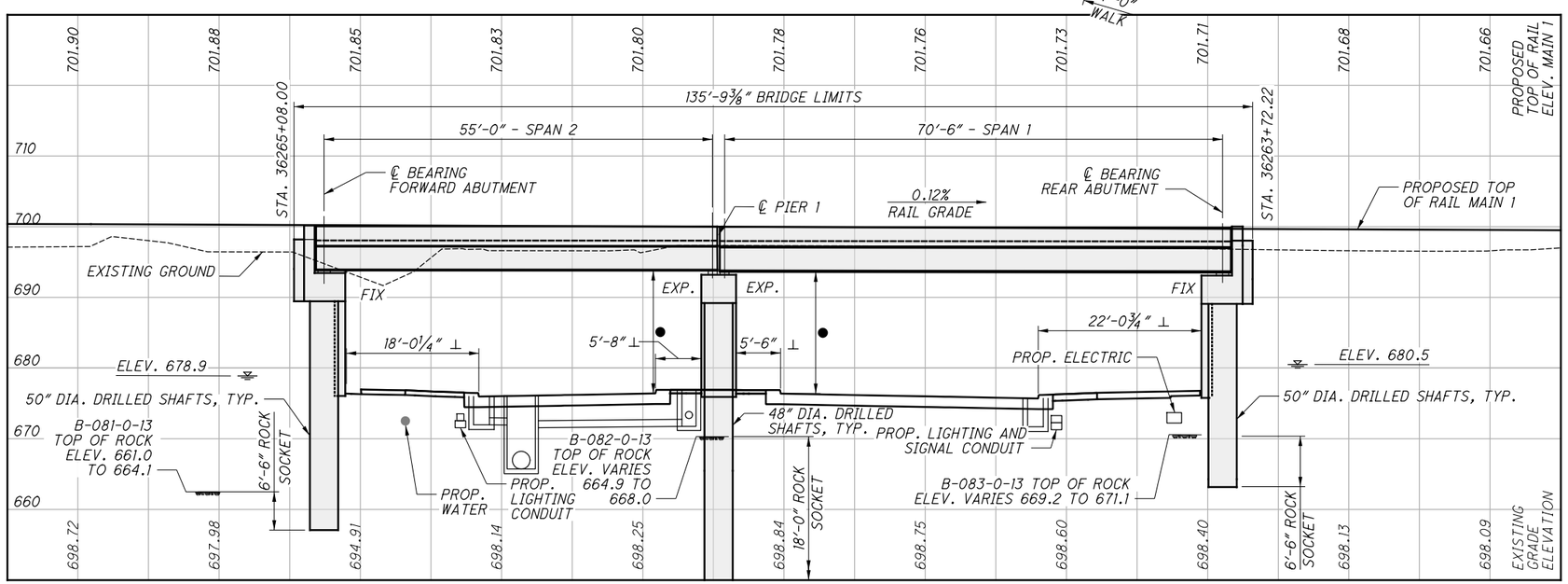

PROFILE ALONG ℄ TRACK MAIN 1

BENCHMARK DATA

BM #1 STA. 185+81.89,	ELEV. 684.15,	OFFSET 260.81'	LT
BM #2 STA. 188+15.79,	ELEV. 686.17,	OFFSET 125.85'	RT
BM #3 STA. 194+97.72,	ELEV. 685.29,	OFFSET 216.22'	LT
BM #4 STA. 191+27.76,	ELEV. 697.67,	OFFSET 173.29'	RT

FOR ADDITIONAL BENCHMARK INFORMATION, SEE BU-15.

NOTES

EARTHWORK LIMITS SHOWN ARE APPROXIMATE. ACTUAL SLOPES SHALL CONFORM TO PLAN CROSS SECTIONS.

LEGEND

- BORING LOCATION
- ● 16'-6" REQUIRED MINIMUM VERTICAL CLEARANCE
- 17'-0⅜" ACTUAL MINIMUM VERTICAL CLEARANCE EASTBOUND
- 17'-1⅝" ACTUAL MINIMUM VERTICAL CLEARANCE WESTBOUND
- ⊥ - DIMENSIONS NORMAL TO OC BLVD.
- SEE SHEET 6 /45 FOR ABBREVIATIONS

DESIGN TRAFFIC

FREIGHT TRAINS PER DAY = 80
PASSENGER TRAINS PER DAY = 2
TRAIN SPEED = 45 MPH (FREIGHT) 55 MPH (PASSENGER)
TEMPORARY TRACK SPEED = 45 MPH (FREIGHT) 55 MPH (PASSENGER)

PROPOSED STRUCTURE

TYPE: TWO SPAN (SIMPLE) MULTIPLE STEEL PLATE GIRDER STRUCTURES WITH A COMPOSITE DECK SUPPORTED ON REINFORCED CONCRETE, CAP AND COLUMN ABUTMENTS AND PIER WITH FACING

SPANS: 70'-6", 55'-0" C/C BEARINGS

DECK WIDTH: 62'-0" TOE/TOE PARAPET, 64'-4" O/O

LOADING: COOPER E-80 WITH DIESEL IMPACT TRAIN LOAD OR ALTERNATE LOAD & 6" FUTURE TRACK SURFACING

SKEW: 16° 21' 32" LEFT FORWARD

APPROACH SLABS: NONE

ALIGNMENT: TANGENT

CROWN: 0.125 IN/FT

COORDINATES: LATITUDE 41° 29' 04.90" N
LONGITUDE 81° 37' 47.82" W

NO.	DATE	DESCRIPTION
0	2/25/19	RFC

ISSUE RECORD

DESIGN AGENCY
Michael Baker INTERNATIONAL
1111 SUPERIOR AVE E, SUITE 2300, CLEVELAND, OH 44114

DRAWN	REVIEWED	DATE
LJH	JWB	11/5/2018
DESIGNED	REVISED	STRUCTURE FILE NUMBER
LJH	—	1801519
CHECKED		
LPC		

RECORD PLANS

CUYAHOGA CO.
STA. 36263+72.22
STA. 36265+08.00

SITE PLAN
CUY-010-2039
NORFOLK SOUTHERN RAILROAD OVER OH-10

RECORD PLANS

CUY-IR490/SR010-2.09/19.28
PID No. 96833

RECORD PLANS

1 / 45

3 / 47

RFC SUBMITTAL
BU-22 - NORFOLK SOUTHERN BRIDGE OVER OH-10
...\Sheets\010_2039C_SP601.dgn 3/18/2019 1:35:04 PM ccummings

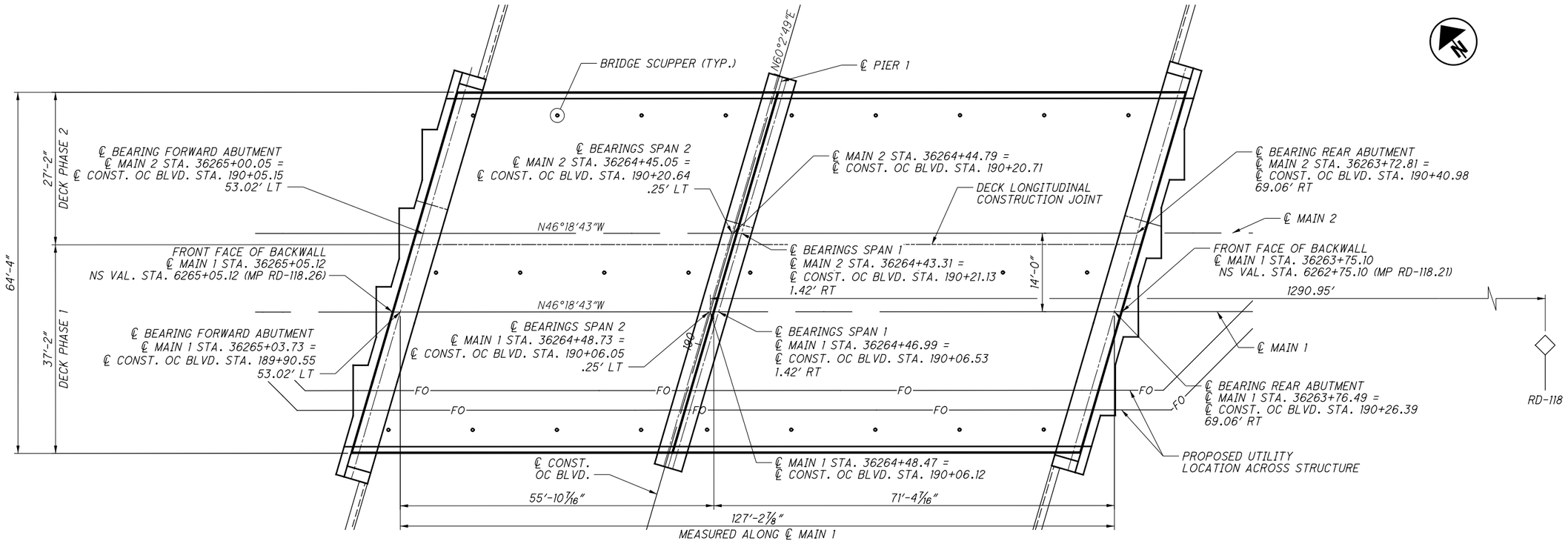

GENERAL PLAN

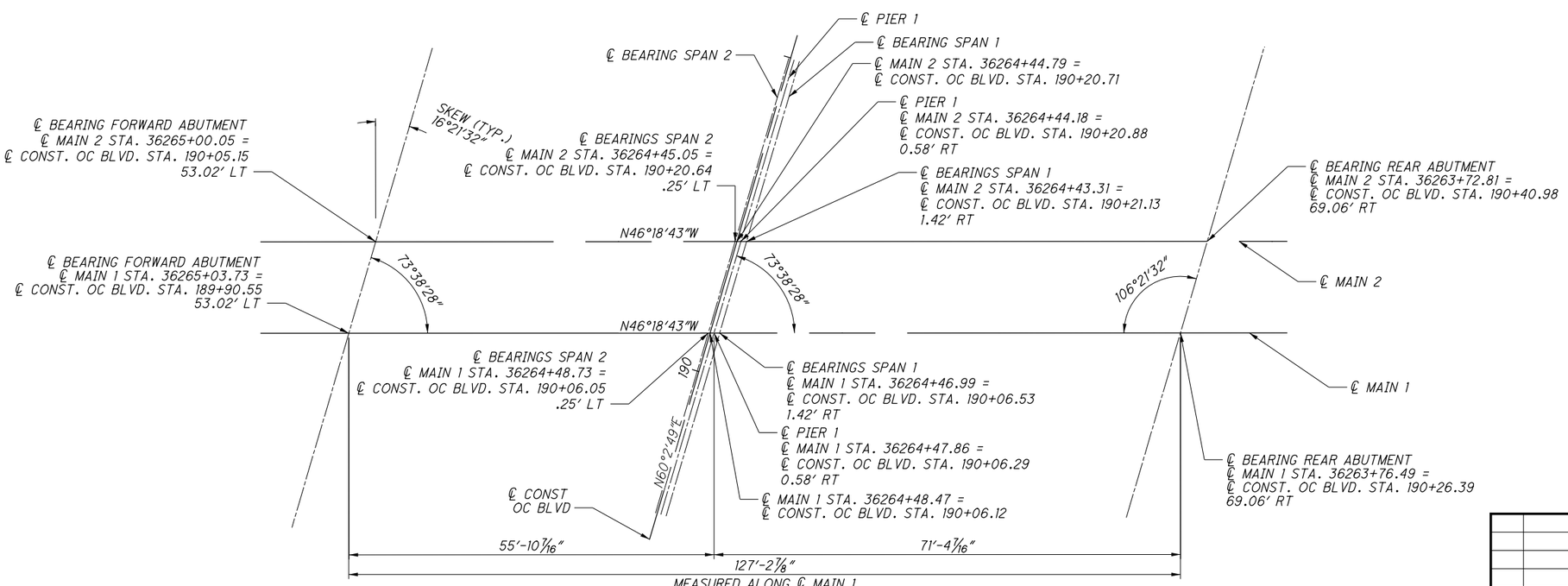

GEOMETRIC LAYOUT

NO.	DATE	DESCRIPTION
0	2/25/19	RFC

ISSUE RECORD

DESIGN AGENCY
Michael Baker INTERNATIONAL
1111 SUPERIOR AVE E., SUITE 2300, CLEVELAND, OH 44114

DESIGNED	DRAWN	REVIEWED	DATE
LJH	GMC	JWB	11/5/2018
CHECKED	REVISED	STRUCTURE FILE NUMBER	
LPC	—	1801519	

RECORD PLANS

GENERAL PLAN
CUY-010-2039
NORFOLK SOUTHERN RAILROAD OVER OH-10

RECORD PLANS

CUY-IR490/SR010-2.09/19.28
PID No. 96833

RECORD PLANS

RFC SUBMITTAL
BU-22 - NORFOLK SOUTHERN BRIDGE OVER OH-10
...\Sheets\010_2039C_SG601.dgn 3/18/2019 1:35:29 PM ccummings

CONSTRUCTION SPECIFICATIONS

PROVIDE MATERIALS AND PERFORM WORK IN ACCORDANCE WITH NORFOLK SOUTHERN PUBLIC PROJECTS MANUAL, AUGUST 2015, AREMA 2016 MANUAL FOR RAILWAY ENGINEERING, STATE OF OHIO DEPARTMENT OF TRANSPORTATION CONSTRUCTION & MATERIALS SPECIFICATIONS JANUARY 1, 2016 (ODOT CMS), AND THE SUPPLEMENTAL SPECIFICATIONS.

REFER TO THE FOLLOWING STANDARD DRAWING(S):
HL-50.21 DATED 07/15/2016
CB-1.1 DATED 01/15/16
DM-1.1 DATED 01/15/16

MAINTENANCE-OF-WAY

COORDINATE ALL WORK WITH NORFOLK SOUTHERN RAILWAY COMPANY.

CONTACT:
E.W. CHAMBERS
ENGINEER PUBLIC IMPROVEMENTS (IA, IN, KY, MI, & OH)
NORFOLK SOUTHERN CORPORATION
1200 PEACHTREE STREET
ATLANTA, GA 30309
404-529-1436 (O)

CONTRACTOR SHALL MAINTAIN A CONSTRUCTION CLEARANCE OF 10 FEET HORIZONTALLY FROM THE CENTERLINE OF TRACKS AND 22 FEET VERTICALLY FROM A POINT LEVEL WITH THE TOP OF THE HIGHER RAIL, AND 10 FEET FROM THE CENTERLINE OF TRACKS, AT ALL TIMES.

GEOTECHNICAL INFORMATION

SOIL BORING LOGS AND SUBSURFACE PROFILES CAN BE FOUND IN THE GEOTECHNICAL ENGINEERING DESIGN REPORT

DESIGN SPECIFICATIONS

DESIGN WAS COMPLETED IN ACCORDANCE WITH THE FOLLOWING DESIGN STANDARDS:

AREMA (AMERICAN RAILWAY ENGINEERING AND MAINTENANCE-OF-WAY ASSOCIATION, 2016) MANUAL FOR RAILWAY ENGINEERING.

NORFOLK SOUTHERN (NS) GUIDELINES FOR DESIGN OF GRADE SEPARATION STRUCTURES (AUGUST, 2015).

REINFORCED CONCRETE DESIGN AS PER AREMA, CHAPTER 8-2.1.2, LOAD FACTOR METHOD.

STRUCTURAL STEEL DESIGN AS PER AREMA CHAPTER 15, ALLOWABLE STRESS DESIGN.

LIVE LOAD DISTRIBUTION TO BEAMS AND GIRDERS METHOD IS BASED UPON AREMA 15-1.3.4.

LIVE LOAD:
LIVE LOAD COOPER E-80 INCLUDING ALTERNATE LIVE LOAD ON 4 AXLES.

IMPACT:
ROLLING EQUIPMENT WITHOUT HAMMER BLOW AS PER AREMA CHAPTER 15-1.3.5

DEAD LOAD:
INCLUDES 6" ADDITIONAL BALLAST FOR FUTURE TRACK SURFACING.
USE REMOVABLE DECK FORMS.

FATIGUE DESIGN IS BASED ON AREMA 15-1.3.13.

THE SUPERSTRUCTURE IS NON-COMPOSITE FOR STRENGTH REQUIREMENTS AND COMPOSITE FOR LIVE LOAD DEFLECTION REQUIREMENTS.

DESIGN DATA

SUBSTRUCTURE CONCRETE, PIER AND ABUTMENTS INCLUDING DRILLED SHAFTS, AS PER PLAN COMPRESSIVE STRENGTH 4,000 PSI

SUPERSTRUCTURE CONCRETE COMPRESSIVE STRENGTH 4,500 PSI

REINFORCING STEEL GRADE 60 MINIMUM YIELD STRENGTH 60,000 PSI
PROVIDE EPOXY COATED REINFORCING STEEL BARS DO NOT WELD GRADE 60 REINFORCING BARS. PROVIDE 2" CONCRETE COVER ON REINFORCEMENT BARS EXCEPT AS NOTED.

STRUCTURAL STEEL ASTM A709 GRADE 50 YIELD STRENGTH 50,000 PSI (GIRDERS, STIFFENERS, INTERMEDIATE DIAPHRAGMS, END DIAPHRAGMS, AND DRILLED SHAFT EMBEDDED SHAPES)

STRUCTURAL STEEL ASTM A36 YIELD STRENGTH 36,000 PSI (BEARINGS)

STRUCTURAL STEEL ASTM F1554 GRADE 105 YIELD STRENGTH 105,000 PSI (ANCHOR RODS)

STRUCTURAL STEEL STUDS ASTM A108, GRADES 1010 THROUGH 1020 EITHER SEMI- OR FULLY-KILLED

NORFOLK SOUTHERN RAILROAD COORDINATION

ALL RAILS, TIES AND INCIDENTALS TRACK METAL WORK FOR THE TRACKS WILL BE FURNISHED AND PLACED BY NORFOLK SOUTHERN.

THE CONSTRUCTION PROGRAM WILL REQUIRE CLOSE COORDINATION AND COOPERATION WITH NORFOLK SOUTHERN PERSONNEL FOR ALL OPERATIONS THAT INVOLVE TRACK WORK AND RAIL SERVICE. THE TIME OF SPECIFIC TRACK CLOSINGS, OPENINGS, SWITCHING AND OTHER REQUIRED RAIL, TIE AND BALLAST WORK IN ALL CASES SHALL ALSO BE SUBJECT TO NORFOLK SOUTHERN APPROVAL.

CONTRACTOR SHALL NOTIFY NORFOLK SOUTHERN COMMUNICATIONS AND SIGNALS DEPARTMENT SIX (6) WEEKS PRIOR TO WORK IMPACTING EXISTING TRACKS.

REGULATED MATERIALS

REFER TO DEMOLITION PLANS IN BUILDABLE UNIT 15 - ROADWAY AND PAVEMENT, KINGSBURY RUN TO END PROJECT FOR LOCATION AND IDENTIFICATION OF KNOWN REGULATED MATERIALS. HANDLING OF REGULATED MATERIALS SHALL BE IN ACCORDANCE WITH CONTRACT DOCUMENTS.

EXCAVATION

THE CONTRACTOR IS RESPONSIBLE FOR THE STABILITY OF ALL EXCAVATED SLOPES. DIRECT SURFACE RUNOFF AWAY FROM THE EXCAVATION. GROUNDWATER LEVELS FLUCTUATE SEASONALLY AS A FUNCTION OF PRECIPITATION AND OTHER HYDROLOGICAL FACTORS. THEREFORE, THERE MAY BE CONSIDERABLE CHANGE IN THE WATER TABLE OR THE PRESENCE OF WATER WHERE NOT PREVIOUSLY ENCOUNTERED. PERFORM ALL EXCAVATIONS IN ACCORDANCE WITH OSHA REQUIREMENTS AND NORFOLK SOUTHERN SPECIFICATIONS FOR SHORING.

EXCAVATE ACCORDING TO CONSTRUCTION SEQUENCES DRAWINGS AND NOTES. DO NOT OVEREXCAVATE.

MONITORING MOVEMENT OF TRACK AND TEMPORARY SHORING

THE CONTRACTOR SHALL SUBMIT A DETAILED TRACK MONITORING PROGRAM FOR APPROVAL BY THE RAILROAD ENGINEER. THE PROGRAM SHALL SPECIFY THE SURVEY LOCATIONS, THE DISTANCE BETWEEN THE LOCATION POINTS, AND FREQUENCY OF MONITORING BEFORE, DURING, AND AFTER CONSTRUCTION. THE SURVEY DATA SHALL BE COLLECTED IN ACCORDANCE WITH THE APPROVED FREQUENCY AND IMMEDIATELY FURNISHED TO THE RAILROAD ENGINEER FOR ANALYSIS.

IF ANY MOVEMENT HAS OCCURRED AS DETERMINED BY THE RAILROAD ENGINEER, THE RAILROAD WILL BE IMMEDIATELY NOTIFIED. THE RAILROAD, AT ITS SOLE DISCRETION, SHALL HAVE THE RIGHT TO IMMEDIATELY REQUIRE ALL CONTRACTOR OPERATIONS TO BE CEASED AND DETERMINE WHAT CORRECTIVE ACTION IS REQUIRED. ANY CORRECTIVE ACTION REQUIRED BY THE RAILROAD OR PERFORMED BY THE RAILROAD INCLUDING THE MONITORING OF CORRECTIVE ACTION OF THE CONTRACTOR WILL BE AT PROJECT EXPENSE.

DIMENSIONS AND BOUNDARIES

ALL DIMENSIONS SHOWN ARE HORIZONTAL UNLESS NOTED OTHERWISE. SUPERSTRUCTURE DIMENSIONS SHOWN ARE GIVEN AT A TEMPERATURE OF 70°F.

STRUCTURAL STEEL

1. STRUCTURAL STEEL MEMBERS

A. FRACTURE CRITICAL MEMBERS

1. ALL FRACTURE CRITICAL MEMBERS ARE IDENTIFIED ON THE PLANS.

2. ALL FRACTURE CRITICAL MEMBERS WILL BE FABRICATED IN ACCORDANCE WITH THE FRACTURE CONTROL PLAN STATED IN THE AREMA SPECIFICATIONS, CHAPTER 15, SECTION 14.

3. FABRICATOR SHALL BE CERTIFIED UNDER THE AISC QUALITY CERTIFICATION PROGRAM AS FOLLOWS:

a. FOR WELDED PLATE GIRDERS: MAJOR STEEL BRIDGE CATEGORY.

4. EXCEPT AS NOTED IN THE AREMA FRACTURE CONTROL PLAN, STRUCTURAL STEEL SHALL MEET THE CURRENT REQUIREMENTS OF THE ASTM SPECIFICATIONS FOR STRUCTURAL STEEL, DESIGNATION A-709, GRADE 50 AND THE FOLLOWING SUPPLEMENTARY REQUIREMENTS:

a. S5-F2 (FRACTURE CRITICAL - CHARPY TEST ZONE 2)
b. S29 (FINE AUSTENITIC GRAIN SIZE)
c. S93 (LIMITATION ON WELD REPAIRS)

B. NON-FRACTURE CRITICAL MEMBERS

1. ALL PRIMARY MEMBERS OR COMPONENTS REQUIRING IMPROVED NOTCH TOUGHNESS ARE IDENTIFIED ON THE PLANS.

2. FABRICATOR SHALL BE CERTIFIED UNDER THE AISC QUALITY CERTIFICATION PROGRAM AS FOLLOWS:

a. FOR WELDED PLATE GIRDERS: MAJOR STEEL BRIDGE CATEGORY
b. FOR ROLLED BEAM BRIDGES: SIMPLE STEEL BRIDGE STRUCTURES CATEGORY

STRUCTURAL STEEL, CONT'D

3. STRUCTURAL STEEL SHAPES AND PLATES USED AS PRIMARY MEMBERS OR COMPONENTS SHALL MEET THE CURRENT REQUIREMENTS OF THE ASTM SPECIFICATIONS FOR STRUCTURAL STEEL, DESIGNATION A-709 (GRADE 50), AND THE FOLLOWING SUPPLEMENTARY REQUIREMENTS:

a. S5-T2 (NON-FRACTURE CRITICAL -CHARPY TEST ZONE 2)
b. S29 (FINE AUSTENITIC GRAIN SIZE)

C. OTHER STRUCTURAL STEEL

1. THE FABRICATOR SHALL BE CERTIFIED UNDER THE AISC QUALITY CERTIFICATION PROGRAM, SIMPLE STEEL BRIDGE STRUCTURES CATEGORY.

2. ALL STEEL PLATES SHALL MEET THE CURRENT REQUIREMENTS OF A572, GRADE 50, U.N.O.

2. OTHER MATERIALS

A. HIGH STRENGTH BOLTS SHALL MEET THE CURRENT REQUIREMENTS OF THE ASTM SPECIFICATIONS FOR HIGH STRENGTH BOLTS FOR STRUCTURAL STEEL JOINTS, DESIGNATION A 325.

B. ANCHOR RODS SHALL BE THREADED RODS WITH HEAVY HEX NUT MEETING THE CURRENT REQUIREMENTS OF ASTM F1554.

C. WELDING ELECTRODES FOR ARC WELDING SHALL MEET THE CURRENT REQUIREMENTS OF THE SPECIFICATIONS FOR MILD STEEL ARC-WELDING ELECTRODES SERIES E70, AWS 5.1, LOW HYDROGEN CLASSIFICATION FOR SMAW AND AWS 5.17 FOR SAW.

3. WELDING PROCESSES

A. SUBMERGED ARC WELDING (SAW) OR SHIELD METAL ARC WELDING (SMAW) MAY BE USED FOR GIRDER (FLANGE TO WEB) FABRICATION.

4. BOLTED CONNECTIONS

A. PERMANENT BOLTED CONNECTIONS USING HIGH STRENGTH BOLTS SHALL BE INSTALLED AND TIGHTENED USING THE TURN-OF-THE-NUT METHOD.

B. TENSION CONTROL BOLTS ARE NOT PERMITTED.

5. PAINT

A. ALL STEEL PREPARATION AND PAINTING SHALL BE IN ACCORDANCE WITH ODOT CMS 514. APPLY PRIME COAT IN THE SHOP.

6. SHOP DRAWINGS

A. THE CONTRACTOR'S ATTENTION IS CALLED TO THE REQUIREMENTS FOR SHOP DRAWINGS, CHAPTER 15, PART 1 ARTICLE 1.1.3 SHOP DRAWINGS, AREMA MANUAL FOR RAILWAY ENGINEERING.

B. THE CONTRACTOR SHALL FURNISH AN ELECTRONIC SET IN PDF FORMAT OF DETAILED SHOP DRAWINGS TO THE RAILROAD FOR APPROVAL PRIOR TO STARTING FABRICATION. UNCHECKED DRAWINGS SHALL NOT BE SUBMITTED FOR APPROVAL. AFTER APPROVAL OF SHOP DRAWINGS, THE CONTRACTOR SHALL SUPPLY THE RAILROAD WITH ONE ELECTRONIC SET OF THE APPROVED FABRICATION DRAWINGS.

7. SHOP INSPECTION & TESTING

A. THE FABRICATOR SHALL FURNISH COPIES OF CERTIFIED MILL INSPECTION REPORTS TO THE RAILROAD FOR ALL STRUCTURAL STEEL REQUIRING IMPROVED NOTCH TOUGHNESS.

B. THE FABRICATOR SHALL MEET THE REQUIREMENTS OF THE AREMA FRACTURE CONTROL PLAN DESCRIBED IN CHAPTER 15, PART 1, ARTICLE 1.14 FOR ALL MEMBERS AND COMPONENTS DESIGNATED AS FRACTURE CONTROL.

C. WELDING INSPECTION SHALL VERIFY THAT ALL WELDS AND WELDING PROCEDURES MEET THE REQUIREMENTS OF THE CURRENT AMERICAN WELDING SOCIETY (A.W.S.) BRIDGE WELDING CODE, D15.

D. ALL WELDS SHALL BE INSPECTED VISUALLY AND BY USE OF NONDESTRUCTIVE TESTING. ALL NONDESTRUCTIVE TESTING SHALL BE PERFORMED BY THE FABRICATOR AND WITNESSED BY THE RAILROAD'S INSPECTOR.

NO.	DATE	DESCRIPTION
0	2/25/19	RFC

ISSUE RECORD

DESIGN AGENCY
Michael Baker INTERNATIONAL
1111 SUPERIOR AVE E., SUITE 2300, CLEVELAND, OH 44114

DESIGNED	DRAWN	REVIEWED	DATE
LJH	SSW	JWB	11/5/18
CHECKED	REVISED	STRUCTURE FILE NUMBER	
LPC		1801519	

RECORD PLANS

GENERAL NOTES (1 OF 5)
CUY-010-2039
NORFOLK SOUTHERN RAILROAD OVER OH-10

RECORD PLANS

CUY-IR490/SR010-2.09/19.28
PID No. 96833

RFC SUBMITTAL
BU-22 - NORFOLK SOUTHERN BRIDGE OVER OH-10
...\Sheets\010_2039C_SN601.dgn 3/18/2019 1:35:43 PM ccummings

STRUCTURAL STEEL, CONT'D

E. COPIES OF ALL WELD INSPECTIONS AND NONDESTRUCTIVE TESTING REPORTS SHALL BE FURNISHED TO THE RAILROAD.

F. THE FABRICATOR SHALL PERFORM THE FOLLOWING WELD INSPECTION TESTING:

1. ALL TRANSVERSE TENSION GROOVE WELDS IN FCM MEMBERS, WHEN ALLOWED BY THE ENGINEER, SHALL BE RT AND UT TESTED 100%. IN NON-FCM COMPONENTS OF FCM'S ALL TRANSVERSE GROOVE WELDS SHALL BE RT OR UT TESTED 100%.

2. ALL FLANGE TO WEB WELDS SHALL BE TESTED ON BOTH SIDES IN ACCORDANCE WITH AMERICAN WELDING SOCIETY (A.W.S.) BRIDGE WELDING CODE, D1.5/2013, CLAUSE 6.7.

3. ALL FLANGE TO WEB FILLET WELDS, WHEN ALLOWED BY THE ENGINEER, ARE TO BE MAGNETIC PARTICLE TESTED 100%.

4. TEN PERCENT (10%) OF ALL WELDS NOT MENTIONED ABOVE SHALL BE MAGNETIC PARTICLE TESTED.

STRUCTURAL STEEL PAINT

STEEL GIRDERS AND CROSS FRAMES SHALL BE COATED WITH THREE-COAT PAINT SYSTEM IN ACCORDANCE WITH ODOT C&MS 514.

COLOR:

EXTERIOR GIRDER - BROWN - FEDERAL STANDARD 595B - #20045 OR #20059 (THE COLOR OF WEATHERING STEEL)

INTERIOR GIRDER - LIGHT TAN - FEDERAL STANDARD 595C - #27769

PAINT SYSTEM PRIME COATING SHALL BE SHOP APPLIED AND THE REMAINING COATINGS SHALL BE FIELD APPLIED.

STRUCTURE DRAINAGE, MISC.: BRIDGE DECK DRAINAGE SYSTEM

INCLUDE ALL 6" INNER DIAMETER DUCTILE IRON PIPE DOWNSPOUTS, INCLUDING SPECIALS, HORIZONTAL CONDUCTOR PIPES, BRACKETS, PIPE HANGER ASSEMBLIES, TEES, SCUPPERS, WYES, ELBOWS, AND U-BOLTS FOR PAYMENT WITH THIS ITEM.

CAST-IN-PLACE CONCRETE

1. GENERAL

A. CONCRETE SHALL BE IN ACCORDANCE WITH THE CURRENT NORFOLK SOUTHERN CORPORATION SPECIFICATIONS FOR CAST-IN-PLACE CONCRETE. REFER TO NORFOLK SOUTHERN'S PUBLIC PROJECTS MANUAL APPENDIX H.4.2 FOR SPECIFICATIONS FOR CAST-IN-PLACE CONCRETE.

B. EXCEPT AS OTHERWISE SPECIFIED HEREAFTER THE CURRENT AMERICAN RAILWAY ENGINEERING AND MAINTENANCE-OF-WAY ASSOCIATION (AREMA) MANUAL FOR RAILWAY ENGINEERING (RECOMMENDED PRACTICE), CHAPTER 8 - CONCRETE STRUCTURES AND FOUNDATIONS, SHALL APPLY TO ALL WORK UNDER THIS SECTION.

2. STRENGTH, PROPORTIONS AND MIXES

A. CEMENT, UNLESS OTHERWISE SPECIFIED, SHALL CONFORM TO THE FOLLOWING:

1. CEMENT SHALL BE PORTLAND CEMENT, TYPE 1 OR TYPE 1A, CONFORMING TO THE REQUIREMENTS OF ASTM DESIGNATION C150.

B. MINIMUM COMPRESSIVE STRENGTH AT 28 DAYS SHALL BE 4000 PSI, UNLESS A HIGHER COMPRESSIVE STRENGTH IS INDICATED IN THE PLANS.

C. MINIMUM CEMENT CONTENT SHALL BE 6.50 BAGS/CY (610 LBS/CY).

D. FLY ASH, SILICAFUME AND/OR SLAG CEMENT AND ANY OTHER ADMIXTURES, APPROVED BY THE ENGINEER, SHALL BE IN ADDITION TO THE MINIMUM CEMENT CONTENT INDICATED ABOVE, NOT IN LIEU OF CEMENT.

E. NOMINAL SIZE OF COARSE AGGREGATE SHALL BE 1" - NO. 4 (SIZE 57).

F. CONCRETE SHALL BE AIR-ENTRAINED BY THE USE OF AN AIR ENTRAINING ADMIXTURE CONFORMING TO REQUIREMENTS OF ASTM DESIGNATION, C260, OR BY THE USE OF AIR-ENTRAINING PORTLAND CEMENT MEETING THE REQUIREMENTS OF ASTM SPECIFICATION C150. THE CONCRETE SHALL HAVE AN AIR CONTENT BETWEEN 4.0% AND 6.0%.

G. ADMIXTURES, EXCEPT AIR-ENTRAINING AGENTS, USED TO ALTER THE NORMAL PROPERTIES OF CONCRETE FOR DENSIFYING, DISPERSING, RETARDING, ACCELERATING, PLASTICIZING, COLORING, OR WATERPROOFING, SHALL BE USED ONLY UPON WRITTEN PERMISSION OF THE ENGINEER.

CAST-IN-PLACE CONCRETE, CONT'D

H. TESTING: COMPRESSION TESTS AND FIELD TESTS WILL BE REQUIRED AS SPECIFIED IN THE AREMA MANUAL, CHAPTER 8, PART 1. THE CONTRACTOR SHALL FURNISH ALL TEST MATERIALS AND TEST CYLINDER MOLDS, SHALL PERFORM ALL WORK TO MAKE AND CURE THE TEST CYLINDERS, AND AFTER PROPER CURING, SHALL DELIVER THE TEST CYLINDERS TO AN INDEPENDENT TESTING LABORATORY WHERE THEY SHALL BE TESTED AT THE CONTRACTOR'S EXPENSE. THE TEST RESULTS SHALL BE FURNISHED DIRECTLY TO THE ENGINEER IN WRITING, BY THE TESTING LABORATORY, ON A STANDARD TESTING REPORT FORM. NOT LESS THAN FOUR TEST CYLINDERS SHALL BE MADE FOR EACH TWENTY CUBIC YARDS, OR FRACTION THEREOF, OF CAST-IN-PLACE CONCRETE. ONE PAIR OF CYLINDERS SHALL BE TESTED AT 7 DAYS AND THE SECOND PAIR AT 28 DAYS.

I. SLUMP RANGE SHALL BE TWO TO FOUR INCHES PRIOR TO THE ADDITION OF HIGH RANGE WATER REDUCING ADMIXTURES AT THE SITE. PUMPED CONCRETE SHOULD HAVE A SLUMP RANGE OF 5" TO 6" PRIOR TO PUMPING. AT LEAST ONE SLUMP TEST SHALL BE MADE FOR EACH TRUCKLOAD OF CONCRETE DELIVERED TO THE PROJECT FOR INCLUSION IN THE WORK. A RECORD OF THE AMOUNT OF SLUMP SHALL BE MADE AND FURNISHED TO THE ENGINEER.

3. REINFORCING STEEL

A. REINFORCING STEEL BARS SHALL BE INTERMEDIATE GRADE, NEW BILLET STEEL, CONFORMING TO ASTM DESIGNATION A615, GRADE 60. REINFORCING BARS SHALL BE BENT COLD IN THE SHOP OR IN THE FIELD AROUND A PIN NOT LESS THAN 6 TIMES THE DIAMETER OF THE BAR. REINFORCING PARTIALLY EMBEDDED IN CONCRETE OR IN MORTAR IN DOWEL HOLES SHALL NOT BE FIELD BENT, EXCEPT AS PERMITTED BY THE ENGINEER.

B. EPOXY COATED REINFORCING BARS, WHERE SPECIFIED OR SHOWN ON THE PLANS, SHALL CONFORM TO ASTM A775, "STANDARD SPECIFICATION FOR EPOXY-COATED REINFORCING BARS". EPOXY COATED REINFORCING BARS SHALL BE TIED WITH PLASTIC OR EPOXY COATED WIRES OR APPROVED PLASTIC CLIPS, AND SHALL BE SET ON PLASTIC OR EPOXY COATED WIRE CHAIRS.

C. EPOXY GROUT FOR DOWELS

1. EPOXY ADHESIVE SHALL CONFORM TO ASTM C881 OR AASHTO M235 SPECIFICATIONS. THE CONTRACTOR SHALL HAVE THE OPTION OF USING THE FOLLOWING EPOXY ADHESIVE TO SET REINFORCING DOWELS:

a.) SIKADUR 32, HI-MOD	SIKA CORP, LUNDHURST, NJ TEL. (201) 933-8800
b.) MASTERFLOW-MP	MASTER BUILDERS, CLEVELAND, OH TEL. (800) 433-9517
c.) DURALITH GEL	TAMMS INDUSTRIES, INC. KIRKLAND, IL TEL. (800) 862-2667
d.) POLYGROUT	TAMMS INDUSTRIES, INC. KIRKLAND, IL TEL. (800) 862-2667
c.) DURALITH GEL	HILTI, INC. TULSA, OK TEL. (866) 445-8827

EPOXY ADHESIVE SHALL BE SET IN ACCORDANCE WITH THE MANUFACTURER'S RECOMMENDATIONS. THE LISTED ADHESIVES SHALL BE USED WHEN THE TEMPERATURE FOR THE PREVIOUS 48 HOURS HAS BEEN ABOVE 40°F, WITH TEMPERATURE FORECASTS TO REMAIN ABOVE 40°F FOR THE NEXT 12 HOURS. FOR TEMPERATURES BELOW 40°F, THE CONTRACTOR MAY SUBMIT TO THE ENGINEER A COLD WEATHER GROUTING PRODUCT FOR CONSIDERATION.

2. EPOXY GROUT MATERIALS SHALL NOT BE DILUTED WITH SOLVENTS.

3. ALL FREE WATER SHALL BE REMOVED FROM DOWEL HOLES BY AN AIR JET OR BY VACUUM BEFORE PLACING EPOXY GROUT. EPOXY GROUT SHALL BE POURED INTO THE DOWEL IN SUFFICIENT QUANTITY TO COMPLETELY FILL THE HOLE WHEN THE DOWEL IS INSERTED. THE DOWEL SHALL BE INSERTED IN THE LIQUID GROUT AND AGITATED TO COMPLETELY WET THE PERIMETER OF THE DOWEL AND TO COMPLETELY FILL THE ANNULAR SPACE AROUND THE DOWEL. A SMALL AMOUNT OF GROUT MAY BE ADDED IF THE ANNULAR SPACE IS NOT FILLED FLUSH WITH THE SURROUNDING SURFACE. GROUTED DOWELS SHALL NOT BE DISTURBED FOR AT LEAST 12 HOURS AFTER INSTALLATION.

D. GROUT FOR ANCHOR RODS

1. GROUT FOR ANCHOR RODS SHALL BE A CEMENT-BASED NON-SHRINK GROUT WITH EXTENDED WORKING TIME. THE CONTRACTOR SHALL HAVE THE OPTION OF USING THE FOLLOWING MATERIAL OR APPROVED EQUAL:

a.) MASTERFLOW 928 - BASF

CAST-IN-PLACE CONCRETE, CONT'D

2. EPOXY GROUT MATERIALS SHALL NOT BE DILUTED WITH SOLVENTS.

3. ALL FREE WATER SHALL BE REMOVED FROM DOWEL HOLES BY AN AIR JET OR BY VACUUM BEFORE PLACING EPOXY GROUT. EPOXY GROUT SHALL BE POURED INTO THE DOWEL IN SUFFICIENT QUANTITY TO COMPLETELY FILL THE HOLE WHEN THE DOWEL IS INSERTED. THE DOWEL SHALL BE INSERTED IN THE LIQUID GROUT AND AGITATED TO COMPLETELY WET THE PERIMETER OF THE DOWEL AND TO COMPLETELY FILL THE ANNULAR SPACE AROUND THE DOWEL. A SMALL AMOUNT OF GROUT MAY BE ADDED IF THE ANNULAR SPACE IS NOT FILLED FLUSH WITH THE SURROUNDING SURFACE. GROUTED DOWELS SHALL NOT BE DISTURBED FOR AT LEAST 12 HOURS AFTER INSTALLATION.

D. GROUT FOR ANCHOR RODS

1. GROUT FOR ANCHOR RODS SHALL BE A CEMENT-BASED NON-SHRINK GROUT WITH EXTENDED WORKING TIME. THE CONTRACTOR SHALL HAVE THE OPTION OF USING THE FOLLOWING MATERIAL OR APPROVED EQUAL:

a.) MASTERFLOW 928 - BASF

2. GROUT SHALL BE SET IN ACCORDANCE WITH THE MANUFACTURER'S RECOMMENDATIONS. FOR TEMPERATURES BELOW 45°F, THE CONTRACTOR MAY SUBMIT TO THE ENGINEER A COLD WEATHER GROUTING PRODUCT OR PROCEDURE FOR CONSIDERATION.

3. FORMED ANCHOR BOLT BLOCKOUTS SHALL BE SANDBLASTED, WATERBLASTED OR GROUND TO REMOVE LAITANCE.

4. ALL FREE WATER SHALL BE REMOVED FROM ANCHOR ROD BLOCKOUTS BY AN AIR JET OR BY VACUUM BEFORE PLACING GROUT. GROUT SHALL BE POURED INTO THE ANCHOR BLOCKOUT IN SUFFICIENT QUANTITY TO COMPLETELY FILL THE HOLE WHEN THE ANCHOR ROD IS INSERTED. THE ANCHOR ROD SHALL BE INSERTED IN THE LIQUID GROUT AND AGITATED TO COMPLETELY WET THE PERIMETER OF THE ROD AND TO COMPLETELY FILL THE ANNULAR SPACE AROUND THE ROD. A SMALL AMOUNT OF GROUT MAY BE ADDED IF THE ANNULAR SPACE IS NOT FILLED FLUSH WITH THE SURROUNDING SURFACE. GROUTED ANCHOR RODS SHALL NOT BE DISTURBED FOR AT LEAST 12 HOURS AFTER INSTALLATION.

4. CONSTRUCTION JOINTS

A. CONSTRUCTION JOINTS SHALL BE MADE ONLY WHERE SHOWN ON THE PLANS, UNLESS OTHERWISE APPROVED BY THE ENGINEER, AND SHALL BE ADEQUATELY KEYED.

5. FORMED SURFACE FINISH

A. ALL UNFORMED SURFACES SHALL BE CONSTRUCTED TO LINES AND CONTOURS SHOWN ON THE DRAWINGS WITH A WOOD OR HARD RUBBER FLOAT FINISH. FORMED SURFACES SHALL BE MADE WITH PLYWOOD FACED WOOD FORMS OR WITH STEEL FACED FORMS.

6. CURING

A. CONCRETE SHALL BE PROTECTED AS REQUIRED BY AREMA SPECIFICATION, CHAPTER 8, SECTION 1.17, FOR A MINIMUM OF 7 DAYS. MEMBRANE CURING COMPOUNDS ARE PERMITTED, ON ALL CAST-IN-PLACE CONCRETE SURFACES EXCEPT THOSE THAT WILL ABUT OTHER NEW CONCRETE. CURING OF SUCH ABUTTING SURFACES SHALL BE BY WET CURING METHODS. MEMBRANE CURING SHALL BE COMPATIBLE WITH THE SPECIFIED CONCRETE SURFACE SEALER, OR THE MEMBRANE CURING COMPOUND SHALL BE REMOVED TO PROMOTE ADHESION OF THE SEALER TO THE CONCRETE.

7. SEALER

A. CONCRETE SEALANT SHALL BE PER ODOT CMS 512.
COLOR: LIGHT TAN - FEDERAL STANDARD 595C #27769

CONCRETE, BRIDGE DECK (PARAPET), AS PER PLAN

INCLUDE SUPERSTRUCTURE BARRIER CONCRETE WITH THIS ITEM.

A RUBBED FINISH SHALL COVER ALL CONCRETE PLACED FOR PARAPET, AS PER CMS 511.18 (B). IMMEDIATELY AFTER REMOVING FORMS, CLEAN, DAMPEN AND FILL WITH MORTAR ALL CAVITIES PRODUCED BY FORM TIES, HONEYCOMB SPOTS, BROKEN CORNERS OR EDGES, AIR ENTRAINMENT OR BUG HOLES, AND OTHER DEFECTS.

NO.	DATE	DESCRIPTION
0	2/25/19	RFC

ISSUE RECORD

RFC SUBMITTAL
BU-22 - NORFOLK SOUTHERN BRIDGE OVER OH-10
...\Sheets\010_2039C_SN602.dgn 3/18/2019 1:35:57 PM ccummings

DESIGN AGENCY
Michael Baker INTERNATIONAL
1111 SUPERIOR AVE E, SUITE 2300, CLEVELAND, OH 44114

DESIGNED	DRAWN	REVIEWED	DATE
LJH	SSW	JWB	11/5/18
CHECKED	REVISED	STRUCTURE FILE NUMBER	
LPC		1801519	

RECORD PLANS

GENERAL NOTES (2 OF 5)
CUY-010-2039
NORFOLK SOUTHERN RAILROAD OVER OH-10
RECORD PLANS

CUY-IR490/SR010-2.09/19.28
PID No. 96833
RECORD PLANS

CONCRETE, BRIDGE DECK (PARAPET), AS PER PLAN, CONT'D

CONCRETE PARAPETS: AS SOON AS A CONCRETE SAW CAN BE OPERATED WITHOUT DAMAGING THE FRESHLY PLACED CONCRETE, SAWCUT 1 1/4" DEEP CONTROL JOINTS INTO THE PERIMETER OF THE CONCRETE PARAPET STARTING AND ENDING AT THE ELEVATION OF THE CONCRETE DECK. PLACE THE SAWCUTS AS SHOWN ON SHEET 37/47. USE AN EDGE GUIDE, FENCE, OR JIG TO ENSURE THAT THE CUT JOINT IS STRAIGHT, TRUE, AND ALIGNED ON ALL FACES OF THE PARAPET. THE JOINT WIDTH SHALL BE THE WIDTH OF THE SAW BLADE, A NOMINAL WIDTH OF 1/4 INCH. SEAL THE PERIMETER OF THE DEFLECTION CONTROL JOINT TO A MINIMUM DEPTH OF 1 INCH WITH A POLYURETHANE OR POLYMERIC MATERIAL CONFORMING TO ASTM C920, TYPE S. LEAVE THE BOTTOM 1/2 INCH OF THE INSIDE AND OUTSIDE FACE UNSEALED TO ALLOW WATER TO ESCAPE.

COLOR: LIGHT TAN - FEDERAL STANDARD 595C #27769

PROTECTION OF UTILITIES

THE CONTRACTOR IS REMINDED THAT ALL THE EXISTING COMPONENTS AND SYSTEMS TO REMAIN IN USE DURING AND/OR AFTER THIS PROJECT REQUIRE PROTECTION. THESE ITEMS INCLUDE, BUT ARE NOT LIMITED TO:

WATER MAINS
GAS MAINS
ELECTRICAL/TELEPHONE CONDUITS AND OVERHEAD LINES
SIGNALS
SEWER

IT IS THE CONTRACTOR'S RESPONSIBILITY TO PROTECT EXISTING SYSTEMS AND COMPONENTS FOR THE DURATION OF THE CONTRACT.

OVERHEAD POWER LINES:
THE CONTRACTOR IS RESPONSIBLE FOR MAKING HIS OWN DETERMINATION AS TO THE LOCATION OF THESE UTILITIES AS MAY BE NECESSARY TO AVOID DAMAGE THERETO DURING CONSTRUCTION AND ERECTION OF STRUCTURES.

UTILITY LINES:
THE CONTRACTOR AND UTILITY (IES) ARE TO COOPERATE BY ARRANGING THEIR WORK IN SUCH A MANNER THAT INCONVENIENCE TO EITHER WILL BE HELD TO A MINIMUM.

COFFERDAMS AND EXCAVATION BRACING, AS PER PLAN

PLANS AND SHOP DRAWINGS FOR THE TEMPORARY SHEETING AND BRACING OF EXCAVATION WEST OF THE PHASE 1 RAILROAD TRACKS SHALL BE APPROVED BY NORFOLK SOUTHERN. WHEN CONSTRUCTING A DESIGN FOR TEMPORARY SUPPORT OF EXCAVATION, PREPARE AND PROVIDE PLANS IN ACCORDANCE WITH C&MS 501.05 AND NORFOLK SOUTHERN'S PUBLIC PROJECTS MANUAL.

CONDUIT SUPPORTS

CONSTRUCT CONDUIT SUPPORTS AT THE LOCATIONS SHOWN IN THE PLANS. FURNISH AND INSTALL A STEEL EXPANSION JOINT. INSTALL CONDUIT AND STEEL EXPANSION JOINT PER THE MANUFACTURER'S SPECIFICATIONS.

UTILITY BLOCKOUT BACKWALL PENETRATIONS

FORMED UTILITY BLOCKOUT ABUTMENT BACKWALL PENETRATIONS SHALL USE 1" WAX FILLER, FILL COAT #6 AVAILABLE FROM THE TRENTON CORPORATION, 7700 JACKSON ROAD, ANN ARBOR, MI 48103. PHONE NUMBER (734)424-3600 OR APPROVED EQUAL. THE MATERIAL AND INSTALLATION SHALL CONFORM TO THE MANUFACTURER'S SPECIFICATIONS.

SEE BU-22A PLANS FOR CONTINUATION OF CARRIER PIPE ALONG THE TRACK.

STRUCTURAL STEEL EXPANSION JOINT, AS PER PLAN

CONSTRUCT STRUCTURAL STEEL EXPANSION JOINTS IN ACCORDANCE TO CMS ITEM 516 AND THE FOLLOWING ADDITIONS:

JOINT SEAL. FURNISH MATERIAL CONFORMING TO CMS 705.11. THE SEAL CONFIGURATION SHOULD BE SIMILAR TO THE DETAILS SHOWN HEREIN. ACCEPTED MANUFACTURERS ARE, D.S. BROWN (MODEL J-500), WATSON-BOWMAN-ACME (MODEL 125FW) OR AN APPROVED EQUIVALENT. INSTALL THE SEAL ACCORDING TO THE MANUFACTURER'S SPECIFICATIONS AND UNDER THE SUPERVISION OF THE MANUFACTURER'S DESIGNATED REPRESENTATIVE.

JOINTS IN SEALS. FURNISH SEALS IN ONE CONTINUOUS PIECE UNLESS OTHERWISE APPROVED BY THE ENGINEER.

FURNISH AND INSTALL 1/2" X 29 1/2", 1/2" X 18", 1/2" X 22", AND 1/2" X 23 1/2" GALVANIZED MASONRY PLATES AS SHOWN IN THE PLANS. ATTACH MASONRY PLATES TO DECK, BACKWALL, AND BARRIER USING 3/4" DIA. X 6" A-325 ANCHOR BOLTS SET IN FORMED HOLES AND GROUTED IN PLACE OR APPROVED EQUAL AS SHOWN IN THE PLANS. PROVIDE 1 1/4" DIA. COUNTER SUNK (CSK.) HOLES IN THE MASONRY PLATES AND FIELD WELD PER THE DETAILS IN THE PLANS.

UNCLASSIFIED EXCAVATION, AS PER PLAN

UNCLASSIFIED EXCAVATION SHALL BE IN ACCORDANCE WITH CMS ITEM 503 EXCEPT THAT THE BACKFILL MATERIAL SHALL BE MATERIAL CONFORMING TO CMS 703.17 (CMS 304 MATERIAL) AND MEET THE COMPACTION REQUIREMENTS OF CMS 304.05. IN ADDITION, THE BACKFILL SHALL BE PLACED AND COMPACTED IN 6" LIFTS.

POROUS GRANULAR BACKFILL WITH FILTER FABRIC

A. THE CONTRACTOR SHALL BACKFILL WITH POROUS GRANULAR MATERIAL WITH FILTER FABRIC AS INDICATED IN THE PLANS AND BY THE ENGINEER. THE TOP OF POROUS GRANULAR BACKFILL IN THE SIDE SLOPES SHALL BE 12 INCHES BELOW FINAL GRADE. THE TOP 6 INCHES (6") SHALL BE BACKFILLED WITH IMPERVIOUS MATERIAL COMPACTED 95% OF STANDARD PROCTOR DENSITY. WHERE APPLICABLE, BACKFILL SHALL BE CARRIED UP APPROXIMATELY EVEN ON ALL SIDES OF THE STRUCTURE.

B. POROUS GRANULAR BACKFILL MATERIAL SHALL BE HARD, DURABLE PIECES OF STONE OR GRAVEL MEETING THE FOLLOWING GRADATIONS:

SIEVE SIZE: U.S. STANDARD SQUARE MESH	PERCENT BY WEIGHT PASSING
3"	100
1"	95±5
NO. 4	75±25
NO.16	55±25
NO. 50	10±10
NO. 200	2±2

PRE-CONSTRUCTION SURVEY, VIBRATION MONITORING, AND VIDEO INSPECTION OF SEWERS

CONDUCT A PRE-CONSTRUCTION SURVEY ACCORDING TO THE SETTLEMENT AND VIBRATION MONITORING PLAN OF BUILDINGS, STRUCTURES, UTILITIES, AND CRITICAL LOCATIONS WITHIN THE LIMITS DETERMINED BY THE DBT VIBRATION SPECIALIST. PERFORM A PRE-CONSTRUCTION VIDEO INSPECTION ACCORDING TO CM&S 611 OF ALL SEWERS WITHIN THE INFLUENCE ZONES OF CONSTRUCTION. PERFORM SETTLEMENT AND VIBRATION MONITORING ACCORDING TO THE SETTLEMENT AND VIBRATION MONITORING PLAN DURING CONSTRUCTION. AFTER CONSTRUCTION IS SUBSTANTIALLY COMPLETE, PERFORM A SECOND VIDEO INSPECTION OF THE SEWERS. PROVIDE RECORDINGS OF THE VIDEOS TO THE DEPARTMENT AND MAINTAINING AGENCY FOR REVIEW.

ITEM 607 - VANDAL PROTECTION FENCE, 8' STRAIGHT, COATED FABRIC AS PER PLAN

INSTALL VANDAL PROTECTION FENCE ACCORDING TO STD. CONSTRUCTION DRAWING VPF-1-90 AND C&MS 607, EXCEPT AS MODIFIED BELOW.

POSTS, PLATES, TIE WIRES, CAULK AND ADDITIONAL VISIBLE HARDWARE SHALL BE COLOR BLACK (FEDERAL STD. 595C #17038). FENCE FABRIC SHALL BE BLACK VINYL-COATED, CHAIN LINK STYLE. MOUNT FENCING TO TOP OF RETAINING WALL WITH CAST-IN-PLACE ANCHORS.

AT THE TOP OF THE WALL, MAKE THE FENCE FABRIC CONTINUOUS BETWEEN THE FENCE ON THE WALL AND THE FENCE ON THE BRIDGE ABUTMENT.

PIPE UNDERDRAIN

1. UNDERDRAIN PIPES SHALL BE PERFORATED BITUMINOUS COATED CORRUGATED METAL PIPE. PVC IS NOT ALLOWED.

2. GEOTEXTILE FABRIC. FABRIC CONSIDERED FOR USE UNDER THIS SECTION SHALL CONSIST OF STABILIZED NONWOVEN FILAMENTS OF POLYESTER. NONWOVEN FABRIC SHALL BE NEEDLE PUNCHED; NO RESIN OR HEAT BONDING SHALL BE ALLOWED. THE FILAMENTS MUST BE DIMENSIONALLY STABLE (I.E. FILAMENTS MUST MAINTAIN THEIR RELATIVE POSITION WITH RESPECT TO EACH OTHER) AND BE RESISTANT TO DELAMINATION. THE FILAMENTS MUST BE FREE FROM ANY CHEMICAL TREATMENT OR COATING THAT MIGHT SIGNIFICANTLY REDUCE POROSITY AND PERMEABILITY. THE FABRIC SHALL MEET OR EXCEED THE FOLLOWING REQUIREMENTS:

WEIGHT (OZ. / SQ. YD.)	3.5
GRAB STRENGTH (LBS) (ASTM D1682)	100*
GRAB ELONGATION (%) (ASTM D1682)	20*
EQUIVALENT OPENING SIZE (US STANDARD SIEVE NO.) (CORPS OF ENGINEERS) (CW 02215.77)X	30 NONWOVEN**

*FABRICS SHALL BE TESTED WET.

**MANUFACTURER'S CERTIFICATION OF FABRIC TO MEET REQUIREMENT.

WATERPROOFING, MISC.: WATERPROOFING AND DAMPPROOFING

WATERPROOFING AND DAMPPROOFING

A. WATERPROOFING OR DAMPPROOFING OF CONCRETE SURFACES BELOW THE GROUND LINE SHALL BE AS SHOWN ON THE PLANS.

WATERPROOFING, MISC.: WATERPROOFING AND DAMPPROOFING, CONT'D

B. SURFACES TO BE TREATED SHALL BE CLEAN AND DRY.

C. CONCRETE SURFACES SHALL HAVE BEEN CURED A MINIMUM OF 7 DAYS FOR STANDARD CONCRETE AND 3 DAYS FOR HIGH-EARLY STRENGTH CONCRETE, RESPECTIVELY, BEFORE BEING WATERPROOFED OR DAMPPROOFED.

D. DAMPPROOFING SHALL CONFORM TO THE FOLLOWING:

1. ALL NEW CAST-IN-PLACE CONCRETE AND EXISTING CONCRETE EXPOSED DURING THE WORK WHICH WILL BE IN CONTACT WITH BALLAST OR BACKFILL AT THE COMPLETION OF THE WORK SHALL BE DAMPPROOFED.

2. DAMPPROOFING MASTIC SHALL BE A COLD APPLIED, LIGHT TROWEL GRADE OF AN ASPHALTIC BITUMINOUS BINDER, IMPREGNATED WITH MINERAL FILLERS AND INORGANIC FIBERS. THE MASTIC SHALL BE UNIFORMLY TROWELED OVER THE CONCRETE SURFACE WITHOUT HOLES, SKIPS, OR HOLIDAYS AT THE APPROXIMATE RATE OF 5 GALLONS PER 100 SF. THE DAMPPROOFING MASTIC SHALL BE ONE OF THE FOLLOWING OR AN APPROVED EQUAL:

KARNACK PRODUCT NO. 920
KARNACK CHEMICAL CORPORATION
CLARK, NJ 07066

TEX-MASTIC PRODUCT NO. 712
JP PETROLEUM PRODUCTS, INC.
DALLAS, TX 75208

3. PROTECTION BOARD TO BE PLACED OVER THE MASTIC DAMPPROOFING SHALL BE A STANDARD PROTECTION COURSE, APPROXIMATELY 5/8" THICK, COMPOSED OF A MIXTURE OF BITUMENS AND MINERAL FIBERS AND SANDWICHED BETWEEN TWO LINERS. PROTECTION BOARD SHALL BE CAREFULLY BUTTED AT THE EDGES TO MAKE A COMPLETE PROTECTION COURSE FOR THE DAMPPROOFING MASTIC. PROTECTION BOARD SHALL BE ONE OF THE FOLLOWING OR AN APPROVED EQUAL:

VIBRAFLEX
W.R. MEADOWS, INC.
ELGIN, IL 60120

TEX-MASTIC PROTECTS BOARD
JP PETROLEUM PRODUCTS, INC.
DALLAS, TX 75208

ITEM 512 - SEALING OF CONCRETE SURFACES (EPOXY-URETHANE):

ALL EXPOSED CONCRETE SURFACES OF THE ABUTMENT, INCLUDING WINGWALLS AND LIMITS OF THE CONCRETE SUPERSTRUCTURE, AS PER PLAN DETAILS, SHALL BE SEALED WITH AN EPOXY-URETHANE SEALER.

WATERPROOFING, MISC.: COLD-SPRAY APPLIED WATERPROOFING

DECK WATERPROOFING:
THE MEMBRANE SHALL BE 100% REACTIVE SPRAY APPLIED MATERIAL.

FURNISH LABOR, PRODUCTS AND EQUIPMENT REQUIRED FOR THE APPLICATION OF A SEAMLESS, SPRAY ELASTOMER COATING SYSTEM TO CONCRETE AND METAL SURFACES. THE COATING SYSTEM SHALL BE A SPRAY-APPLIED, 100% SOLIDS, FAST-CURE, HIGH-BUILD SYSTEM MEETING AREMA COLD-SPRAY APPLIED WATERPROOFING REQUIREMENTS CHAPTER 8, SECTION 29. PRIMER MAY BE REQUIRED.

FOR A PRODUCT TO BE ACCEPTED, IT MUST MEET ALL TESTS REQUIRED BY AREMA CHAPTER 8, SECTION 29 WITHIN THE MANUFACTURER'S RECOMMENDED THICKNESS.

TOP SURFACE OF THE DECK AND SIDE WALLS ARE TO BE PROTECTED WITH A COLD SPRAY MEMBRANE WATERPROOFING SYSTEM. APPROVED WATERPROOFING SYSTEMS INCLUDE:

BRIDGE DECK MEMBRANE (TM) WATERPROOFING SYSTEM, MANUFACTURED BY:
BRIDGE PRESERVATION
686 S. ADAMS STREET
KANSAS CITY, KANSAS 66105

OR APPROVED EQUAL.

SURFACES THAT RECEIVE SPRAYED WATERPROOFING MEMBRANE SHALL BE THOROUGHLY CLEANED AS PER SSPC-SP10.

THE MINIMUM THICKNESS FOR THE FINISH COAT SHALL NOT BE LESS THAN 120DFT.

SPRAY APPLICATION SHALL BE CERTIFIED BY THE MANUFACTURER WITH A COPY SUBMITTED TO THE ENGINEER FOR APPROVAL.

WATERPROOFING MEMBRANE SHALL BE APPLIED IN THE FIELD BY THE CONTRACTOR.

NO.	DATE	DESCRIPTION
1	2020-01-10	DC030
0	2019-02-25	RFC

ISSUE RECORD

DESIGN AGENCY
Michael Baker INTERNATIONAL
1111 SUPERIOR AVE E, SUITE 2300, CLEVELAND, OH 44114

DESIGNED	DRAWN	REVIEWED	DATE
LJH	SSW	JWB	11/5/18
CHECKED	REVISED	STRUCTURE FILE NUMBER	
LPC		1801519	

RECORD PLANS

GENERAL NOTES (3 OF 5)
CUY-010-2039
NORFOLK SOUTHERN RAILROAD OVER OH-10

RECORD PLANS

CUY-IR490/SR010-2.09/19.28
PID No. 96833

RECORD PLANS

WATERPROOFING, MISC.: COLD-SPRAY APPLIED WATERPROOFING, CONT'D

PRODUCTS SHALL BE MIXED, STORED AND APPLIED PER THE MANUFACTURER'S RECOMMENDATIONS. TEMPORARILY COVER DECK DRAIN LOCATIONS.
THE FOLLOWING ITEMS SHALL MEET THE REQUIREMENTS OF AREMA CHAPTER 8, SECTION 29 AND/OR THE MANUFACTURER'S REQUIREMENTS, WHICHEVER CRITERIA IS MORE STRINGENT:

CONCRETE AND METAL SURFACES PREPARATION
FIELD QUALITY CONTROL
REPAIR OF AREAS WITH DEFICIENT THICKNESS OR PINHOLES

ITEM 512 - SEALING OF CONCRETE SURFACES, AS PER PLAN, PERMANENT GRAFFITI PROTECTION

APPLY A PERMANENT GRAFFITI COATING QUALIFIED ACCORDING TO SUPPLEMENT 1083 THAT IS COMPATIBLE WITH THE CONCRETE SEALER OVER WHICH IT IS APPLIED. PROVIDE A COATING THAT MEETS THE REQUIREMENTS LISTED BELOW. APPLY THE GRAFFITI COATING IN ACCORDANCE WITH THE MANUFACTURER'S PRINTED INSTRUCTIONS.

A. THE MATERIAL SHALL BE A SINGLE COMPONENT, RTV (ROOM TEMPERATURE VULCANIZED), NEUTRAL MOISTURE CURE, PERMANENT (NON-SACRIFICIAL), TYPE III (WATER CLEANABLE) POLYSILOXANE (SILICONE) ANTI-GRAFFITI COATING, FREE OF ANY WAXES, EPOXIES, OR POLYURETHANE COMPONENTS.

B. THE COATING SHALL BE A ONE COAT SYSTEM (NO PRIMER) CAPABLE OF BEING SPRAY APPLIED TO A DRY FILM THICKNESS OF 15 MILS (375 MICRONS) WITHOUT RUNS OR SAGS (MULTIPLE COAT APPLICATION ACCEPTABLE FOR BRUSH/ROLLER USAGE AND PRIMER USAGE ACCEPTABLE FOR SPECIALTY SUBSTRATES SUCH AS GALVANIZED METAL).

C. THE COATING SHALL EMIT LESS THAN 300 G/L (2.5 POUNDS PER GALLON) OF VOLATILE ORGANIZE COMPOUNDS (EPA METHOD 24).

D. THE COATING SHALL MEET THE FOLLOWING PERFORMANCE REQUIREMENTS:
1. CLEANABILITY LEVEL 1 (GRAFFITI COMPLETELY REMOVED WITH COLD WATER POWER WASH) AS PER ASTM D7089 WITH LOW PRESSURE (1200 PSI) COLD WATER WASH AFTER 2000 HOURS ACCELERATED UV-CONDENSATION EXPOSURE IN ACCORDANCE WITH ASTM D4587.
2. GRAFFITI RESISTANCE LESS THAN 7.5 AS PER ASTM D6578 AFTER 2000 HOURS ACCELERATED UV-CONDENSATION EXPOSURE IN ACCORDANCE WITH ASTM 4578.
3. NO SIGNS OF GRAFFITI OR GRAFFITI STAINING AND MUST BE INTACT AND EXHIBIT NO SIGNS OF STREAKING, CRACKING, PINHOLING, DISCOLORING, OR OTHER VISIBLE COATING DEGRADATION UPON CASUAL OBSERVATION WHEN TESTED IN ACCORDANCE WITH TXDOT TEX 890-B, TYPE III METHOD.
4. BREATHABILITY OF 10 PERMS (+/- 3) PER ASTM D1653 USING "WET CUP METHOD".
5. ELONGATION AT BREAK GREATER THAN 100% AS PER ASTM D412 (USING DIE "D").
6. ADHESION RATING OF "8 - DIFFICULT TO REMOVE" AS PER ASTM D6677 (ADHESION BY KNIFE).

DRILLED SHAFTS:

THE MAXIMUM UNFACTORED LOAD TO BE SUPPORTED BY EACH DRILLED SHAFT IS 249 KIPS AT THE ABUTMENTS AND 937 KIPS AT THE PIERS. THIS LOAD IS RESISTED BY SIDE RESISTANCE WITHIN A PORTION OF THE BEDROCK SOCKET AND ALSO BY TIP RESISTANCE. ALLOWABLE SIDE AND TIP RESISTANCES WERE DETERMINED USING A SAFETY FACTOR OF 2.5. THE ALLOWABLE SIDE RESISTANCE IS 200 KIPS AT THE ABUTMENTS, ASSUMED TO ACT ALONG THE BOTTOM 4.5 FEET OF THE BEDROCK SOCKET. THE ALLOWABLE RESISTANCE PROVIDED BY THE DRILLED SHAFT TIP IS 379 KIPS AT THE ABUTMENTS. EACH ABUTMENT DRILLED SHAFT IS SOCKETED 6.5 FEET INTO ROCK TO PROVIDE LATERAL STABILITY. THE ALLOWABLE SIDE RESISTANCE IS 684 KIPS AT THE PIERS, ASSUMED TO ACT ALONG THE BOTTOM 16 FEET OF THE BEDROCK SOCKET. THE ALLOWABLE RESISTANCE PROVIDED BY THE DRILLED SHAFT TIP IS 392 KIPS AT THE PIERS.

A. THE SHAFTS SHALL BE PLUMB. ANY DEVIATION FROM THE VERTICAL AT THE BOTTOM OF THE SHAFT SHALL NOT EXCEED 1 PERCENT OF THE SHAFT LENGTH OR ¼ INCH FOR EVERY 10 FEET OF LENGTH, WHICHEVER IS THE SMALLER VALUE. ANY DEVIATION FROM THE VERTICAL GREATER THEN HEREIN SPECIFIED SHALL BE CORRECTED BY THE CONTRACTOR AT NO ADDITIONAL COST TO THE COMPANY BEFORE ANY REINFORCEMENT STEEL AND CONCRETE ARE PLACED.

B. NO SHAFT EXCAVATION SHALL BE MADE IN EMBANKMENT MATERIAL IN AN UNCASED CONDITION.

C. PRIOR TO COMMENCING WORK, THE DBT SHALL PREPARE AND SUBMIT TO THE DEPARTMENT FOR REVIEW AND APPROVAL, DRILLED SHAFT INSTALLATION PLAN IN ACCORDANCE WITH THE C&MS 524.03.

ITEM 607 - VANDAL PROTECTION FENCE, AS PER PLAN

THE CONTRACTOR SHALL FURNISH ALL NECESSARY LABOR, MATERIALS AND EQUIPMENT TO FABRICATE, GALVANIZE, CLEAN, APPLY A TWO-COAT SHOP PAINT SYSTEM (EPOXY/URETHANE) AND INSTALL THE RAILING. ALL FENCE AND RAILING MATERIALS SHALL BE GALVANIZED AND PAINTED PER THIS NOTE.

A. FABRICATION OF THE RAILING SHALL BE IN ACCORDANCE WITH C&MS 513, UF LEVEL. COATING OF THE RAILING SHALL BE IN ACCORDANCE WITH C&MS 514, EXCEPT AS NOTED BELOW.

B. THE ARCHITECTURAL FENCING SHALL SATISFY THE MINIMUM DESIGN REQUIREMENTS FOR POSTS AND ANCHORAGES AS SPECIFIED IN STANDARD BRIDGE DRAWING VPF-1-90, "VANDAL PROTECTION FENCE".

C. THE FENCING SHALL BE CONSTRUCTED USING WELDED WIRE FABRIC WITH 10.5 GAGE CORE WIRE, GALVANIZED AFTER WELDING.

ITEM 607 - VANDAL PROTECTION FENCE, AS PER PLAN, CONT'D

D. STEEL PLATES AND SHAPES SHALL BE ASTM A709 GRADE 36 OR 50. ALL OTHER MATERIALS SHALL BE IN ACCORDANCE WITH C&MS 707.10 OR 711.09.

E. THE GALVANIZED COATING SYSTEM MAY BE APPLIED BY A GALVANIZER NOT PRE-QUALIFIED AS A FABRICATION SHOP UNDER SUPPLEMENT 1078, BUT THE PRE-QUALIFIED FABRICATOR OF THE STRUCTURAL STEEL SHALL BE RESPONSIBLE FOR THE QUALITY OF THE APPLIED GALVANIZED COATING SYSTEM AND ANY REPAIRS, RE-FABRICATION AND ADDITIONAL ASSEMBLIES REQUIRED TO ASSURE THE FABRICATED STEEL MEETS THE PLAN REQUIREMENTS.

F. THE TWO SHOP COATS SHALL BE APPLIED IN A STRUCTURAL STEEL FABRICATION SHOP HAVING PERMANENT BUILDINGS PER 513.04 AND PREQUALIFIED AT THE UF LEVEL. THE PAINT QUALITY CONTROL SPECIALIST (QCS) SHALL BE QUALIFIED AS SPECIFIED IN 514.04.

G. PRIOR TO GALVANIZING, ALL CORNERS OF THERMALLY CUT OR SHEARED EDGES SHALL HAVE A 1/16-INCH RADIUS OR EQUIVALENT FLAT SURFACE AT A SUITABLE ANGLE.

H. GALVANIZE THE FABRICATED RAILING AND HARDWARE ACCORDING TO C&MS 711.02, EXCEPT THAT FABRICATED RAILING ELEMENTS SHALL NOT BE POST TREATED WITH WATER QUENCHING OR CHROMATE CONVERSION COATED.

I. AFTER GALVANIZATION, REMOVE ZINC HIGH SPOTS SUCH AS METAL DRIP LINE AND OTHERS THAT WOULD DETRACT FROM THE PAINT APPEARANCE BY SSPC SP2 OR SP3. TAKE CARE THAT THE BASE GALVANIZED COATING IS NOT REMOVED. CHECK REPAIRED AREAS FOR REQUIRED COATING THICKNESS.

J. REPAIR GALVANIZED COATINGS DAMAGED IN THE SHOP ACCORDING TO ASTM A780 METHOD A1.

K. AFTER REMOVING HIGH SPOTS, CLEAN THE GALVANIZED COATING ACCORDING TO SSPC SP-1. THE CLEANING SOLUTION SHALL BE AN ALKALINE SOLUTION WITH A PH RANGING FROM A MINIMUM OF 11 TO A MAXIMUM OF 12. THIS SOLUTION CAN BE APPLIED BY IMMERSION, SPRAY OR SOFT NYLON BRUSH. FOLLOW CLEANING WITH A HOT WATER OR HOT PRESSURE WASHER RINSE. SEPARATE INDIVIDUAL PIECES AND POSITION TO FACILITATE DRAINAGE AND DRYING. THE PIECES SHALL BE COMPLETELY DRY BEFORE PROCEEDING.

L. AFTER CLEANING, ABRASIVE BLAST THE PIECES ACCORDING TO SSPC-SP7 BRUSH-OFF BLAST CLEANING. THE BLASTING OPERATION SHALL ROUGHEN THE GALVANIZED SURFACE TO AN ANGULAR SURFACE PROFILE OF 0.75 TO 1.00 MILS. SELECT THE BLASTING EQUIPMENT, TECHNIQUE AND ABRASIVE MATERIAL TO PROVIDE FOR THE SPECIFIED SURFACE PROFILE WITHOUT REMOVAL OF EXCESSIVE ZINC LAYERS. THE FINAL ZINC MILLAGE SHALL NOT BE LESS THAN 4.0 MILS. REMOVE ALL ABRASIVE RESIDUE WITH CLEAN COMPRESSED AIR OR OTHER METHODS ACCEPTABLE TO THE DEPARTMENT.

M. AFTER OBTAINING SURFACE PROFILE, SHOP APPLY A TWO COAT PAINT SYSTEM CONSISTING OF EPOXY INTERMEDIATE COAT AND A URETHANE FINISH COAT MEETING THE REQUIREMENTS OF C&MS 708.02. THE FINISH COAT SHALL MATCH FEDERAL COLOR STANDARD FS 595C-17038 BLACK. APPLY THE EPOXY COATING WITHIN 24 HOURS OF THE BRUSH-OFF BLASTING.

N. PRIOR TO FABRICATION OF THE RAILING SYSTEM, FABRICATE A SAMPLE RAILING PANEL OF A LENGTH AGREEABLE TO THE PROJECT ENGINEER WHICH INCLUDES TWO POSTS, ALL HARDWARE, INCIDENTALS AND COATINGS. THE PROJECT ENGINEER WILL USE THIS SAMPLE PANEL TO JUDGE ACCEPTANCE OF THE FABRICATION, COATINGS AND QUALITY CONTROL PROGRAM. AFTER THE REVIEW OF THIS SAMPLE, THE DEPARTMENT AND THE CONTRACTOR MAY AGREE UPON ANY FABRICATION, COATING, QUALITY CONTROL OR INSTALLATION CHANGES AS A MODIFICATION TO THESE NOTES. THE FABRICATION CAN PROCEED ANY TIME AFTER THE ACCEPTANCE OF THIS SAMPLE PANEL. THE SAMPLE PANEL MAY BE INCORPORATED INTO THE FINISHED WORK AT THE DISCRETION OF THE ENGINEER.

O. REPAIR DAMAGE TO THE PAINT SYSTEM CAUSED DURING STORAGE, TRANSPORTATION, ERECTION, ACCORDING TO C&MS 514.22. EXERCISE EXTREME CARE WHILE HANDLING THE STEEL DURING ERECTION, AND DURING SUBSEQUENT CONSTRUCTION OF THE RAILING AND FENCE. INSULATE THE STEEL FROM THE BINDING CHAINS BY SOFTENERS AND PAD ALL HOOKS AND SLINGS THAT ARE USED TO HOIST/ERECT THE MEMBERS.

P. ALL FENCE ANCHORS SHALL BE CAST INTO THE PARAPET. A WASHER AND NUT SHALL BE TACK WELDED TO THE BOTTOM OF THE THREADED RODD TO AVOID THE ANCHORS PULLING LOOSE WHEN THE TEMPLATES FOR THE BASEPLATES ARE STRIPPED. FENCE ANCHORAGE SHALL BE STAINLESS STEEL PER C&MS 730.10.

SECTION / DETAIL / VIEW CALLOUTS

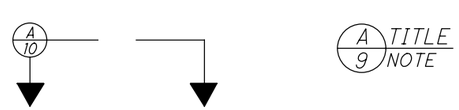

(SEE SECTION A ON SHEET 10) (SECTION A CUT FROM SHEET 9)

ABBREVIATIONS

& = AND
@ = AT
ABUT. = ABUTMENT
℄ = BASELINE
BOT. = BOTTOM
BRG = BEARING
BRGS. = BEARINGS
BTWN. = BETWEEN
C.J. = CONSTRUCTION JOINT
C/C = CENTER-TO-CENTER
℄ = CENTERLINE
CLR = CLEAR
COMM. = COMMUNICATIONS
CVN = CHARPY V-NOTCH
DIA. = DIAMETER
DIM. = DIMENSION
DR. = DRIVE
E.F. = EACH FACE
EB = EAST BOUND
ELEV. = ELEVATION
EX. = EXISTING
F = FAHRENHEIT
F.A. = FORWARD ABUTMENT
F.F. = FAR FACE
F/F = FACE-TO-FACE
FCM = FRACTURE CRITICAL MEMBER
GA. = GAUGE
GALV. = GALVANIZED
HR = HOUR
I.D. = INSIDE DIAMETER
INV. = INVERT ELEVATION
KV = KILOVOLT
LBS = POUNDS
LL = LIVE LOAD
LONG. = LONGITUDINAL
LT. = LEFT
MAX. = MAXIMUM
MIN. = MINIMUM
MISC. = MISCELLANEOUS
MPH = MILES PER HOUR
N.F. = NEAR FACE
NEORSD = NORTH EAST OHIO REGIONAL SEWER DISTRICT
NS = NORFOLK SOUTHERN
O/O = OUT-TO-OUT
O.D. = OUTSIDE DIAMETER
ODOT = OHIO DEPARTMENT OF TRANSPORTATION
PCPP = PERFORATED CORRUGATED PLASTIC PIPE
PEJF = PRE-FORMED EXPANSION JOINT FILLER
PGL = PROFILE GRADE LINE
ℙ = PLATE
PROP. = PROPOSED
PSI = POUNDS PER SQUARE INCH
R.A. = REAR ABUTMENT
R/W = RIGHT OF WAY
RR = RAILROAD
RT. = RIGHT
S.O. = SERIES OF
SPA. = SPACED, SPACES, SPACING
STA. = STATION
T/T = TOE-TO-TOE
TYP. = TYPICAL
U.N.O. = UNLESS NOTED OTHERWISE
WB = WEST BOUND

NO.	DATE	DESCRIPTION
0	2/25/19	RFC

ISSUE RECORD

DESIGN AGENCY
Michael Baker INTERNATIONAL
1111 SUPERIOR AVE E. SUITE 2300, CLEVELAND, OH 44114

DESIGNED	DRAWN	REVIEWED	DATE
LJH	SSW	JWB	11/5/18
CHECKED	REVISED	STRUCTURE FILE NUMBER	
LPC		18101519	

RECORD PLANS

GENERAL NOTES (4 OF 5)
CUY-010-2039
NORFOLK SOUTHERN RAILROAD OVER OH-10

RECORD PLANS

CUY-IR490/SR010-2.09/19.28
PID No. 96833

RECORD PLANS

RFC SUBMITTAL
BU-22 - NORFOLK SOUTHERN BRIDGE OVER OH-10
...\Sheets\010_2039C_SN604.dgn 3/18/2019 1:36:23 PM ccummings

SUGGESTED CONSTRUCTION SEQUENCE

1. CONSTRUCT PHASE 1 TEMPORARY ALIGNMENT FOR MAIN 1 AND MAIN 2 TRACKS.
2. CUT AND THROW EXISTING TRACKS TO PHASE 1 TEMPORARY ALIGNMENTS.
3. INSTALL TEMPORARY SHORING ADJACENT TO PHASE 1 TEMPORARY ALIGNMENT FOR MAIN 1.
4. EXCAVATE DOWN TO BOTTOM OF ABUTMENT CAP ELEVATIONS AND BOTTOM OF PIER CAP ELEVATION.
5. INSTALL DRILLED SHAFTS DS06- DS16, DS19-DS22, DS29- DS38.
6. CAST ABUTMENT SEATS, BACKWALLS AND PIER CAP UP TO PHASE 1 LIMIT.
7. SET BEARINGS AND INSTALL STEEL GIRDERS G1-G11 AND G19- G29.
8. CAST DECK TO PHASE 1 LIMITS.
9. INSTALL DECK WATERPROOFING.
10. INSTALL TEMPORARY BALLAST RETAINER.
11. INSTALL BALLAST ON BRIDGE.
12. CONSTRUCT PHASE 2 TEMPORARY ALIGNMENT FOR MAIN 1 AND MAIN 2 TRACKS.
13. CUT AND THROW TRACKS TO PHASE 2 TEMPORARY ALIGNMENTS.
14. EXCAVATE DOWN TO BOTTOM OF ABUTMENT CAP ELEVATIONS AND BOTTOM OF PIER CAP FOR REMAINDER OF PHASE 2 LIMITS.
15. INSTALL DRILLED SHAFTS DS01-DS05, DS17-DS18, DS23-28.
16. CAST ABUTMENT SEATS, BACKWALLS, AND PIER CAP TO THE FULL EXTENT.
17. SET BEARINGS AND INSTALL GIRDERS G12-G18, AND G30-G36. CONNECT G12 TO G11 AND G30 TO G29 USING OVERSIZED HOLES IN THE DIAPHRAGM.
18. CAST REMAINDER OF THE DECK TO THE PHASE 2 LIMITS.
19. INSTALL DECK WATERPROOFING TO THE PHASE 2 LIMITS.
20. INSTALL BALLAST ON BRIDGE.
21. REMOVE TEMPORARY BALLAST RETAINER.
22. SHIFT TEMPORARY MAIN 1 AND MAIN 2 TO FINAL LOCATION.
23. EXCAVATE OUT BELOW THE BRIDGE.
24. INSTALL ABUTMENT FACING AND PIER FACING.

SPECIFICATION	ITEM	DESCRIPTION
NS/AREMA	-	EXCAVATION
ODOT	503	UNCLASSIFIED EXCAVATION, AS PER PLAN
NS/AREMA	-	EPOXY COATED REINFORCING STEEL
NS/AREMA	-	CAST-IN-PLACE CONCRETE
NS/AREMA	-	CONCRETE, BRIDGE DECK (PARAPET), AS PER PLAN
ODOT	512	SEALING OF CONCRETE SURFACES, AS PER PLAN: PERMANENT GRAFFITI PROTECTION
ODOT	512	SEALING OF CONCRETE SURFACES (EPOXY-URETHANE)
NS/AREMA	-	WATERPROOFING, MISC.: WATERPROOFING AND DAMPPROOFING
NS/AREMA	-	WATERPROOFING, MISC.: COLD-SPRAY APPLIED WATERPROOFING
ODOT	512	SPECIAL - SEALING: ODOT 705.04 JOINT SEALING MATERIAL
NS/AREMA	-	STRUCTURAL STEEL MEMBER
ODOT	513	WELDED STUD SHEAR CONNECTORS
ODOT	513	STRUCTURAL STEEL, MISC.: UTILITY SUPPORTS AND INSTALLATION
ODOT	514	FIELD PAINTING STRUCTURAL STEEL, SHOP, INTERMEDIATE AND FINISH COAT
ODOT	516	STRUCTURAL STEEL EXPANSION JOINT, AS PER PLAN
NS/AREMA	-	ELASTOMERIC BRIDGE BEARINGS
NS/AREMA	-	POROUS BACKFILL WITH GEOTEXTILE FABRIC
NS/AREMA	-	PIPE UNDERDRAIN
ODOT	518	STRUCTURE DRAINAGE, MISC.: BRIDGE DECK DRAINAGE SYSTEM
NS/AREMA	-	DRILLED SHAFTS
NS/AREMA	-	MONITORING MOVEMENT OF TRACK AND TEMPORARY SHORING
ODOT	607	VANDAL PROTECTION FENCE, AS PER PLAN
ODOT	607	8' TALL VANDAL PROTECTION FENCE VPF-1-90, AS PER PLAN
ODOT	608	6" CONCRETE WALK

NO.	DATE	DESCRIPTION
0	2/25/19	RFC

ISSUE RECORD

DESIGN AGENCY
Michael Baker INTERNATIONAL
1111 SUPERIOR AVE E., SUITE 2300, CLEVELAND, OH 44114

DESIGNED	DRAWN	REVIEWED	DATE
LJH	SSW	JWB	11/5/18
CHECKED	REVISED	STRUCTURE FILE NUMBER	
LPC		18101519	

RECORD PLANS

GENERAL NOTES (5 OF 5)
CUY-010-2039
NORFOLK SOUTHERN RAILROAD OVER OH-10

RECORD PLANS

CUY-IR490/SR010-2.09/19.28
PID No. 96833

RECORD PLANS

RFC SUBMITTAL
BU-22 - NORFOLK SOUTHERN BRIDGE OVER OH-10
...\Sheets\010_2039C_SN605.dgn 3/18/2019 1:36:38 PM ccummings

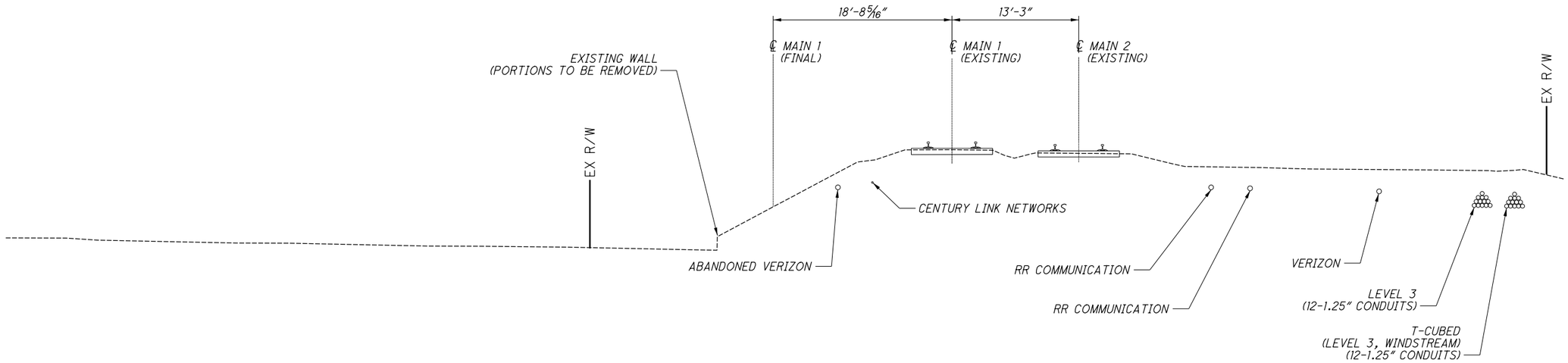

EXISTING SECTION

LOOKING UPSTATION

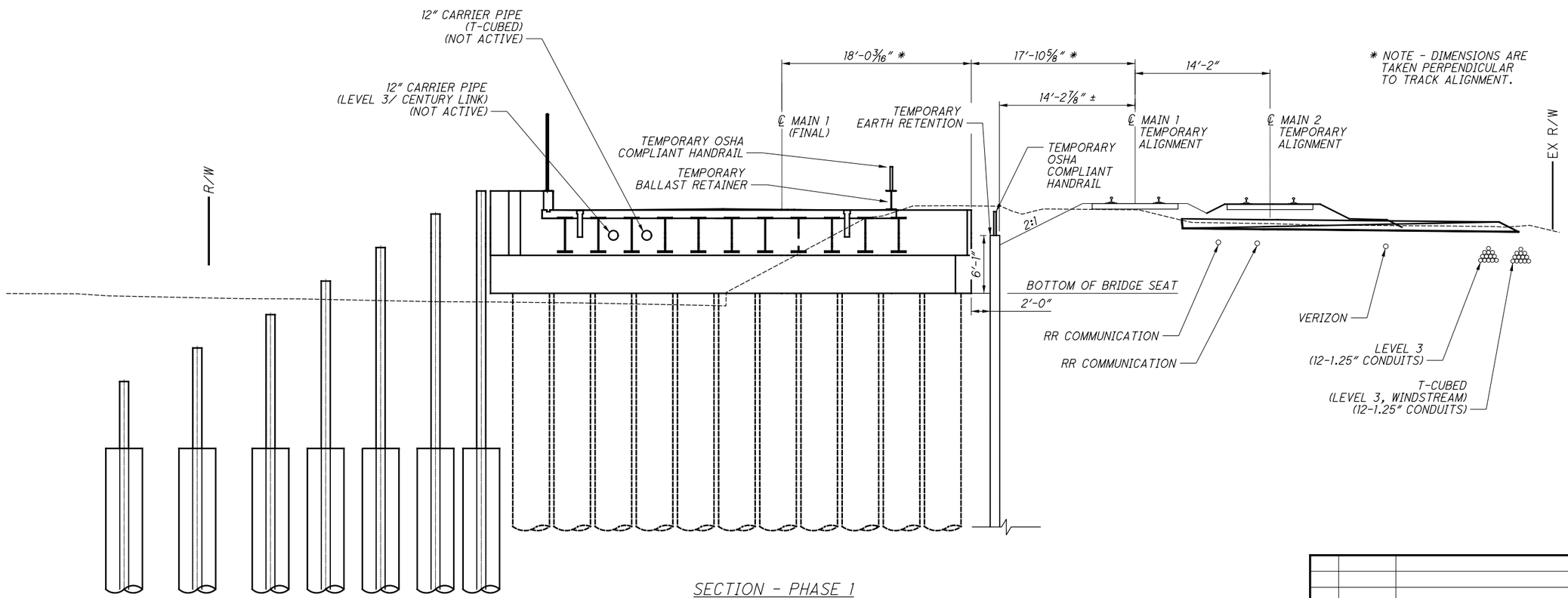

SECTION - PHASE 1

LOOKING UPSTATION

NO.	DATE	DESCRIPTION
0	2/25/19	RFC

ISSUE RECORD

DESIGN AGENCY
Michael Baker INTERNATIONAL
1111 SUPERIOR AVE E., SUITE 2300, CLEVELAND, OH 44114

DESIGNED	DRAWN	REVIEWED	DATE
CDC	CDC	JWB	11/5/2018
CHECKED	REVISED	STRUCTURE FILE NUMBER	
LJH	—	1801519	

RECORD PLANS

PHASING DETAILS (1 OF 2)

CUY-010-2039

NORFOLK SOUTHERN RAILROAD OVER OH-10

RECORD PLANS

CUY-IR490/SR010-2.09/19.28

PID No. 96833

RECORD PLANS

RFC SUBMITTAL
BU-22 - NORFOLK SOUTHERN BRIDGE OVER OH-10
...\Sheets\010_2039C_SC601.dgn 3/18/2019 1:36:55 PM ccummings

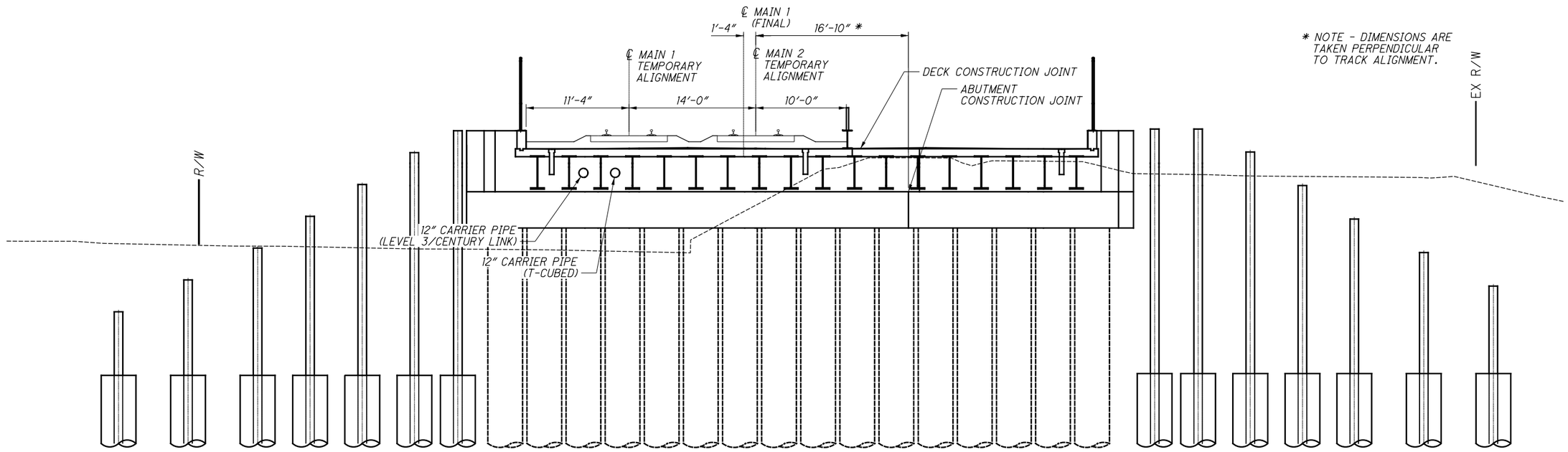

SECTION - PHASE 2

LOOKING UPSTATION

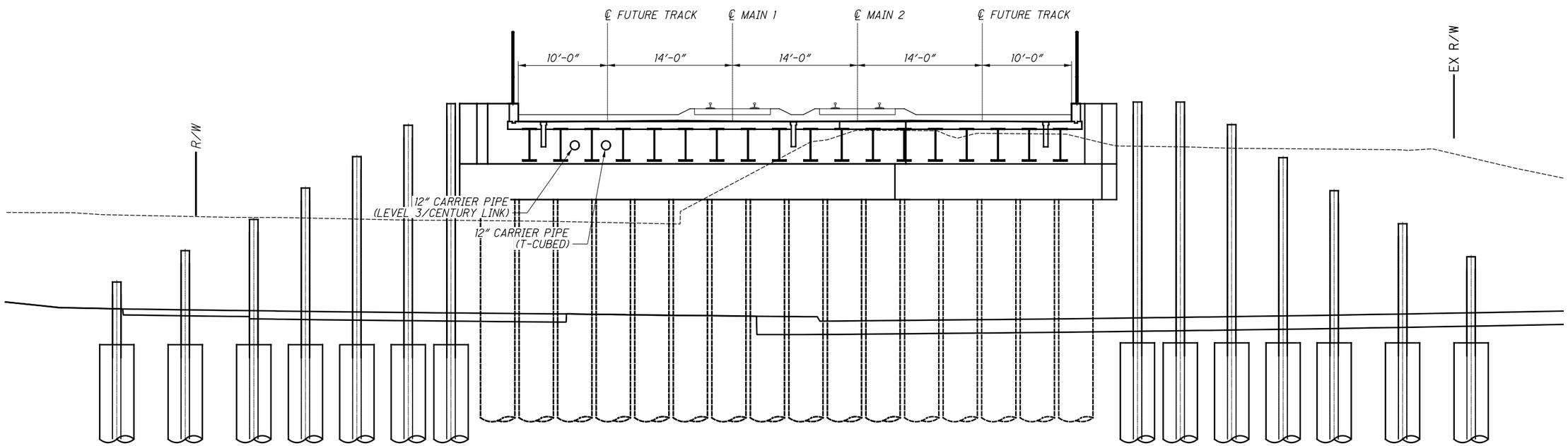

SECTION - PHASE 3 (FINAL)

LOOKING UPSTATION

NO.	DATE	DESCRIPTION
0	2/25/19	RFC

ISSUE RECORD

DESIGN AGENCY
Michael Baker INTERNATIONAL
1111 SUPERIOR AVE E., SUITE 2300, CLEVELAND, OH 44114

DESIGNED	DRAWN	REVIEWED	DATE
CDC	CDC	JWB	11/5/2018
CHECKED	REVISED	STRUCTURE FILE NUMBER	
LJH	—	1801519	

RECORD PLANS

PHASING DETAILS (2 OF 2)

CUY-010-2039

NORFOLK SOUTHERN RAILROAD OVER OH-10

RECORD PLANS

CUY-IR490/SR010-2.09/19.28

PID No. 96833

RECORD PLANS

RFC SUBMITTAL
BU-22 - NORFOLK SOUTHERN BRIDGE OVER OH-10
...\Sheets\010_2039C_SC602.dgn 3/18/2019 1:37:15 PM ccummings

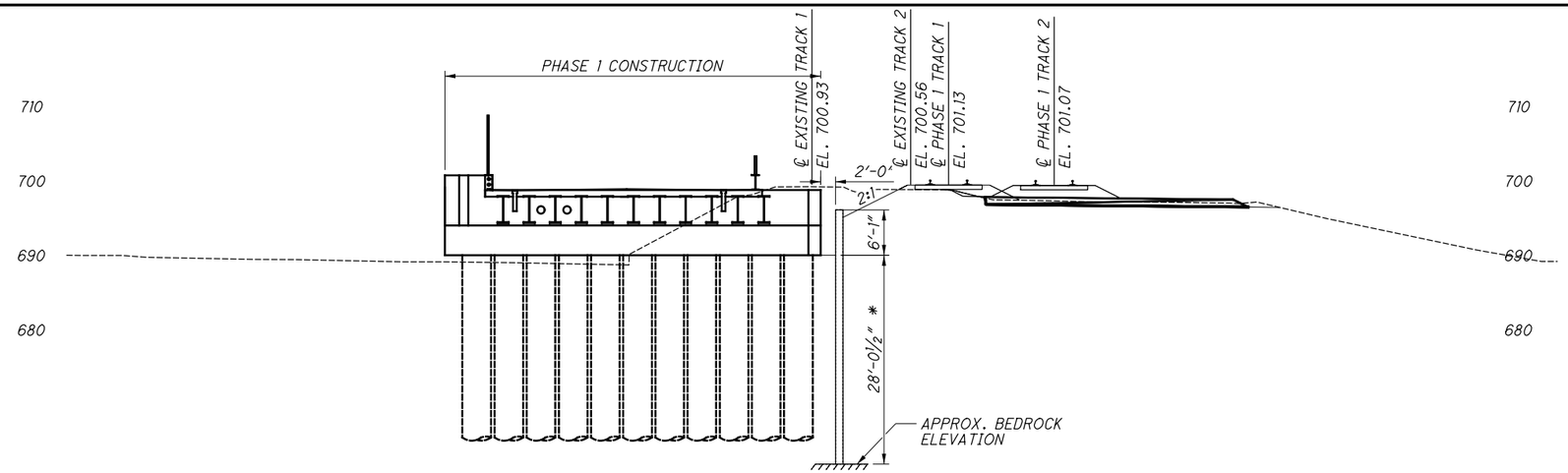

FORWARD ABUTMENT (NORTH)

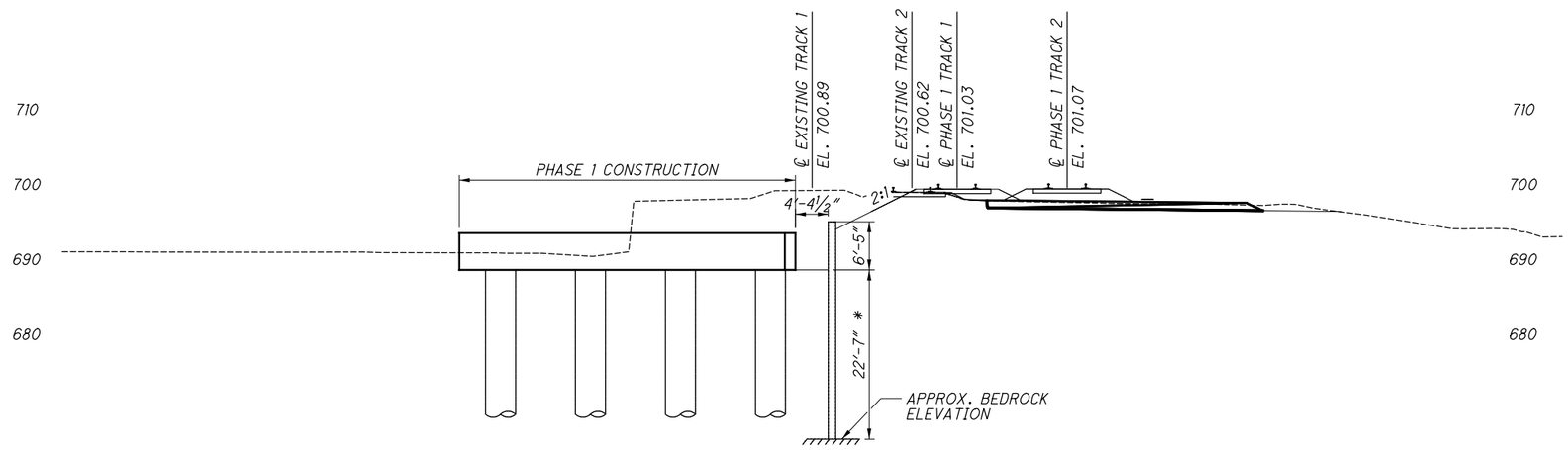

PIER

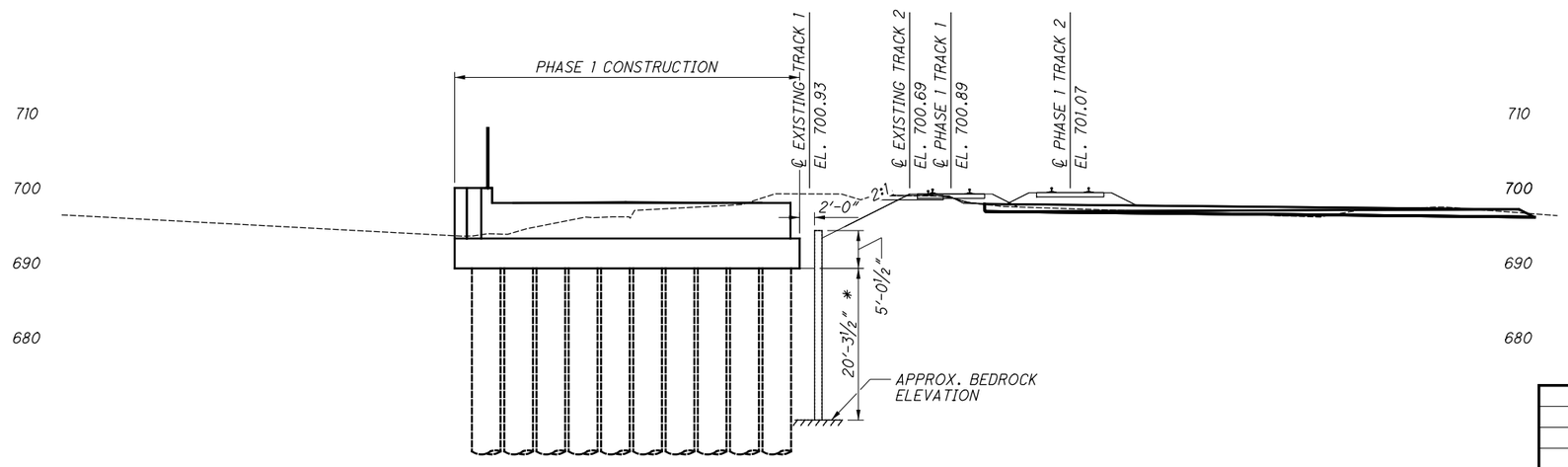

REAR ABUTMENT (SOUTH)

* NOTE:

SHORING TO BE DESIGNED BY CONTRACTOR.

NO.	DATE	DESCRIPTION
0	2/25/19	RFC

ISSUE RECORD

DESIGN AGENCY
Michael Baker INTERNATIONAL
1111 SUPERIOR AVE E., SUITE 2300, CLEVELAND, OH 44114

DESIGNED	DRAWN	REVIEWED	DATE
LJH	LJH	JWB	11/5/18
CHECKED	REVISED	STRUCTURE FILE NUMBER	
CDC		1801519	

RECORD PLANS

TEMPORARY SHORING CROSS SECTIONS

CUY-010-2039
NORFOLK SOUTHERN RAILROAD OVER OH-10

RECORD PLANS

CUY-IR490/SR010-2.09/19.28
PID No. 96833

RECORD PLANS

RFC SUBMITTAL
BU-22 - NORFOLK SOUTHERN BRIDGE OVER OH-10
...\Sheets\010_2039C_SC603.dgn 3/18/2019 1:37:28 PM ccummings

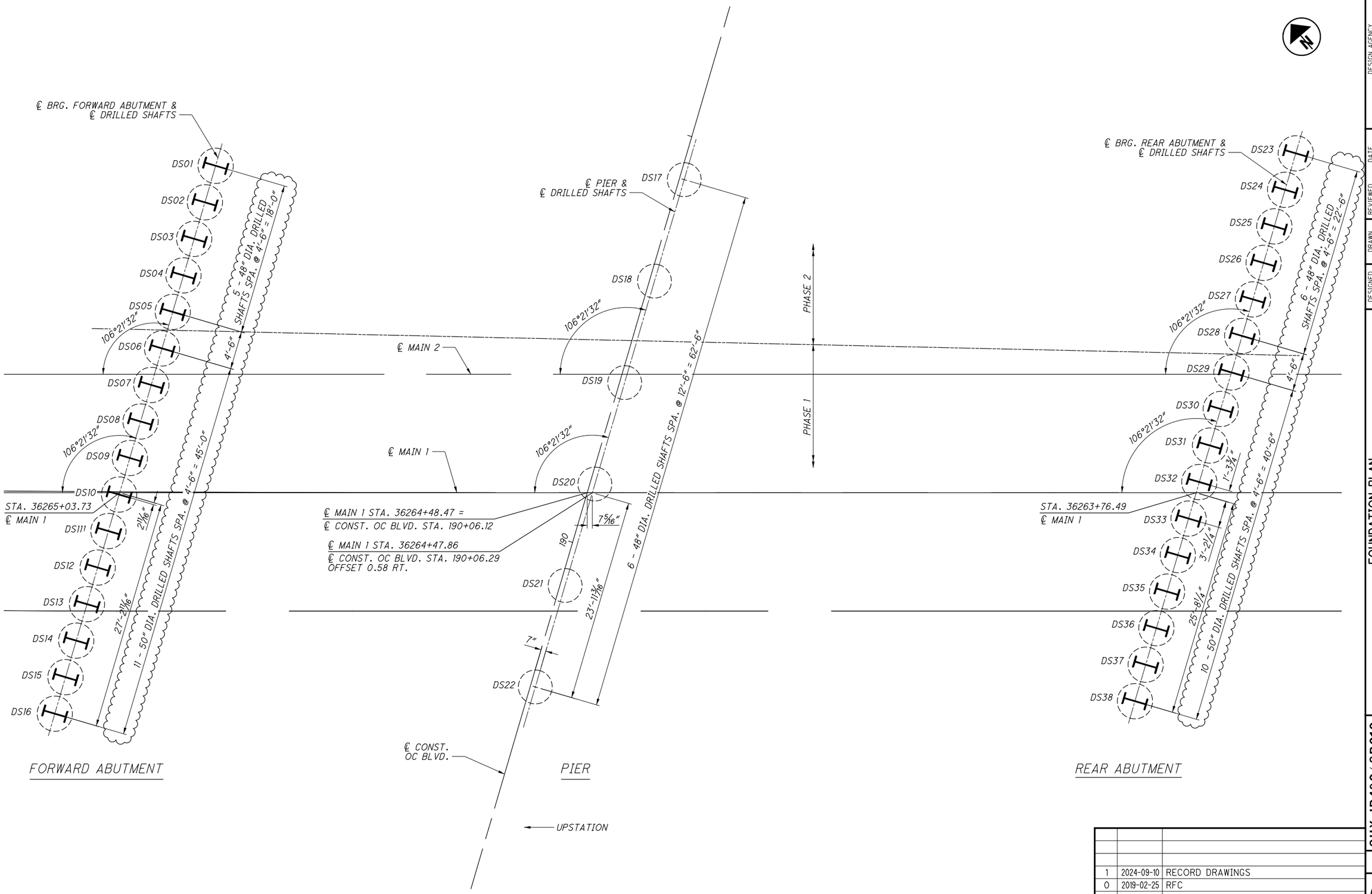

NO.	DATE	DESCRIPTION
1	2024-09-10	RECORD DRAWINGS
0	2019-02-25	RFC

ISSUE RECORD

DESIGN AGENCY
Michael Baker INTERNATIONAL
1111 SUPERIOR AVE E., SUITE 2300, CLEVELAND, OH 44114

DESIGNED	DRAWN	REVIEWED	DATE
GMC	GMC	JWB	11/5/2018
CHECKED	REVISED	STRUCTURE FILE NUMBER	
CDC	—	1801519	

RECORD PLANS

FOUNDATION PLAN

CUY-010-2039
NORFOLK SOUTHERN RAILROAD OVER OH-10

RECORD PLANS

CUY-IR490/SR010-2.09/19.28
PID No. 96833

RECORD PLANS

BU-22 - NORFOLK SOUTHERN BRIDGE OVER OH-10
...\Sheets\010_2039C_S0601.dgn 12/10/2024 3:18:02 PM Rohit.Bk

DRILLED SHAFT SCHEDULE									
DESIGNATION	DIAMETER	TOP ELEV.	APPROX. ROCK ELEV.	ROCK SOCKET DIA.	ROCK SOCKET LENGTH	TOTAL LENGTH	D.S. BAR MARK	NO. OF D.S. LONG. BARS	UNIT
DS01	50″	690.86	664.1	48″	6′-6″	33.6	DS1102	24	F.A.
DS02	50″	690.86	663.9	48″	6′-6″	33.8	DS1102	24	
DS03	50″	690.86	663.7	48″	6′-6″	33.6	DS1102	24	
DS04	50″	690.86	663.5	48″	6′-6″	33.6	DS1102	24	
DS05	50″	690.86	663.3	48″	6′-6″	34.3	DS1103	24	
DS06	50″	690.86	663.1	50″	6′-6″	34.3	DS1103	24	
DS07	50″	690.86	662.9	50″	6′-6″	34.5	DS1103	24	
DS08	50″	690.86	662.7	50″	6′-6″	34.7	DS1103	24	
DS09	50″	690.86	662.4	50″	6′-6″	34.9	DS1104	24	
DS10	50″	690.86	662.2	50″	6′-6″	35.1	DS1104	24	
DS11	50″	690.86	662.0	50″	6′-6″	35.3	DS1104	24	
DS12	50″	690.86	661.8	50″	6′-6″	35.5	DS1104	24	
DS13	50″	690.86	661.6	50″	6′-6″	35.7	DS1105	24	
DS14	50″	690.86	661.4	50″	6′-6″	35.9	DS1105	24	
DS15	50″	690.86	661.2	50″	6′-6″	36.2	DS1105	24	
DS16	50″	690.86	661.0	50″	6′-6″	36.4	DS1105	24	
DS17	48″	689.62	668.0	48″	18′-0″	40.1	DS1107	12	PIER
DS18	48″	689.62	667.4	48″	18′-0″	40.0	DS1107	12	
DS19	48″	689.62	666.8	48″	18′-0″	40.9	DS1108	12	
DS20	48″	689.62	666.1	48″	18′-0″	41.5	DS1108	12	
DS21	48″	689.62	665.5	48″	18′-0″	42.1	DS1109	12	
DS22	48″	689.62	664.9	48″	18′-0″	42.7	DS1109	12	
DS23	50″	690.49	671.1	48″	6′-6″	26.4	DS1111	24	R.A.
DS24	50″	690.49	671.0	48″	6′-6″	26.2	DS1111	24	
DS25	50″	690.49	670.8	48″	6′-6″	26.1	DS1111	24	
DS26	50″	690.49	670.7	48″	6′-6″	26.3	DS1111	24	
DS27	50″	690.49	670.6	48″	6′-6″	26.3	DS1111	24	
DS28	50″	690.49	670.5	48″	6′-6″	26.4	DS1111	24	
DS29	50″	690.49	670.3	50″	6′-6″	26.7	DS1111	24	
DS30	50″	690.49	670.2	50″	6′-6″	26.8	DS1111	24	
DS31	50″	690.49	670.1	50″	6′-6″	26.9	DS1112	24	
DS32	50″	690.49	670.0	50″	6′-6″	27.0	DS1112	24	
DS33	50″	690.49	669.8	50″	6′-6″	27.2	DS1112	24	
DS34	50″	690.49	669.7	50″	6′-6″	27.3	DS1112	24	
DS35	50″	690.49	669.6	50″	6′-6″	27.4	DS1112	24	
DS36	50″	690.49	669.5	50″	6′-6″	27.5	DS1112	24	
DS37	50″	690.49	669.3	50″	6′-6″	27.7	DS1112	24	
DS38	50″	690.49	669.2	50″	6′-6″	27.8	DS1112	24	

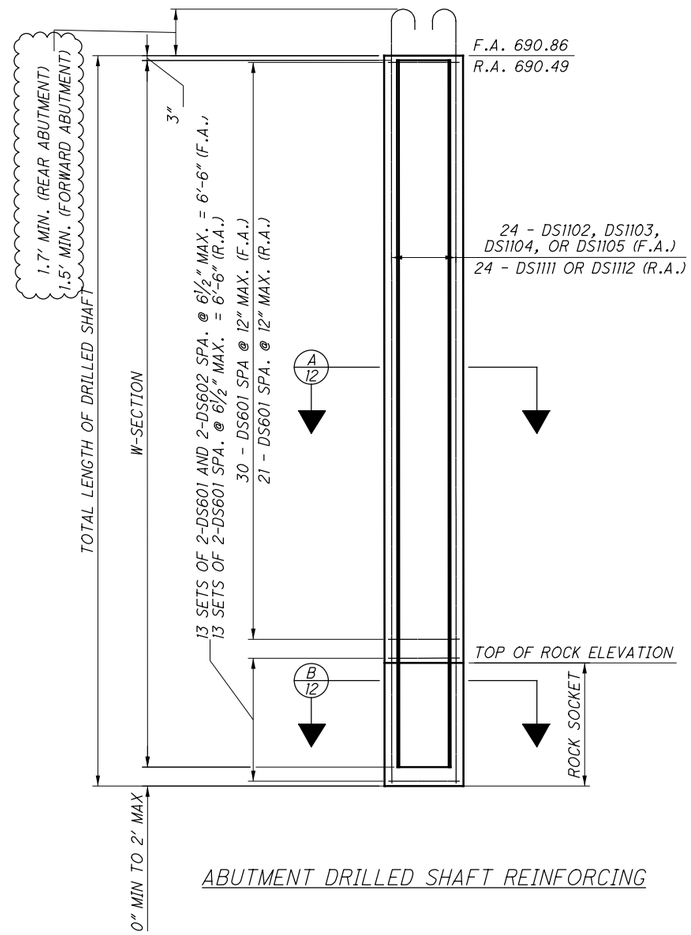

ABUTMENT DRILLED SHAFT REINFORCING

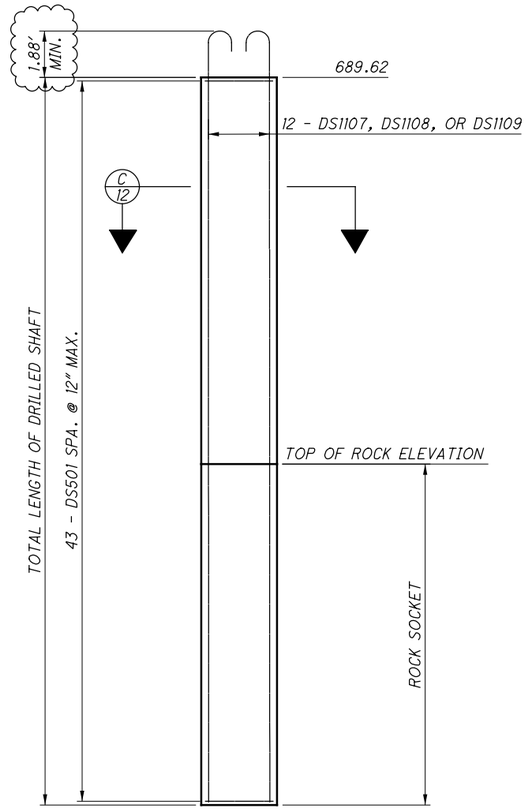

PIER DRILLED SHAFT REINFORCING

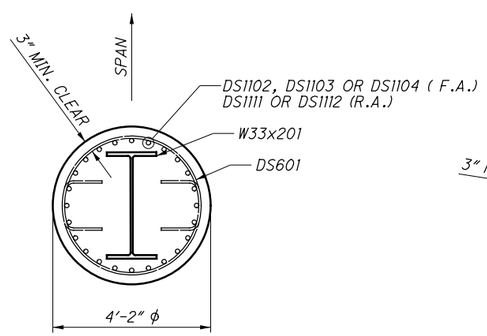

A 12 SECTION

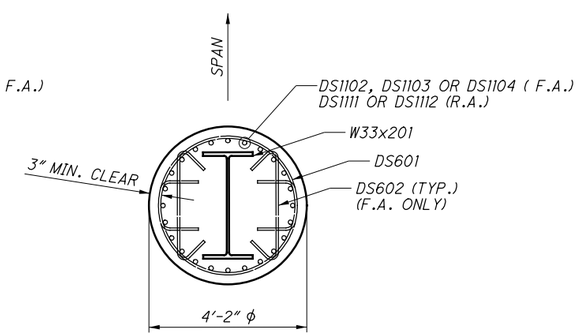

B 12 SECTION

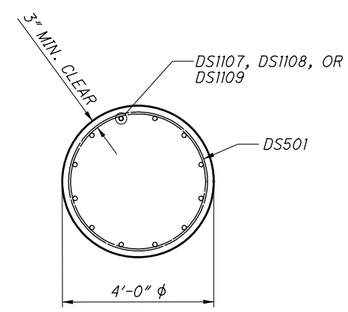

C 12 SECTION

NOTES:

1. #11 LAP = 8′-5″ MIN. U.N.O.

NO.	DATE	DESCRIPTION
1	2024-09-10	RECORD DRAWINGS
0	2019-02-25	RFC

ISSUE RECORD

DESIGN AGENCY
Michael Baker INTERNATIONAL
1111 SUPERIOR AVE E., SUITE 2300, CLEVELAND, OH 44114

DESIGNED	DRAWN	REVIEWED	DATE
SSW	SSW	JWB	11/5/18
CHECKED	REVISED	STRUCTURE FILE NUMBER	
BCM		1801519	

RECORD PLANS

DRILLED SHAFT DETAILS
CUY-010-2039
NORFOLK SOUTHERN RAILROAD OVER OH-10

RECORD PLANS

CUY-IR490/SR010-2.09/19.28
PID No. 96833

RECORD PLANS

BU-22 - NORFOLK SOUTHERN BRIDGE OVER OH-10
...\Sheets\010_2039C_S0602.dgn 12/10/2024 4:28:15 PM Rohit.Bk

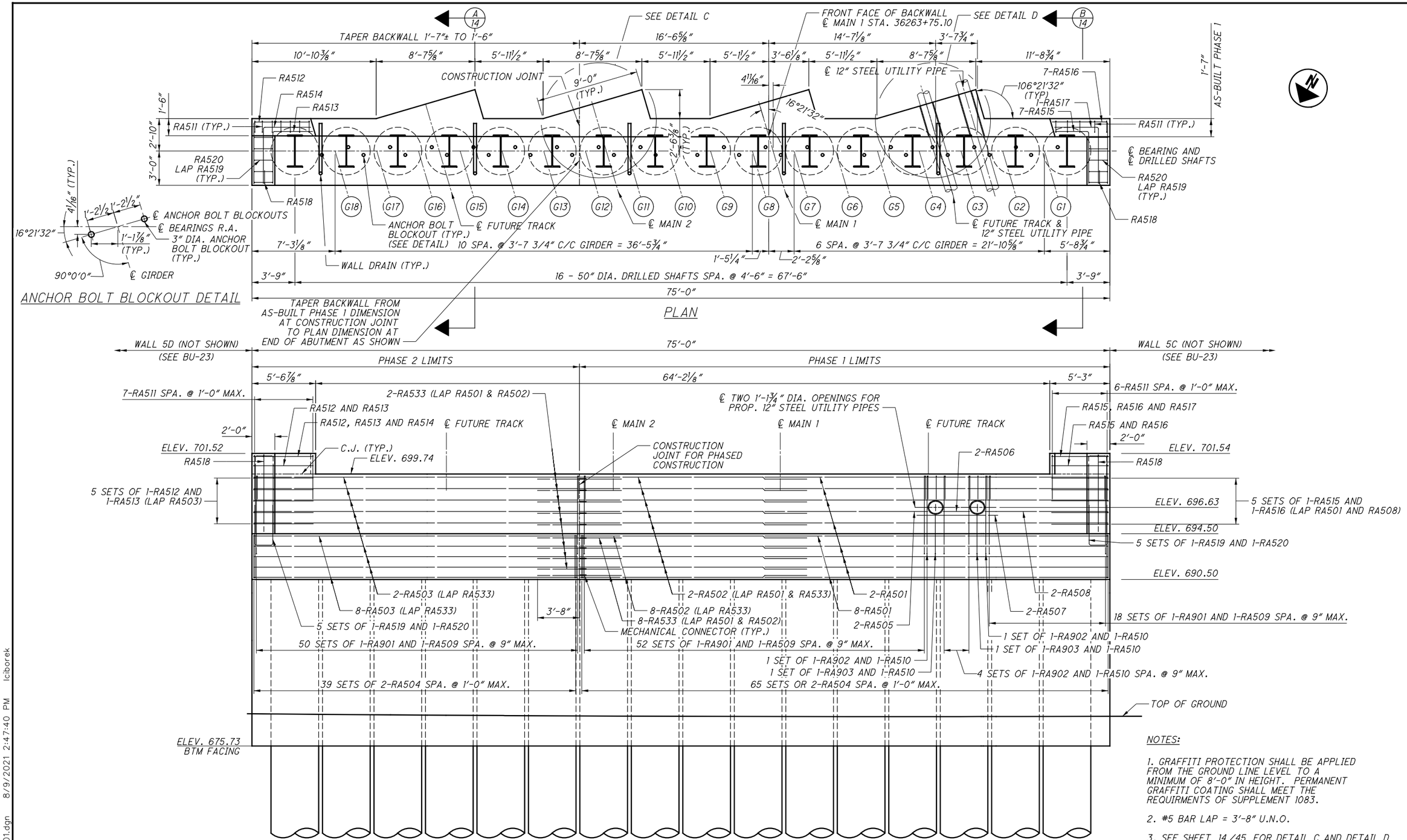

NOTES:

1. GRAFFITI PROTECTION SHALL BE APPLIED FROM THE GROUND LINE LEVEL TO A MINIMUM OF 8'-0" IN HEIGHT. PERMANENT GRAFFITI COATING SHALL MEET THE REQUIRMENTS OF SUPPLEMENT 1083.

2. #5 BAR LAP = 3'-8" U.N.O.

3. SEE SHEET 14/45 FOR DETAIL C AND DETAIL D

NO.	DATE	DESCRIPTION
1	2021-08-03	DC054
0	2019-02-25	RFC

ISSUE RECORD

DESIGN AGENCY
Michael Baker INTERNATIONAL
1111 SUPERIOR AVE E., SUITE 2300, CLEVELAND, OH 44114

DESIGNED	DRAWN	REVIEWED	DATE
MKB	MKB	JWB	11/5/2018
CHECKED	REVISED	STRUCTURE FILE NUMBER	
CDC		1801519	

RECORD PLANS

REAR ABUTMENT PLAN AND ELEVATION
CUY-010-2039
NORFOLK SOUTHERN RAILROAD OVER OH-10

RECORD PLANS

CUY-IR490/SR010-2.09/19.28
PID No. 96833

RECORD PLANS

13/45

15/47

BU-22 - NORFOLK SOUTHERN BRIDGE OVER OH-10
...\Sheets\010_2039C_SR601.dgn 8/9/2021 2:47:40 PM lciborek

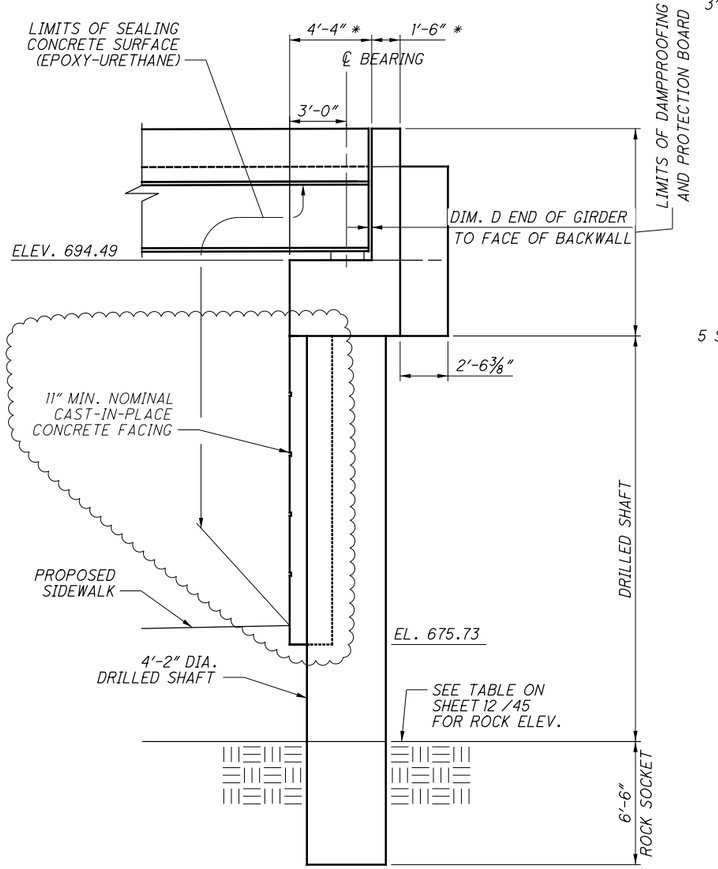

REAR ABUTMENT SECTION

LOOKING UPSTATION OC BLVD.

* NOMINAL DIMENSION
AS-BUILT DIMENSION VARIES
SEE ABUTMENT PLANS

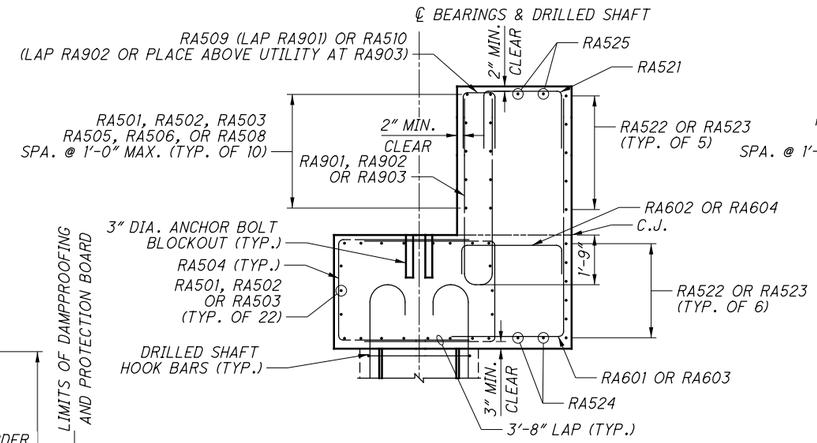

A/13 SECTION

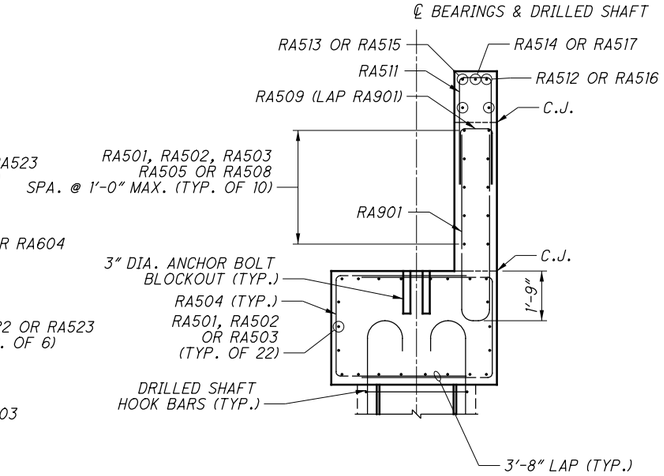

B/13 SECTION

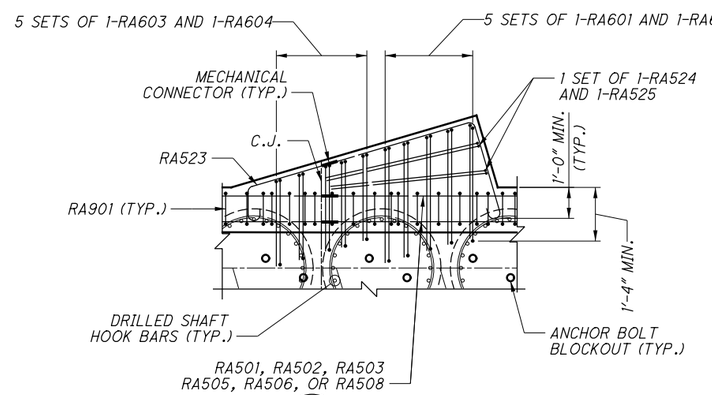

C/13 DETAIL

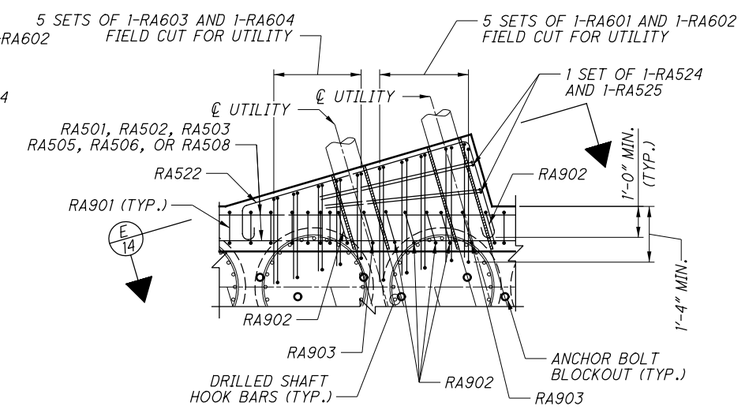

D/13 DETAIL

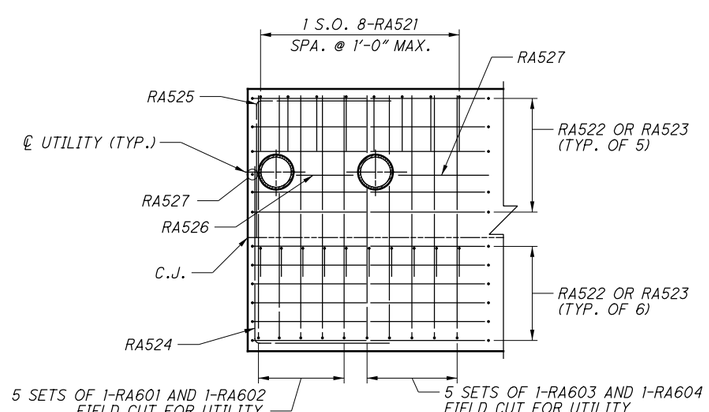

E/14 SECTION

NOTES:

1. ALL FIELD CUT ENDS AND DAMAGED AREAS OF EPOXY COATED REINFORCING STEEL SHALL BE REPAIRED PER CMS 509.09.

2. PHASE 1 AS-BUILT DIMENSIONS MEASURED MARCH 26, 2021 FOLLOWING ERECTION OF PHASE 1 GIRDERS.

3. PHASE 2 AS-BUILT DIMENSIONS MEASURED JULY 26, 2021 FOLLOWING ERECTION OF PHASE 2 GIRDERS.

REAR ABUTMENT DIMENSION D (IN.)

GIRDER	PLAN	AS-BUILT	PHASE
G1	4	2 3/4	1
G2	4	2 1/2	1
G3	4	2 1/2	1
G4	4	2 1/2	1
G5	4	2 1/2	1
G6	4	2 5/8	1
G7	4	2 9/16	1
G8	4	2 3/4	1
G9	4	2 7/8	1
G10	4	2 1/2	1
G11	4	2 1/4	1
G12	4	1 5/8	2
G13	4	2	2
G14	4	3 1/8	2
G15	4	3 1/4	2
G16	4	3 5/8	2
G17	4	3 3/4	2
G18	4	4 1/4	2

NO.	DATE	DESCRIPTION
2	2024-09-10	RECORD DRAWINGS
1	2021-08-03	DC054
0	2019-02-25	RFC

ISSUE RECORD

DESIGN AGENCY
Michael Baker INTERNATIONAL
1111 SUPERIOR AVE E., SUITE 2300, CLEVELAND, OH 44114

DESIGNED	DRAWN	REVIEWED	DATE
MKB	MKB	JWB	11/5/2018
CHECKED	REVISED	STRUCTURE FILE NUMBER	
CDC		1801519	

RECORD PLANS

REAR ABUTMENT SECTIONS
CUY-010-2039
NORFOLK SOUTHERN RAILROAD OVER OH-10

RECORD PLANS

CUY-IR490/SR010-2.09/19.28
PID No. 96833

RECORD PLANS

14/45

16/47

BU-22 - NORFOLK SOUTHERN BRIDGE OVER OH-10
...\Sheets\010_2039C_SR602.dgn 12/10/2024 3:18:25 PM Rohit.Bk

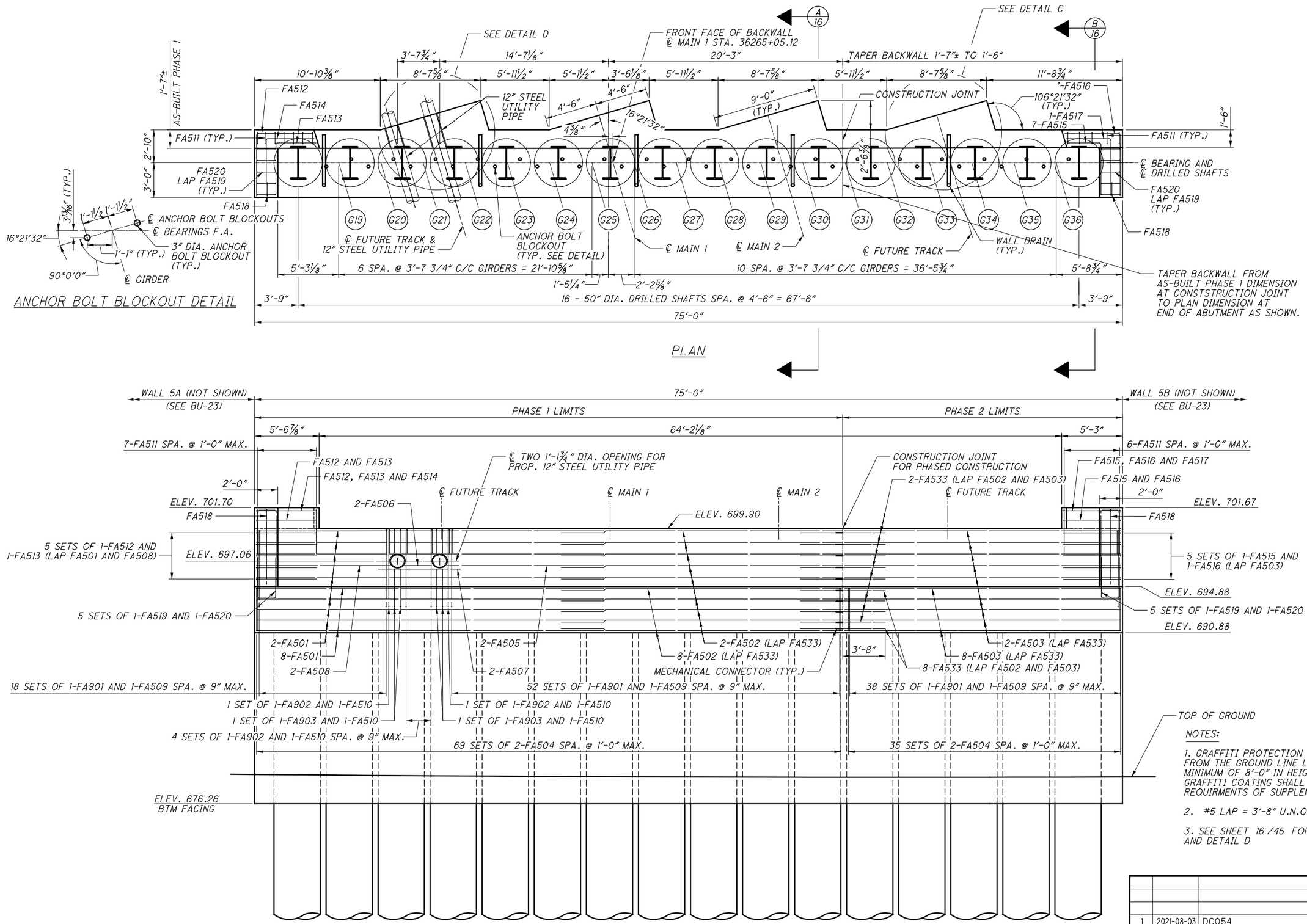

NOTES:

1. GRAFFITI PROTECTION SHALL BE APPLIED FROM THE GROUND LINE LEVEL TO A MINIMUM OF 8'-0" IN HEIGHT. PERMANENT GRAFFITI COATING SHALL MEET THE REQUIRMENTS OF SUPPLEMENT 1083.

2. #5 LAP = 3'-8" U.N.O.

3. SEE SHEET 16 /45 FOR DETAIL C AND DETAIL D

NO.	DATE	DESCRIPTION
1	2021-08-03	DC054
0	2019-02-25	RFC

ISSUE RECORD

DESIGN AGENCY
Michael Baker INTERNATIONAL
1111 SUPERIOR AVE E., SUITE 2300, CLEVELAND, OH 44114

DESIGNED	DRAWN	REVIEWED	DATE
MKB	MKB	JWB	11/5/2018
CHECKED	REVISED	STRUCTURE FILE NUMBER	
CDC		1801519	

RECORD PLANS

FORWARD ABUTMENT PLAN AND ELEVATION
CUY-010-2039
NORFOLK SOUTHERN RAILROAD OVER OH-10

RECORD PLANS

CUY-IR490/SR010-2.09/19.28
PID No. 96833

BU-22 - NORFOLK SOUTHERN BRIDGE OVER OH-10
...\Sheets\010_2039C_SF601.dgn 8/9/2021 2:48:04 PM lciborek

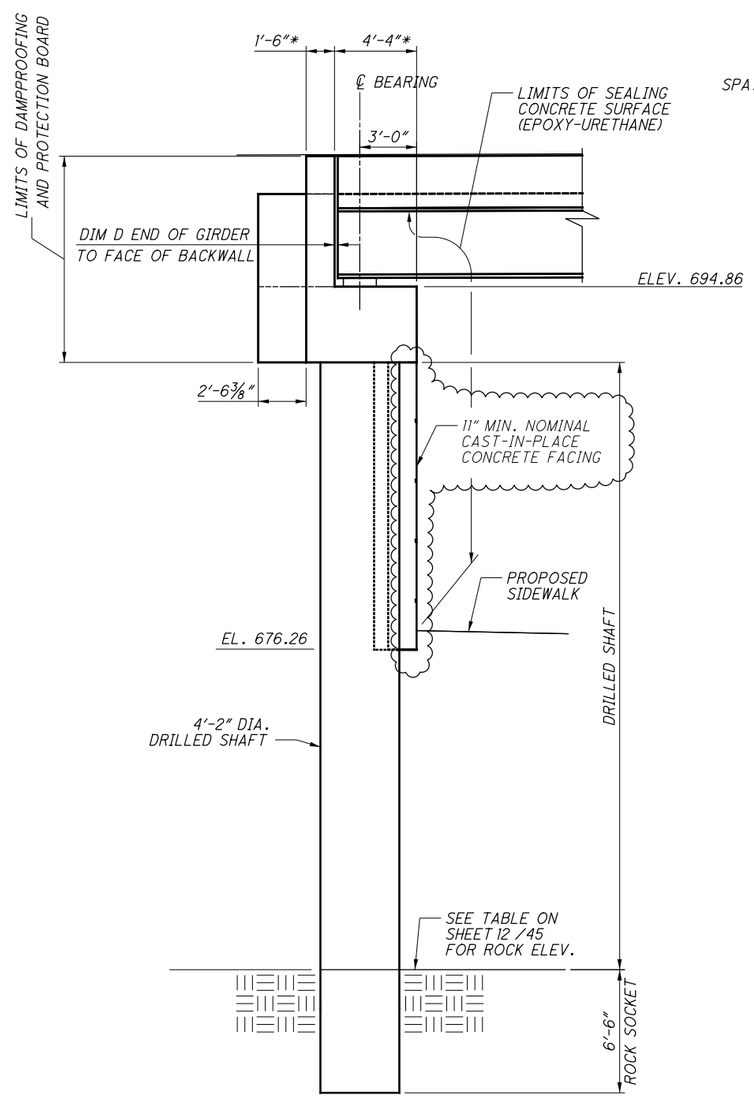

FORWARD ABUTMENT SECTION

LOOKING UPSTATION OC BLVD.
* NOMINAL DIMENSION
AS-BUILT DIMENSION VARIES
SEE ABUTMENT PLANS

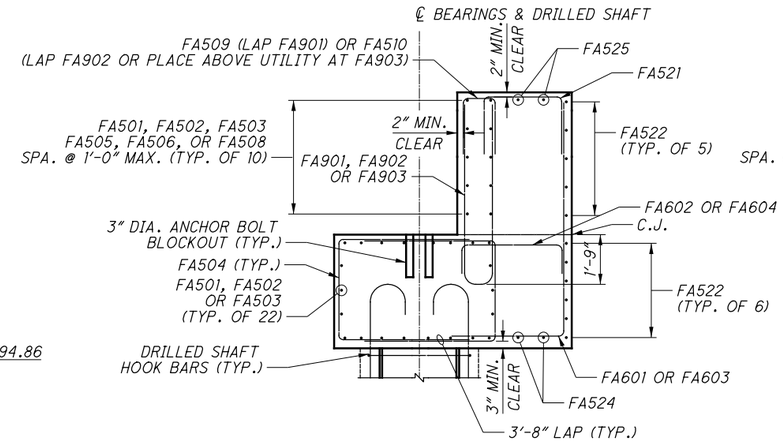

A/15 SECTION

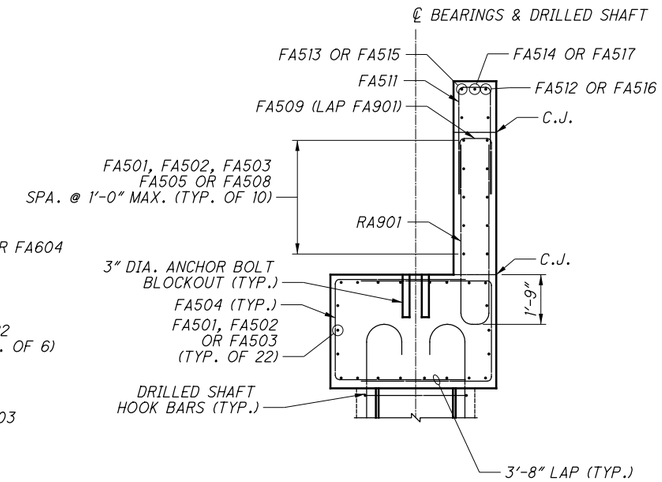

B/15 SECTION

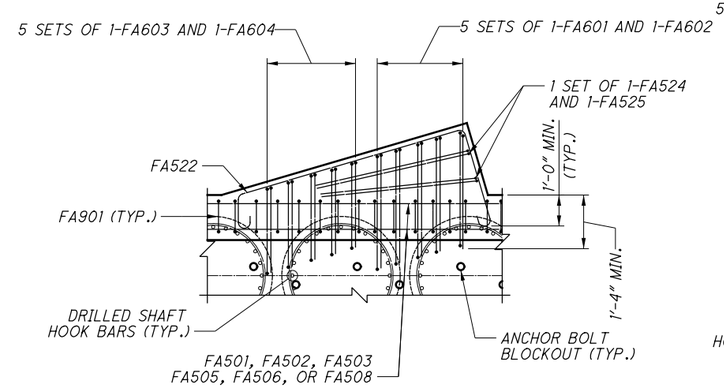

C/15 DETAIL

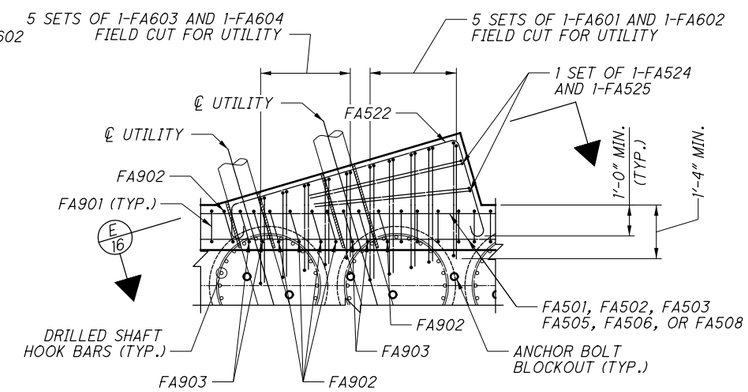

D/15 DETAIL

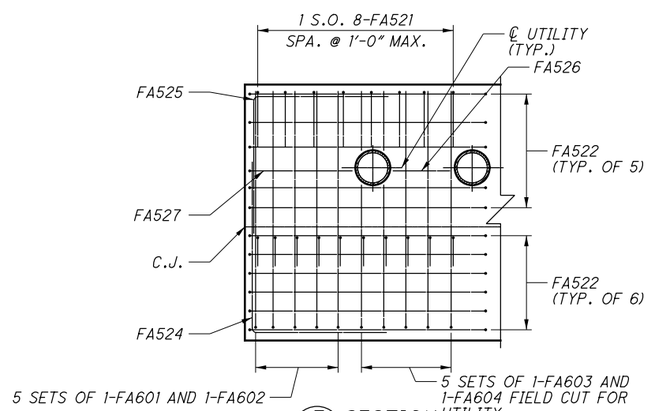

E/16 SECTION

FORWARD ABUTMENT DIMENSION D (IN.)			
GIRDER	PLAN	AS-BUILT	PHASE
G19	4	3 1/8	1
G20	4	3 5/8	1
G21	4	3 1/2	1
G22	4	3 5/8	1
G23	4	3 1/2	1
G24	4	3 1/2	1
G25	4	3 3/4	1
G26	4	3 1/2	1
G27	4	2 1/4	1
G28	4	2 1/2	1
G29	4	3	1
G30	4	2 5/8	2
G31	4	2 3/8	2
G32	4	2 5/8	2
G33	4	4	2
G34	4	4 3/8	2
G35	4	4 3/8	2
G36	4	4	2

NOTES:

1. ALL FIELD CUT ENDS AND DAMAGED AREAS OF EPOXY COATED REINFORCING STEEL SHALL BE REPAIRED PER CMS 509.09.

2. PHASE 1 AS-BUILT DIMENSIONS MEASURED MARCH 26, 2021 FOLLOWING ERECTION OF PHASE 1 GIRDERS.

3. PHASE 2 AS-BUILT DIMENSIONS MEASURED JULY 26, 2021 FOLLOWING ERECTION OF PHASE 2 GIRDERS.

NO.	DATE	DESCRIPTION
2	2024-09-10	RECORD DRAWINGS
1	2021-08-03	DC054
0	2019-02-25	RFC

ISSUE RECORD

DESIGN AGENCY
Michael Baker INTERNATIONAL
1111 SUPERIOR AVE E., SUITE 2300, CLEVELAND, OH 44114

DESIGNED	DRAWN	REVIEWED	DATE
MKB	MKB	JWB	11/5/2018
CHECKED	REVISED	STRUCTURE FILE NUMBER	
CDC	---	1801519	

RECORD PLANS

FORWARD ABUTMENT DETAILS
CUY-010-2039
NORFOLK SOUTHERN RAILROAD OVER OH-10

RECORD PLANS

CUY-IR490/SR010-2.09/19.28
PID No. 96833

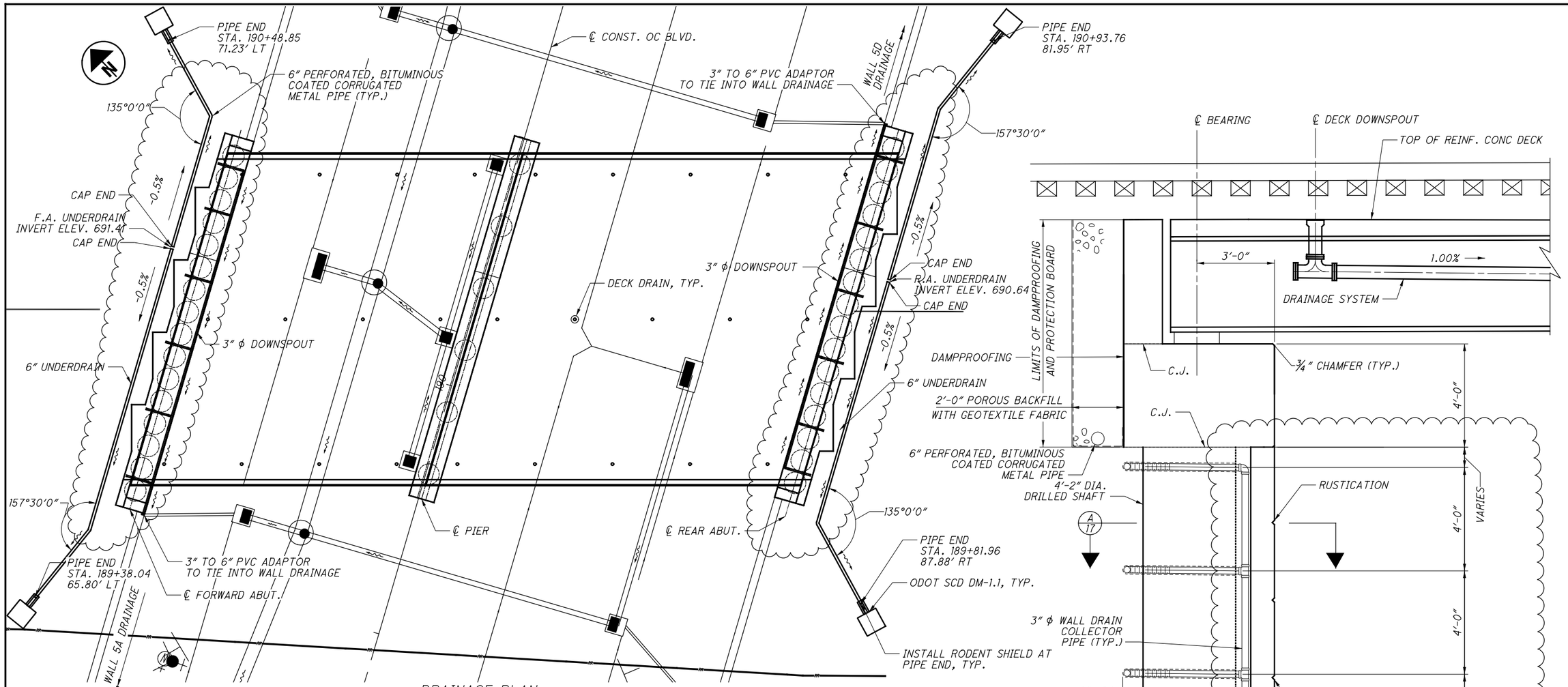

DRAINAGE PLAN

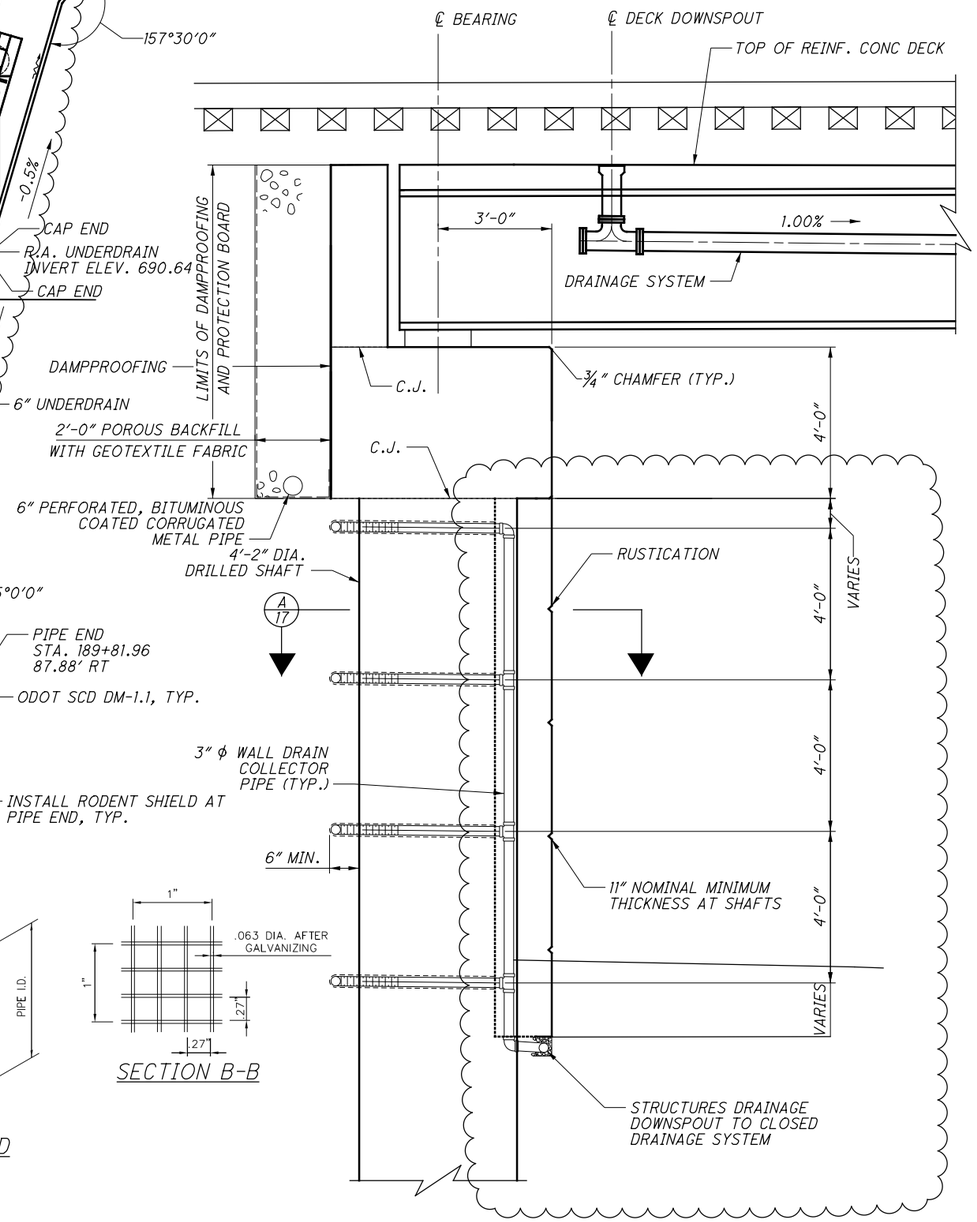

ABUTMENT SECTION

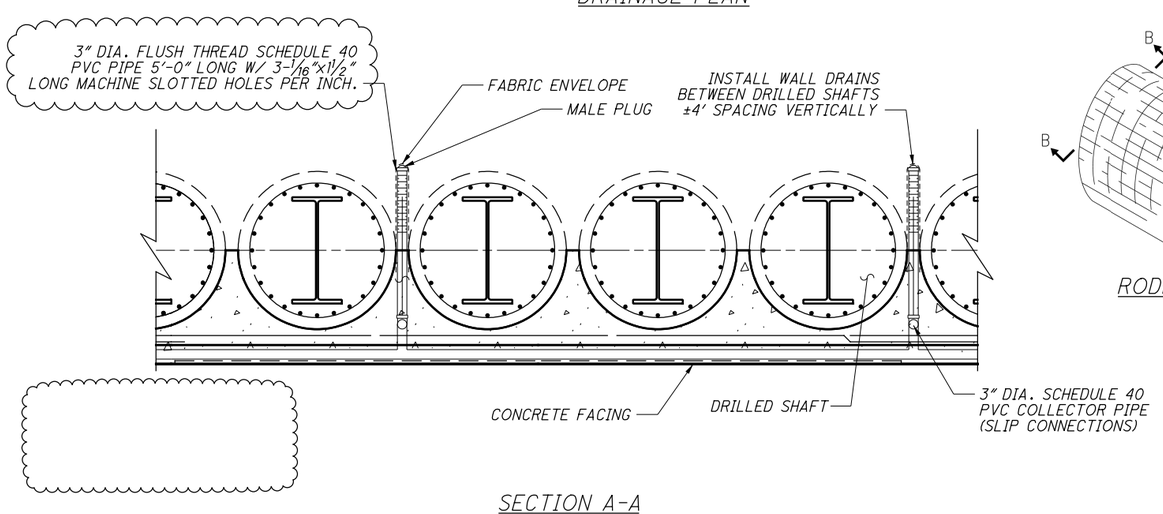

SECTION A-A

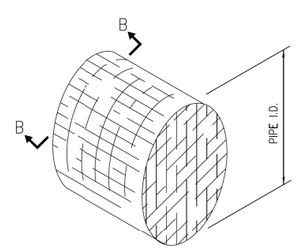

RODENT SHIELD

SECTION B-B

NOTES:

1. SEE SHEET 40 OF 45 FOR STRUCTURAL DRAINAGE DETAILS

NO.	DATE	DESCRIPTION
1	2024-09-10	RECORD DRAWINGS
0	2019-02-25	RFC

ISSUE RECORD

DESIGN AGENCY
Michael Baker INTERNATIONAL
1111 SUPERIOR AVE E., SUITE 2300, CLEVELAND, OH 44114

DESIGNED	DRAWN	REVIEWED	DATE
LJH	BAH	JWB	11/5/2018
CHECKED	REVISED	STRUCTURE FILE NUMBER	
CDC		1801519	

RECORD PLANS

DRAINAGE DETAILS
CUY-010-2039
NORFOLK SOUTHERN RAILROAD OVER OH-10

RECORD PLANS

CUY-IR490/SR010-2.09/19.28
PID No. 96833

RECORD PLANS

17/45

19/47

BU-22 - NORFOLK SOUTHERN BRIDGE OVER OH-10
...\Sheets\010_2039C_SF603.dgn 12/11/2024 9:21:04 AM Rohit.Bk

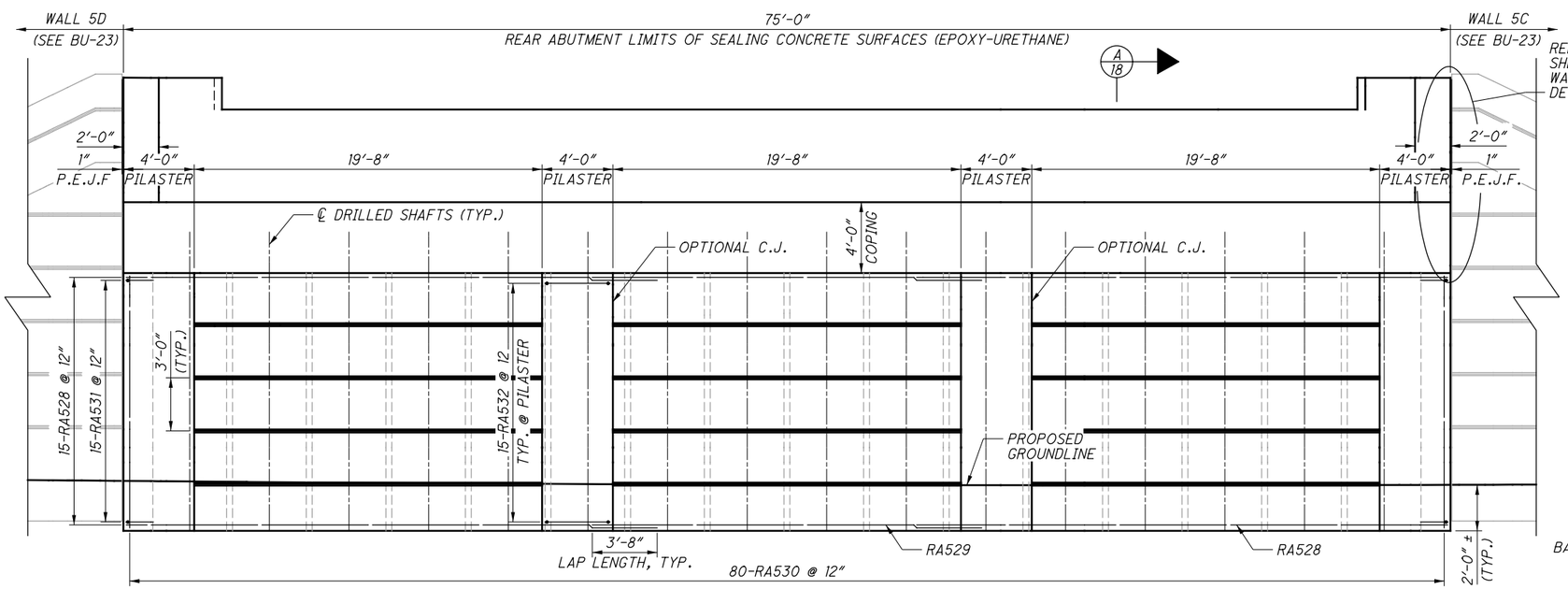

ELEVATION

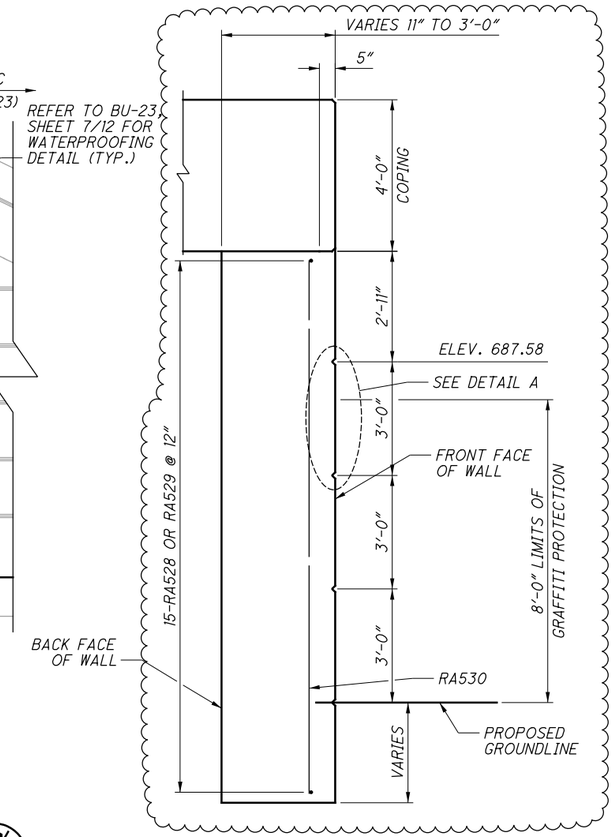

A/18 SECTION

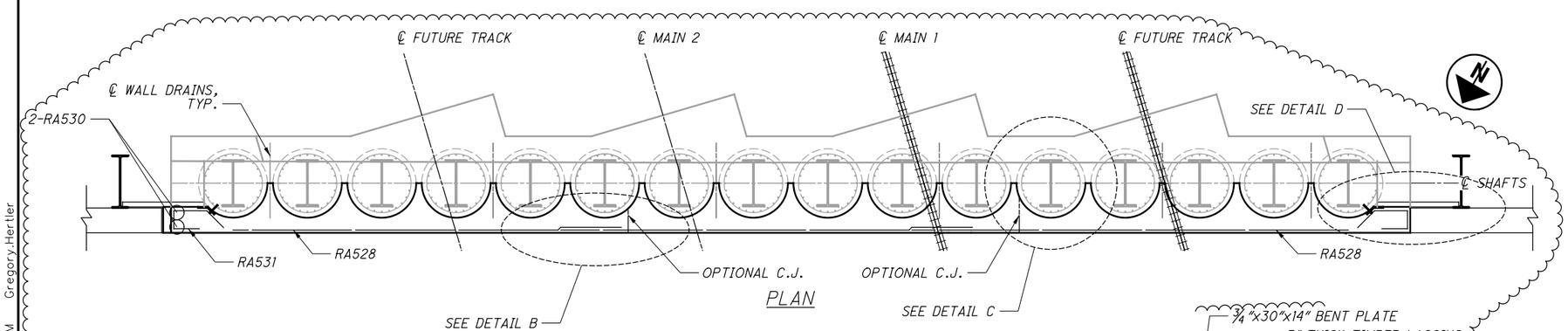

PLAN

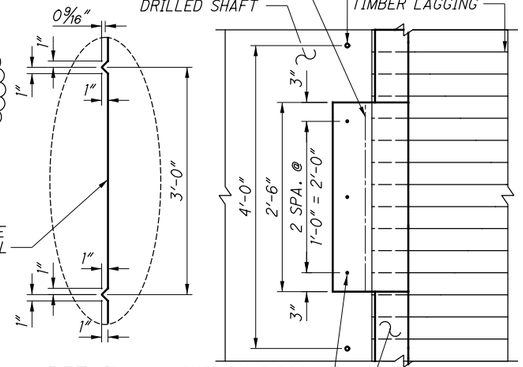

DETAIL A

INTERMEDIATE TIMBER LAGGING

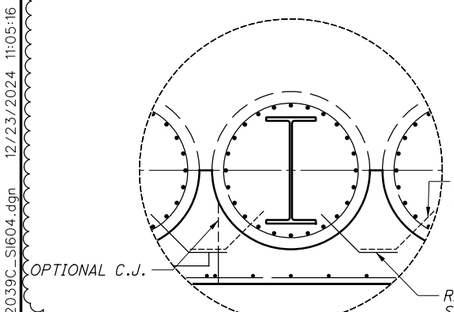

DETAIL C

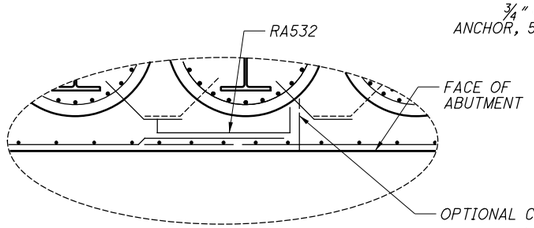

DETAIL B

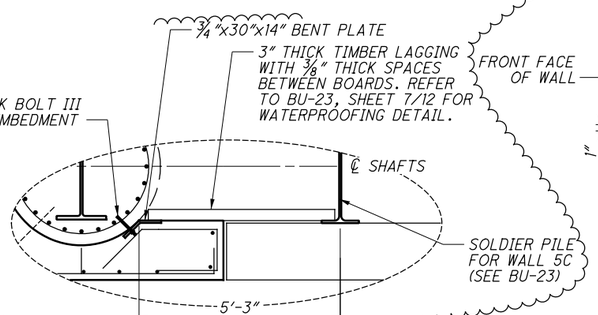

DETAIL D

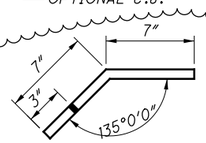

BENT PLATE DETAIL

NOTES:

1. SEE SHEET 17 OF 45 FOR ABUTMENT DRAINAGE DETAILS.
2. CHAMFER ALL EDGES 1".
3. #5 BAR LAP SPLICE = 2'-0" UNLESS NOTED OTHERWISE.

NO.	DATE	DESCRIPTION
1	2024-09-10	RECORD DRAWINGS
0	2019-02-25	RFC

ISSUE RECORD

DESIGN AGENCY
Michael Baker INTERNATIONAL
1111 SUPERIOR AVE E., SUITE 2300, CLEVELAND, OH 44114

DESIGNED	DRAWN	REVIEWED	DATE
BAH	BAH	JWB	11/5/18
CHECKED	REVISED	STRUCTURE FILE NUMBER	
LJH		1801519	

RECORD PLANS

REAR ABUTMENT FACING DETAILS
CUY-010-2039
NORFOLK SOUTHERN RAILROAD OVER OH-10

RECORD PLANS

CUY-IR490/SR010-2.09/19.28
PID No. 96833

RECORD PLANS

18/45

20/47

BU-22 - NORFOLK SOUTHERN BRIDGE OVER OH-10
...\Sheets\010_2039C_S604.dgn 12/23/2024 11:05:16 AM Gregory.Hertler

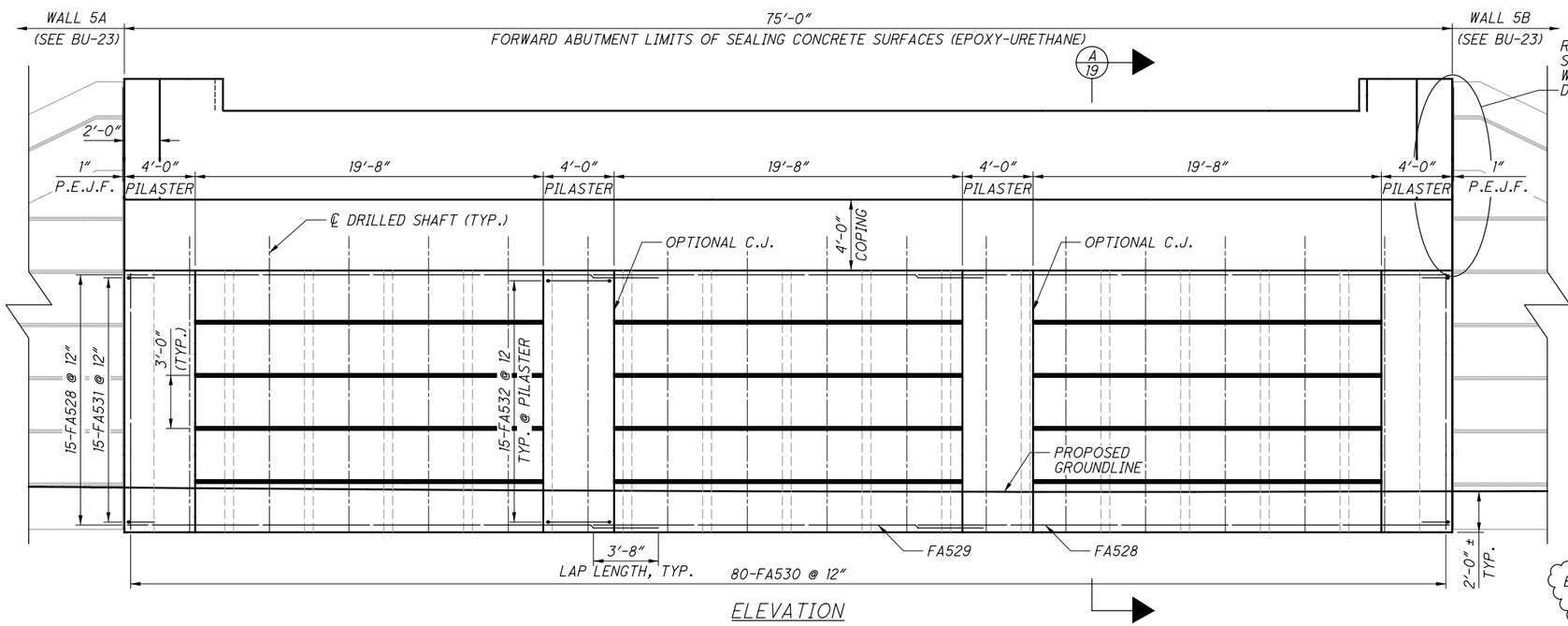

ELEVATION

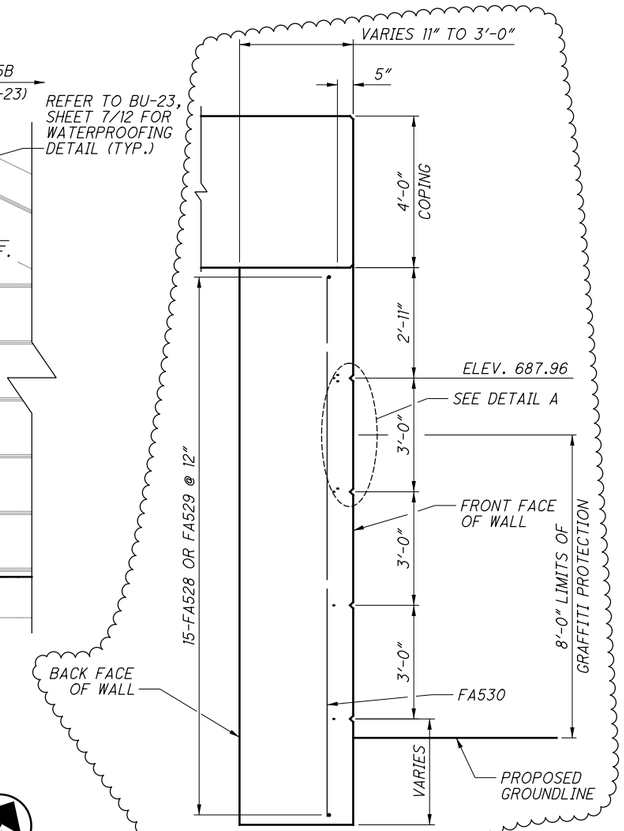

A/19 SECTION

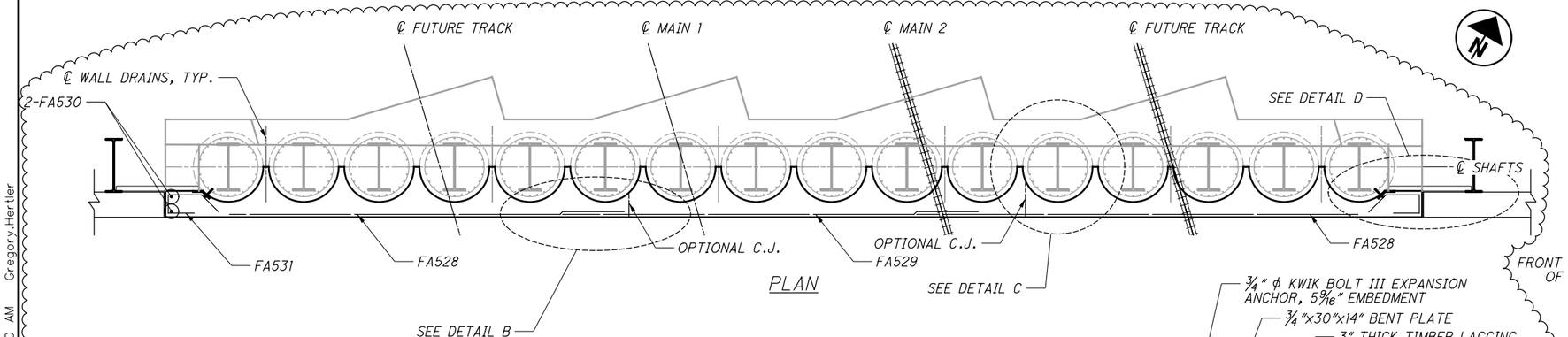

PLAN

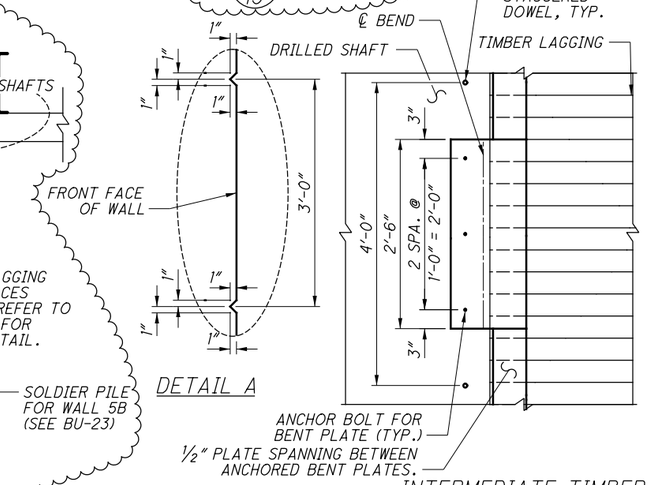

DETAIL A

INTERMEDIATE TIMBER LAGGING

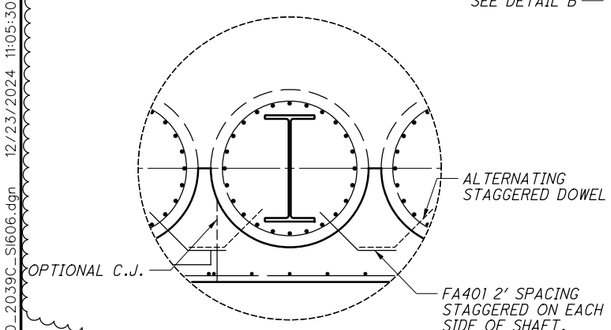

DETAIL C

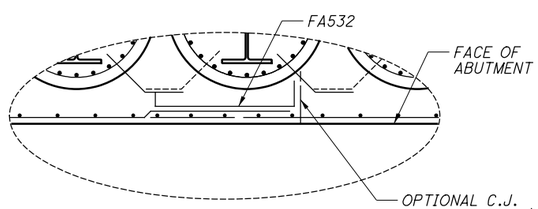

DETAIL B

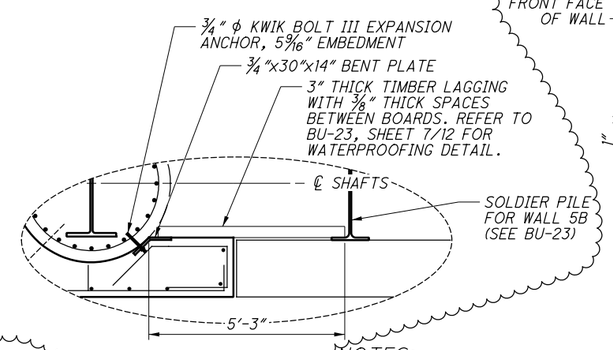

DETAIL D

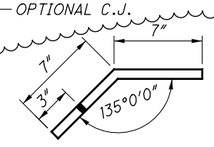

BENT PLATE DETAIL

NOTES:

1. SEE SHEET 17 OF 45 FOR ABUTMENT DRAINAGE DETAILS.
2. CHAMFER ALL EDGES 1".
3. #5 BAR LAP SPLICE = 2'-0" UNLESS NOTED OTHERWISE

NO.	DATE	DESCRIPTION
1	2024-09-10	RECORD DRAWINGS
0	2019-02-25	RFC

ISSUE RECORD

DESIGN AGENCY
Michael Baker INTERNATIONAL
1111 SUPERIOR AVE E., SUITE 2300, CLEVELAND, OH 44114

DESIGNED	DRAWN	REVIEWED	DATE
BAH	BAH	JWB	11/5/18
CHECKED	REVISED	STRUCTURE FILE NUMBER	
LJH		1801519	

RECORD PLANS

FORWARD ABUTMENT FACING DETAILS
CUY-010-2039
NORFOLK SOUTHERN RAILROAD OVER OH-10

RECORD PLANS

CUY-IR490/SR010-2.09/19.28
PID No. 96833

RECORD PLANS

19/45

21/47

BU-22 - NORFOLK SOUTHERN BRIDGE OVER OH-10
...\Sheets\010_2039C_SI606.dgn 12/23/2024 11:05:30 AM Gregory.Hertler

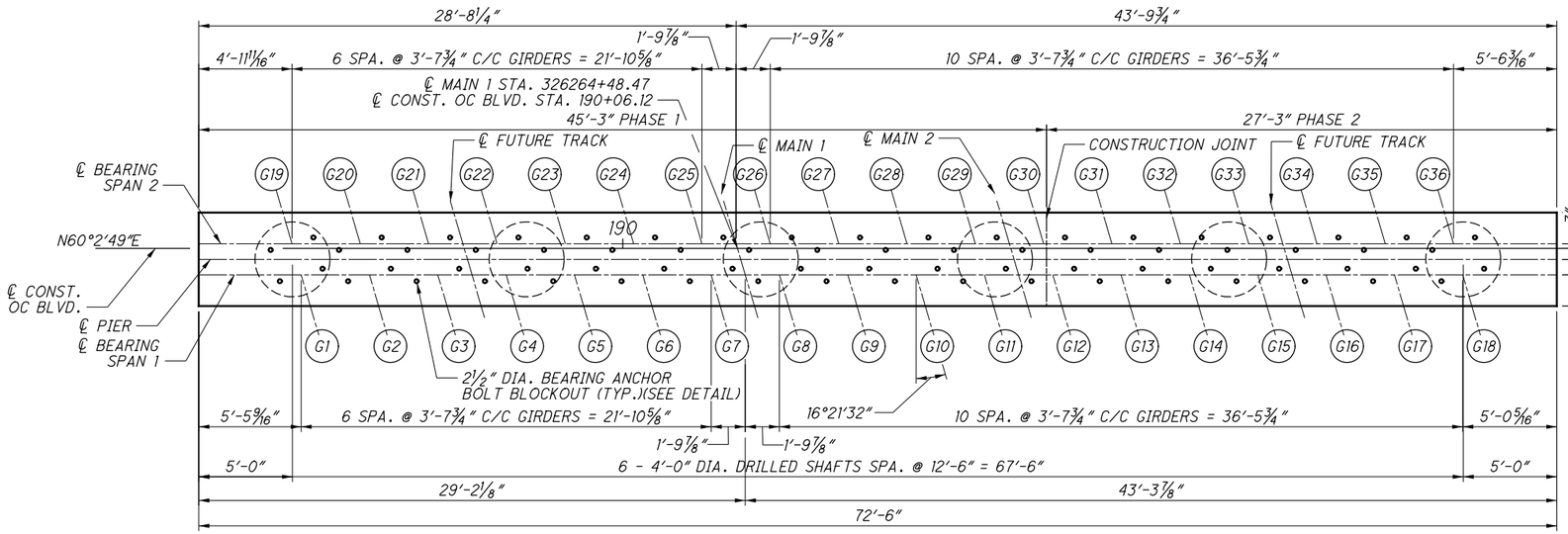

PLAN

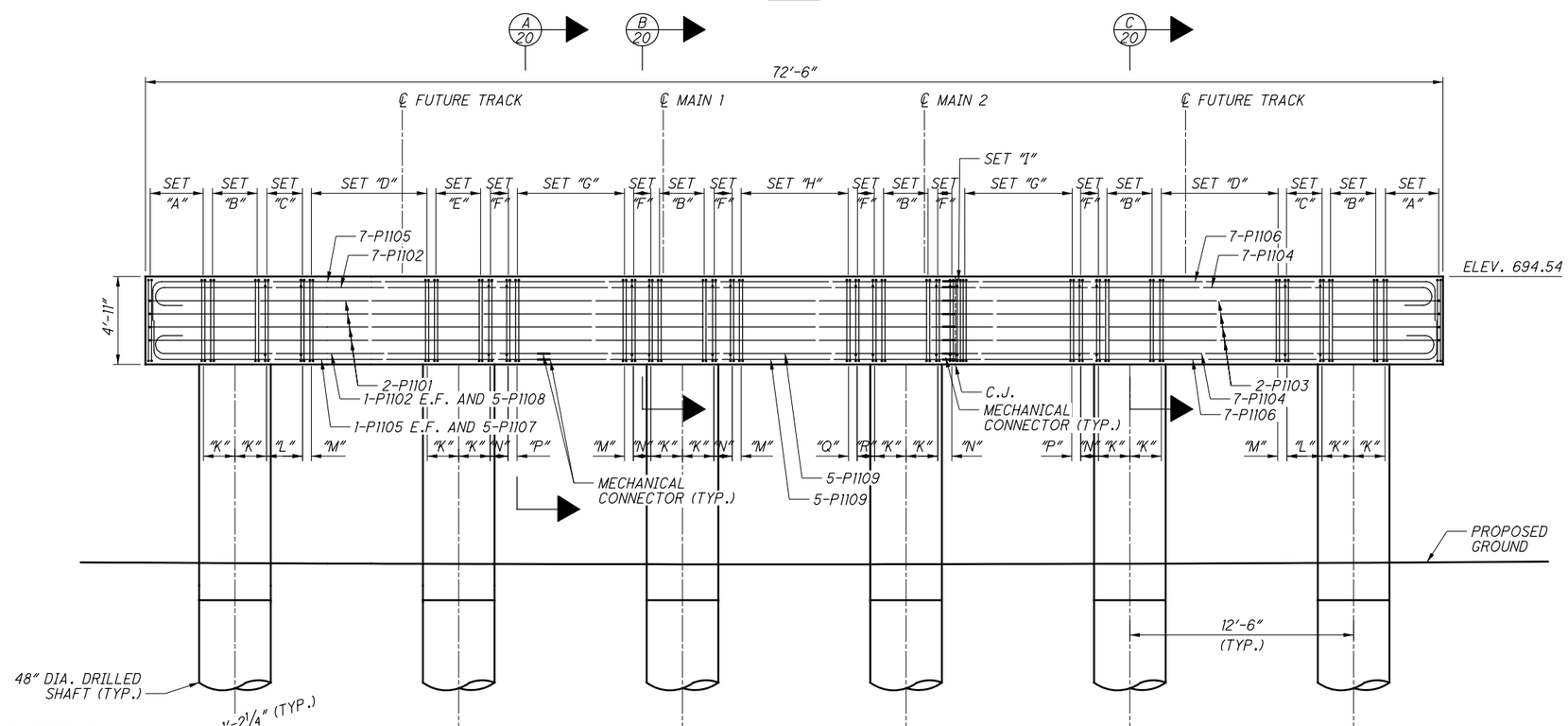

ELEVATION

DRILLED SHAFT / COLUMN REINFORCING NOT SHOWN

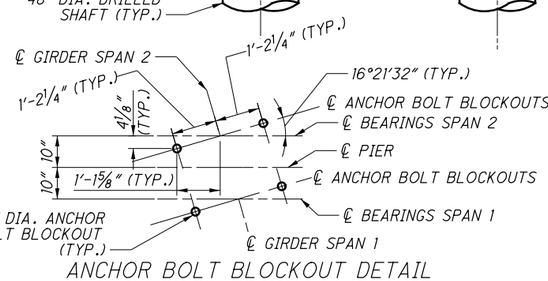

ANCHOR BOLT BLOCKOUT DETAIL

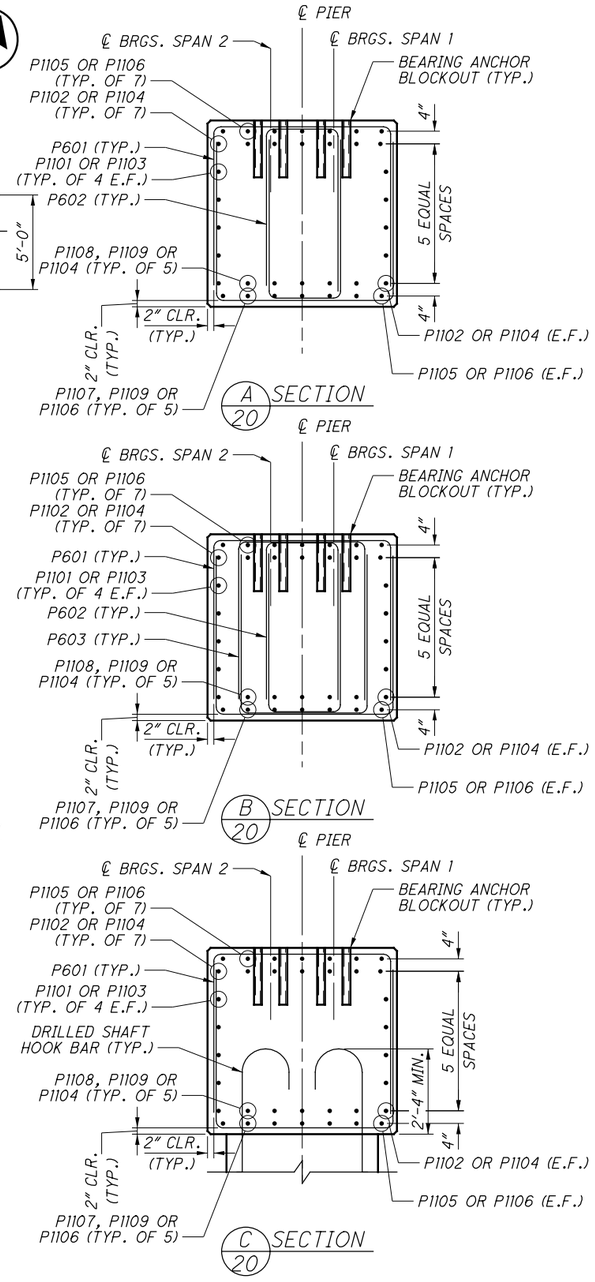

NOTES:

1. SEE PIER AESTHETIC DETAILS FOR ADDITIONAL INFORMATION
2. #6 BAR LAP = 3'-10" UNLESS NOTED OTHERWISE

PIER CAP REINFORCING STIRRUP SETS

SET "A" = 4 SETS OF 2-P601 AND 2-P602 SPA. @ 1'-0" MAX.
SET "B" = 7 SETS OF 2-P601 SPA. @ 6" MAX.
SET "C" = 5 SETS OF 2-P601, 2-P602 AND 2-P603 SPA. @ 6" MAX.
SET "D" = 16 SETS OF 2-P601 AND 2-P602 SPA. @ 6" MAX.
SET "E" = 6 SETS OF 2-P601 SPA. @ 6" MAX.
SET "F" = 3 SETS OF 2-P601, 2-P602 AND 2-P603 SPA. @ 6" MAX.
SET "G" = 15 SETS OF 2-P601 AND 2-P602 SPA. @ 6" MAX.
SET "H" = 14 SETS OF 2-P601 AND 2-P602 SPA. @ 6" MAX.
SET "I" = 1 SET OF 2-P601, 2-P602 AND 2-P603

"K" = 1'-9 1/4"
"L" = 2'-0"
"M" = 6"
"N" = 1'-0"
"P" = 3 3/4"
"Q" = 5 1/8"
"R" = 1'-0 3/8"

NO.	DATE	DESCRIPTION
0	2/25/19	RFC

ISSUE RECORD

DESIGN AGENCY
Michael Baker INTERNATIONAL
1111 SUPERIOR AVE E. SUITE 2300, CLEVELAND, OH 44114

DESIGNED	DRAWN	REVIEWED	DATE
MKB	MKB	JWB	11/5/2018
CHECKED	REVISED	STRUCTURE FILE NUMBER	
BCM	—	1801519	

RECORD PLANS

PIER PLAN AND ELEVATION
CUY-010-2039
NORFOLK SOUTHERN RAILROAD OVER OH-10

RECORD PLANS

CUY-IR490/SR010-2.09/19.28
PID No. 96833

RECORD PLANS

RFC SUBMITTAL
BU-22 - NORFOLK SOUTHERN BRIDGE OVER OH-10
...\Sheets\010_2039C_SI601.dgn 3/18/2019 1:40:38 PM ccummings

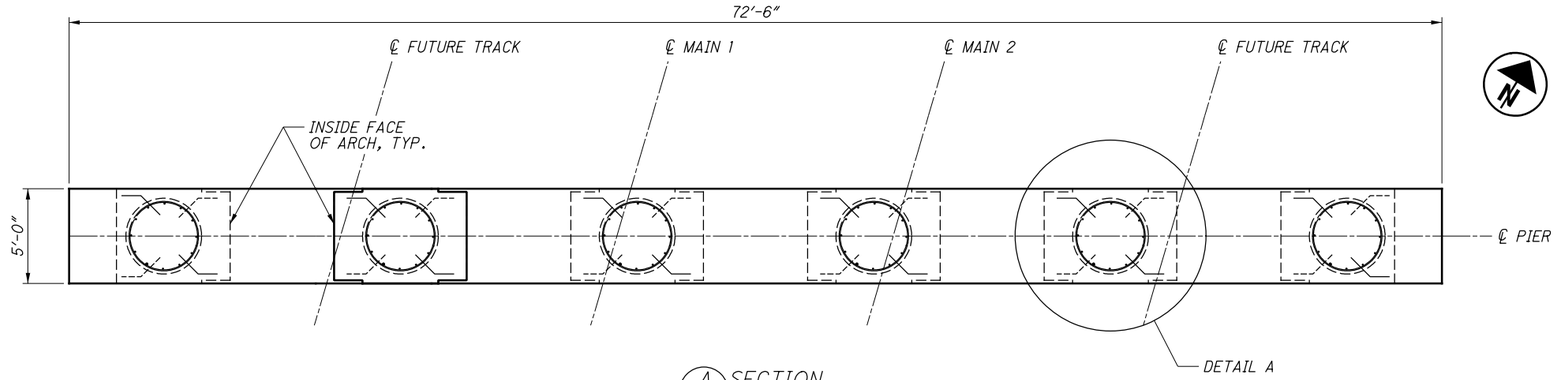

A/21 SECTION
PIER FACING PLAN

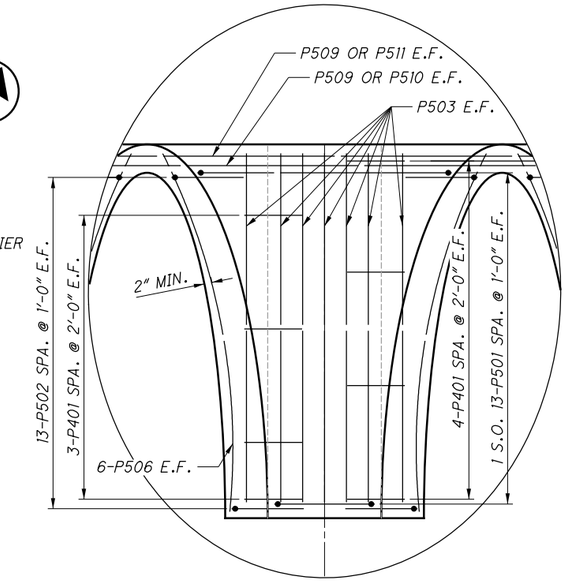

DETAIL D
RUSTICATION NOT SHOWN FOR CLARITY

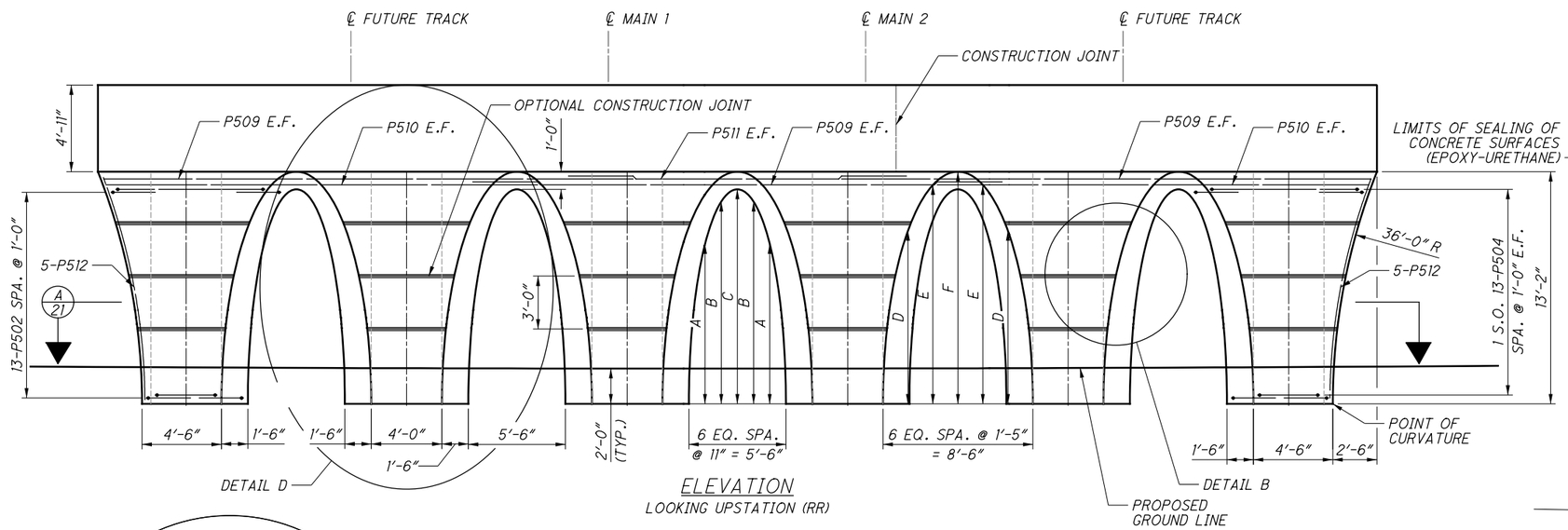

ELEVATION
LOOKING UPSTATION (RR)

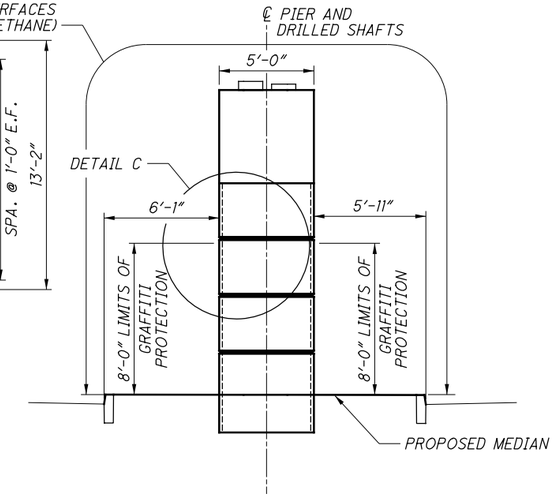

PIER END ELEVATION

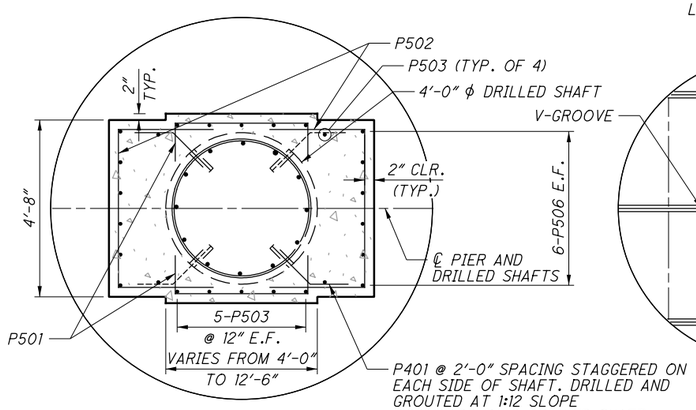

DETAIL A

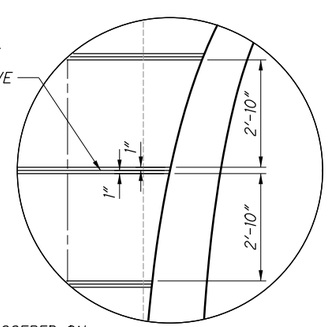

DETAIL B
REINFORCEMENT NOT SHOWN FOR CLARITY

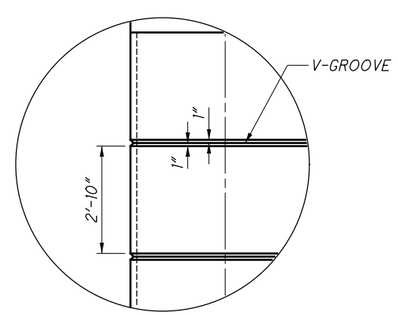

DETAIL C
REINFORCEMENT NOT SHOWN FOR CLARITY

ARCH DIMENSIONS	
A	9'-0¾"
B	11'-5⅝"
C	12'-2"
D	9'-9¾"
E	12'-4⅞"
F	13'-2"

NOTES:

1. #5 BAR LAP SPLICE = 3'-8" UNLESS NOTED OTHERWISE.

NO.	DATE	DESCRIPTION
0	2/25/19	RFC

ISSUE RECORD

DESIGN AGENCY
Michael Baker INTERNATIONAL
1111 SUPERIOR AVE E., SUITE 2300, CLEVELAND, OH 44114

DESIGNED	DRAWN	REVIEWED	DATE
BAH	BAH	JWB	11/5/18
CHECKED	REVISED	STRUCTURE FILE NUMBER	
LJH		1801519	

RECORD PLANS

PIER AESTHETIC DETAILS
CUY-010-2039
NORFOLK SOUTHERN RAILROAD OVER OH-10

RECORD PLANS

CUY-IR490/SR010-2.09/19.28
PID No. 96833

RECORD PLANS

RFC SUBMITTAL
BU-22 - NORFOLK SOUTHERN BRIDGE OVER OH-10
...\Sheets\010_2039C_S1603.dgn 3/18/2019 1:41:00 PM ccummings

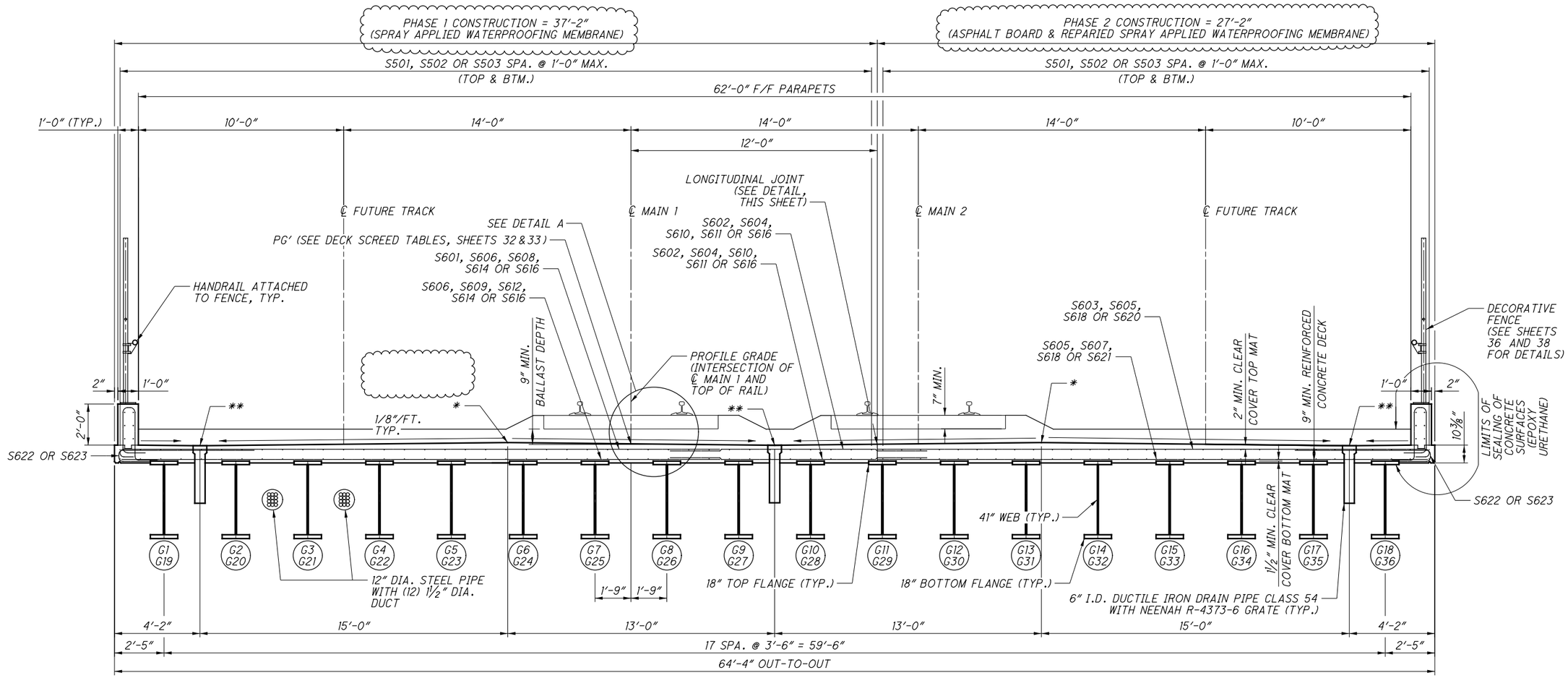

TRANSVERSE SECTION

(LOOKING UPSTATION RR)

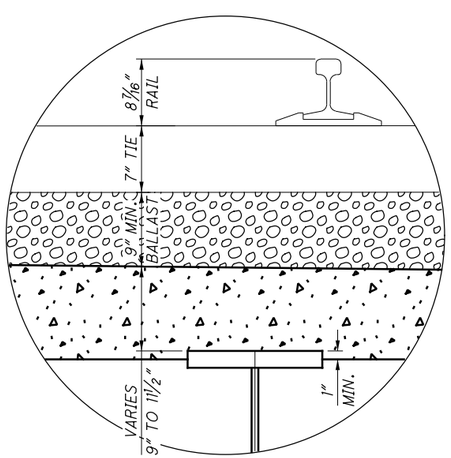

DETAIL A

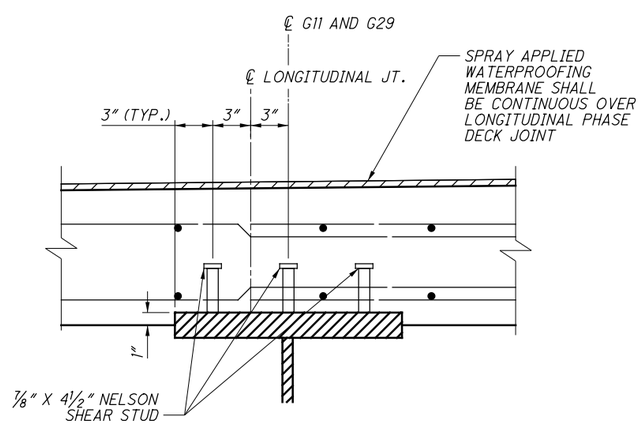

LONGITUDINAL JOINT DETAIL

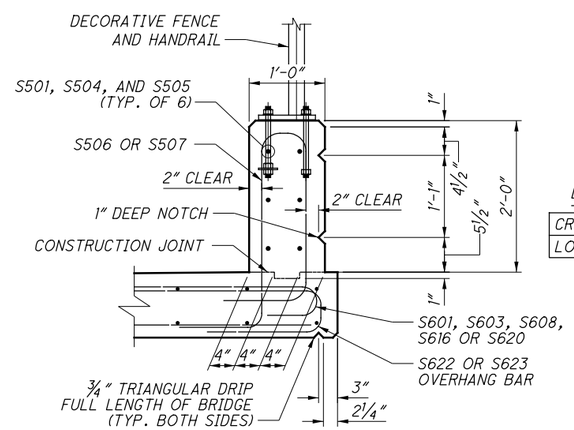

PARAPET SECTION

LEGEND:

* = CROWN
** = LOW POINT

DECK THICKNESS

CROWN	10 7/8"
LOW POINT	9"

NOTES:

1. #5 BAR LAP SPLICE = 2'-0" UNLESS NOTED OTHERWISE
2. #6 BAR LAP SPLICE = 2'-5" UNLESS NOTED OTHERWISE
3. GRAFFITI PROTECTION SHALL BE APPLIED TO PARAPETS
4. 12" DIA. STEEL PIPE SHALL BE BLACK STEEL PIPE OR GALVANIZED STEEL PIPE, WALL THICKNESS 0.375"

NO.	DATE	DESCRIPTION
1	2024-09-10	RECORD DRAWINGS
0	2019-02-25	RFC

ISSUE RECORD

DESIGN AGENCY
Michael Baker INTERNATIONAL
1111 SUPERIOR AVE E., SUITE 2300, CLEVELAND, OH 44114

DESIGNED	DRAWN	REVIEWED	DATE
JCC	JCC	JWB	11/5/18
CHECKED	REVISED	STRUCTURE FILE NUMBER	
LPC		1801519	

RECORD PLANS

TRANSVERSE SECTION
CUY-010-2039
NORFOLK SOUTHERN RAILROAD OVER OH-10

RECORD PLANS

CUY-IR490/SR010-2.09/19.28
PID No. 96833

RECORD PLANS

22/45

24/47

BU-22 - NORFOLK SOUTHERN BRIDGE OVER OH-10
...\Sheets\010_2039c_ST601.dgn 11/22/2024 11:43:03 AM Rohit.Bk

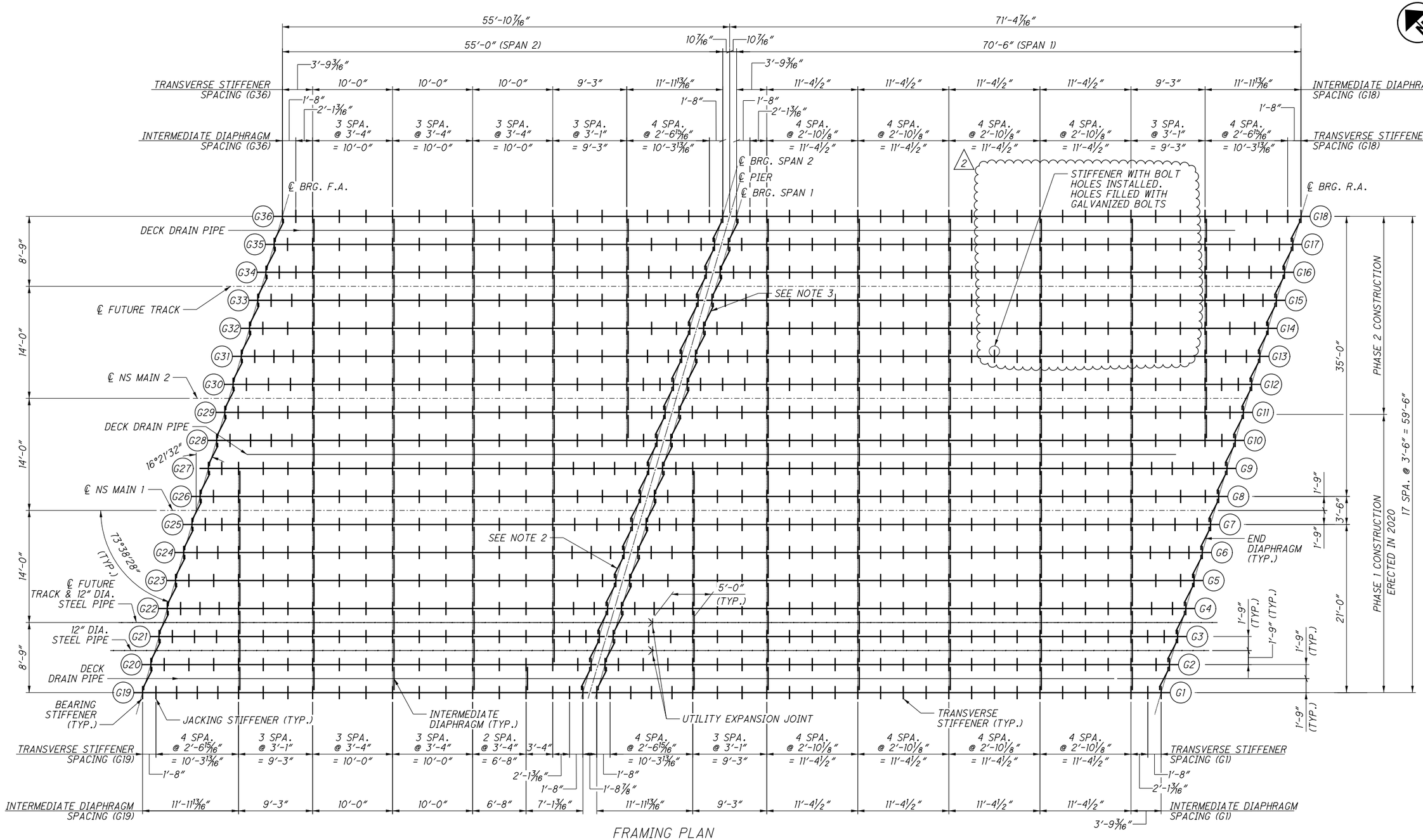

FRAMING PLAN

NOTE: ← UPSTATION

1. 12" DIA. STEEL PIPE SHALL BE BLACK STEEL PIPE OR GALVANIZED STEEL PIPE, WALL THICKNESS 0.375".

2. REMOVE PHASE 1, SPAN 2 PIER DIAPHRAGMS TO PROVIDE ACCESS FOR GIRDER TRIMMING. TRIM PHASE 1, SPAN 2 GIRDERS AS DETAILED IN THE GIRDER ELEVATIONS. REINSTALL DIAPHRAGMS WITH NEW CONNECTION HARDWARE.

3. TRIM PHASE 2, SPAN 1 GIRDERS AS DETAILED IN THE GIRDER ELEVATIONS PRIOR TO ERECTION.

NOTES, CONTINUED:

4. PHASE 1, SPAN 1 GIRDERS WERE SHIFTED DOWNSTATION RELATIVE TO CL OF BEARINGS AND PHASE 1, SPAN 2 GIRDERS WERE SHIFTED UPSTATION RELATIVE TO CL OF BEARINGS DURING ERECTION TO PROVIDE ADDITIONAL GAP BETWEEN GIRDER ENDS AT PIERS.

NO.	DATE	DESCRIPTION
2	2024-09-10	RECORD DRAWINGS
1	2021-08-03	DC054
0	2019-02-25	RFC

ISSUE RECORD

DESIGN AGENCY
Michael Baker INTERNATIONAL
1111 SUPERIOR AVE E., SUITE 2300, CLEVELAND, OH 44114

DESIGNED	DRAWN	REVIEWED	DATE
LJH	JCC	JWB	11/5/18
CHECKED	REVISED	STRUCTURE FILE NUMBER	
LPC		1801519	

RECORD PLANS

FRAMING PLAN
CUY-010-2039
NORFOLK SOUTHERN RAILROAD OVER OH-10
RECORD PLANS

CUY-IR490/SR010-2.09/19.28
PID No. 96833
RECORD PLANS

23/45

25/47

BU-22 - NORFOLK SOUTHERN BRIDGE OVER OH-10
...\Sheets\010_2039C_SS601.dgn 11/22/2024 11:43:09 AM Rohit.Bk

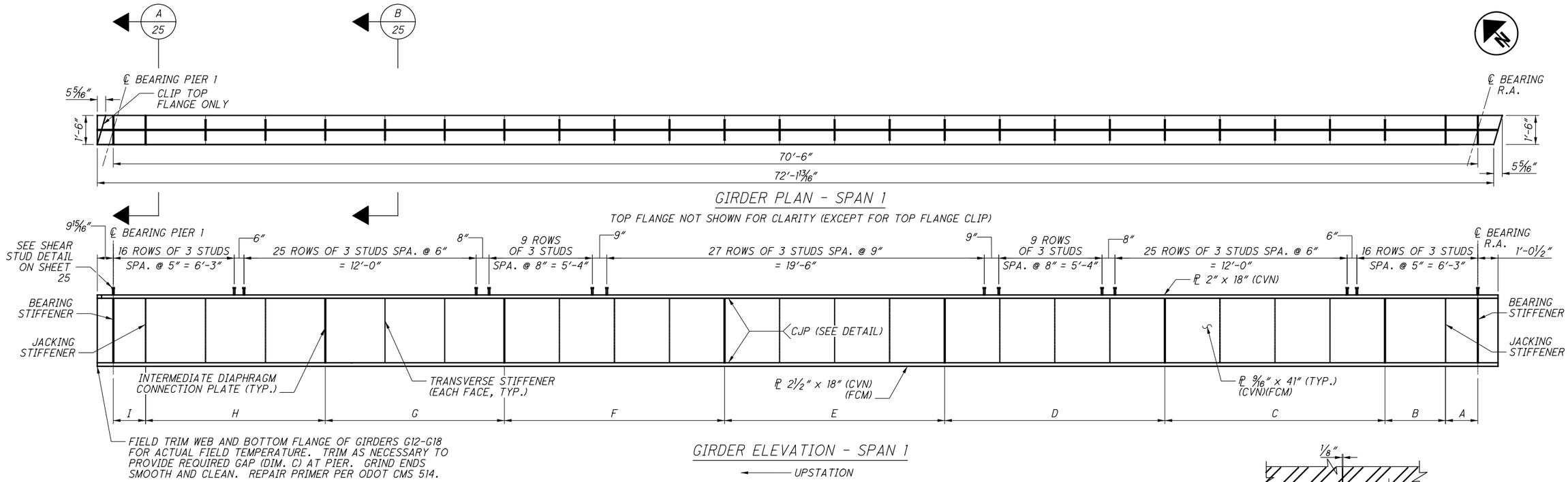

INTERMEDIATE DIAPHRAGM AND TRANSVERSE STIFFENER SPACING

GIRDER	I	H	G	F	E	D	C	B	A
G1	1'-8"	4 SPA. @ 2'-6 15/16" = 10'-3 13/16"	3 SPA. @ 3'-1" = 9'-3"	4 SPA. @ 2'-10 1/8" = 11'-4 1/2"	4 SPA. @ 2'-10 1/8" = 11'-4 1/2"	4 SPA. @ 2'-10 1/8" = 11'-4 1/2"	4 SPA. @ 2'-10 1/8" = 11'-4 1/2"	2'-1 3/16"	1'-8"
G2	1'-8"	3'-1 9/16"	4 SPA. @ 2'-10 1/8" = 11'-4 1/2"	4 SPA. @ 2'-10 1/8" = 11'-4 1/2"	4 SPA. @ 2'-10 1/8" = 11'-4 1/2"	4 SPA. @ 2'-10 1/8" = 11'-4 1/2"	3 SPA. @ 3'-1" = 9'-3"	3 SPA. @ 3'-1 1/8" = 9'-3 7/16"	1'-8"
G3	1'-8"	2 SPA. @ 2'-1 1/8" = 4'-1 7/8"	4 SPA. @ 2'-10 1/8" = 11'-4 1/2"	4 SPA. @ 2'-10 1/8" = 11'-4 1/2"	4 SPA. @ 2'-10 1/8" = 11'-4 1/2"	4 SPA. @ 2'-10 1/8" = 11'-4 1/2"	3 SPA. @ 3'-1" = 9'-3"	3 SPA. @ 2'-9 1/16" = 8'-3 1/8"	1'-8"
G4	1'-8"	2 SPA. @ 2'-7 1/8" = 5'-2 3/16"	4 SPA. @ 2'-10 1/8" = 11'-4 1/2"	4 SPA. @ 2'-10 1/8" = 11'-4 1/2"	4 SPA. @ 2'-10 1/8" = 11'-4 1/2"	4 SPA. @ 2'-10 1/8" = 11'-4 1/2"	3 SPA. @ 3'-1" = 9'-3"	3 SPA. @ 2'-4 15/16" = 7'-2 13/16"	1'-8"
G5	1'-8"	2 SPA. @ 3'-1 1/4" = 6'-2 1/2"	4 SPA. @ 2'-10 1/8" = 11'-4 1/2"	4 SPA. @ 2'-10 1/8" = 11'-4 1/2"	4 SPA. @ 2'-10 1/8" = 11'-4 1/2"	4 SPA. @ 2'-10 1/8" = 11'-4 1/2"	3 SPA. @ 3'-1" = 9'-3"	2 SPA. @ 3'-1 1/4" = 6'-2 1/2"	1'-8"
G6	1'-8"	3 SPA. @ 2'-4 15/16" = 7'-2 7/8"	4 SPA. @ 2'-10 1/8" = 11'-4 1/2"	4 SPA. @ 2'-10 1/8" = 11'-4 1/2"	4 SPA. @ 2'-10 1/8" = 11'-4 1/2"	4 SPA. @ 2'-10 1/8" = 11'-4 1/2"	3 SPA. @ 3'-1" = 9'-3"	2 SPA. @ 2'-7 1/16" = 5'-2 1/8"	1'-8"
G7	1'-8"	3 SPA. @ 2'-9 1/16" = 8'-3 3/16"	4 SPA. @ 2'-10 1/8" = 11'-4 1/2"	4 SPA. @ 2'-10 1/8" = 11'-4 1/2"	4 SPA. @ 2'-10 1/8" = 11'-4 1/2"	4 SPA. @ 2'-10 1/8" = 11'-4 1/2"	3 SPA. @ 3'-1" = 9'-3"	2 SPA. @ 2'-0 15/16" = 4'-1 13/16"	1'-8"
G8	1'-8"	3 SPA. @ 3'-1 3/16" = 9'-3 1/2"	4 SPA. @ 2'-10 1/8" = 11'-4 1/2"	4 SPA. @ 2'-10 1/8" = 11'-4 1/2"	4 SPA. @ 2'-10 1/8" = 11'-4 1/2"	4 SPA. @ 2'-10 1/8" = 11'-4 1/2"	3 SPA. @ 3'-1" = 9'-3"	3'-1 1/2"	1'-8"
G9	1'-8"	4 SPA. @ 2'-6 15/16" = 10'-3 13/16"	4 SPA. @ 2'-10 1/8" = 11'-4 1/2"	4 SPA. @ 2'-10 1/8" = 11'-4 1/2"	4 SPA. @ 2'-10 1/8" = 11'-4 1/2"	4 SPA. @ 2'-10 1/8" = 11'-4 1/2"	3 SPA. @ 3'-1" = 9'-3"	2'-1 3/16"	1'-8"
G10	1'-8"	2'-1 3/16"	3 SPA. @ 3'-1" = 9'-3"	4 SPA. @ 2'-10 1/8" = 11'-4 1/2"	4 SPA. @ 2'-10 1/8" = 11'-4 1/2"	4 SPA. @ 2'-10 1/8" = 11'-4 1/2"	4 SPA. @ 2'-10 1/8" = 11'-4 1/2"	4 SPA. @ 2'-6 15/16" = 10'-3 13/16"	1'-8"
G11	1'-8"	3'-1 1/2"	3 SPA. @ 3'-1" = 9'-3"	4 SPA. @ 2'-10 1/8" = 11'-4 1/2"	4 SPA. @ 2'-10 1/8" = 11'-4 1/2"	4 SPA. @ 2'-10 1/8" = 11'-4 1/2"	4 SPA. @ 2'-10 1/8" = 11'-4 1/2"	3 SPA. @ 3'-1 3/16" = 9'-3 1/2"	1'-8"
G12	1'-8"	2 SPA. @ 2'-0 15/16" = 4'-1 13/16"	3 SPA. @ 3'-1" = 9'-3"	4 SPA. @ 2'-10 1/8" = 11'-4 1/2"	4 SPA. @ 2'-10 1/8" = 11'-4 1/2"	4 SPA. @ 2'-10 1/8" = 11'-4 1/2"	4 SPA. @ 2'-10 1/8" = 11'-4 1/2"	3 SPA. @ 2'-9 1/16" = 8'-3 3/16"	1'-8"
G13	1'-8"	2 SPA. @ 2'-7 1/16" = 5'-2 1/8"	3 SPA. @ 3'-1" = 9'-3"	4 SPA. @ 2'-10 1/8" = 11'-4 1/2"	4 SPA. @ 2'-10 1/8" = 11'-4 1/2"	4 SPA. @ 2'-10 1/8" = 11'-4 1/2"	4 SPA. @ 2'-10 1/8" = 11'-4 1/2"	3 SPA. @ 2'-4 15/16" = 7'-2 7/8"	1'-8"
G14	1'-8"	2 SPA. @ 3'-1 1/4" = 6'-2 1/2"	3 SPA. @ 3'-1" = 9'-3"	4 SPA. @ 2'-10 1/8" = 11'-4 1/2"	4 SPA. @ 2'-10 1/8" = 11'-4 1/2"	4 SPA. @ 2'-10 1/8" = 11'-4 1/2"	4 SPA. @ 2'-10 1/8" = 11'-4 1/2"	2 SPA. @ 3'-1 1/4" = 6'-2 1/2"	1'-8"
G15	1'-8"	3 SPA. @ 2'-4 15/16" = 7'-2 13/16"	3 SPA. @ 3'-1" = 9'-3"	4 SPA. @ 2'-10 1/8" = 11'-4 1/2"	4 SPA. @ 2'-10 1/8" = 11'-4 1/2"	4 SPA. @ 2'-10 1/8" = 11'-4 1/2"	4 SPA. @ 2'-10 1/8" = 11'-4 1/2"	2 SPA. @ 2'-7 1/8" = 5'-2 3/16"	1'-8"
G16	1'-8"	3 SPA. @ 2'-9 1/16" = 8'-3 1/8"	3 SPA. @ 3'-1" = 9'-3"	4 SPA. @ 2'-10 1/8" = 11'-4 1/2"	4 SPA. @ 2'-10 1/8" = 11'-4 1/2"	4 SPA. @ 2'-10 1/8" = 11'-4 1/2"	4 SPA. @ 2'-10 1/8" = 11'-4 1/2"	2 SPA. @ 2'-0 15/16" = 4'-1 7/8"	1'-8"
G17	1'-8"	3 SPA. @ 3'-1 1/8" = 9'-3 7/16"	3 SPA. @ 3'-1" = 9'-3"	4 SPA. @ 2'-10 1/8" = 11'-4 1/2"	4 SPA. @ 2'-10 1/8" = 11'-4 1/2"	4 SPA. @ 2'-10 1/8" = 11'-4 1/2"	4 SPA. @ 2'-10 1/8" = 11'-4 1/2"	3'-1 9/16"	1'-8"
G18	1'-8"	4 SPA. @ 2'-6 15/16" = 10'-3 13/16"	3 SPA. @ 3'-1" = 9'-3"	4 SPA. @ 2'-10 1/8" = 11'-4 1/2"	4 SPA. @ 2'-10 1/8" = 11'-4 1/2"	4 SPA. @ 2'-10 1/8" = 11'-4 1/2"	4 SPA. @ 2'-10 1/8" = 11'-4 1/2"	2'-1 3/16"	1'-8"

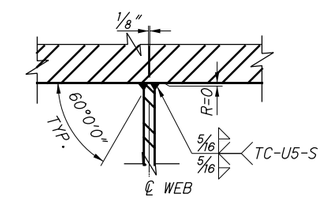

FLANGE TO WEB WELD

FULL PENETRATION (CJP) OF JOINT REQUIRED. WELD TO BE SYMMETRICAL ABOUT CENTERLINE OF WEB; EXCESSIVE UNBALANCE SHALL BE CAUSE FOR REJECTION. GOUGE ROOT TO SOUND METAL BEFORE WELDING SECOND SIDE.

NOTES:

1. ALL STEEL IS ASTM A709, GRADE 50 AND PAINTED, UNLESS NOTED OTHERWISE. PRIME COAT SHALL BE SHOP APPLIED. INTERMEDIATE COAT AND FINISH COAT SHALL BE FIELD APPLIED.

2. (CVN) DENOTES CHARPY V-NOTCH TEST IS REQUIRED. WHERE A SHAPE OR PLATE IS DESIGNATED (CVN), FURNISH MATERIAL THAT MEETS THE MINIMUM NOTCH TOUGHNESS REQUIREMENTS AS SPECIFIED IN AREMA TABLE 15-1-14.

3. (FCM) DENOTES FRACTURE CRITICAL MEMBER.

4. SECTION H.2.6.B.1 OF THE NORFOLK SOUTHERN PUBLIC PROJECT MANUAL STATES, "IN ADDITION TO THOSE MEMBERS DESIGNATED AS FCM BY AREMA, ALL WELDED PLATE GIRDERS SHALL BE CONSIDERED FCM REGARDLESS OF ANY PROVIDED REDUNDANCY." THEREFORE, THESE MEMBERS ARE DESIGNATED AS FCM.

5. SEE SHEETS 26 & 27 FOR BEARING STIFFENER, INTERMEDIATE DIAPHRAGM CONNECTION PLATE & DIAPHRAGM DETAILS.

6. HIGH STRENGTH BOLTS SHALL BE 1" DIAMETER, ASTM A325, MECHANICALLY GALVANIZED. HOT-DIPPED GALVANIZED BOLTS ARE NOT PERMITTED.

NO.	DATE	DESCRIPTION
1	2021-08-03	DC054
0	2019-02-25	RFC

ISSUE RECORD

DESIGN AGENCY
Michael Baker INTERNATIONAL
1111 SUPERIOR AVE E., SUITE 2300, CLEVELAND, OH 44114

DESIGNED	DRAWN	REVIEWED	DATE
JCC	JCC	JWB	11/5/18
CHECKED	REVISED	STRUCTURE FILE NUMBER	
LPC		1801519	

RECORD PLANS

GIRDER ELEVATION - SPAN 1
CUY-010-2039
NORFOLK SOUTHERN RAILROAD OVER OH-10

RECORD PLANS

CUY-IR490/SR010-2.09/19.28
PID No. 96833

RECORD PLANS

BU-22 - NORFOLK SOUTHERN BRIDGE OVER OH-10
...\Sheets\010_2039C_SS602.dgn 8/9/2021 2:48:45 PM lciborek

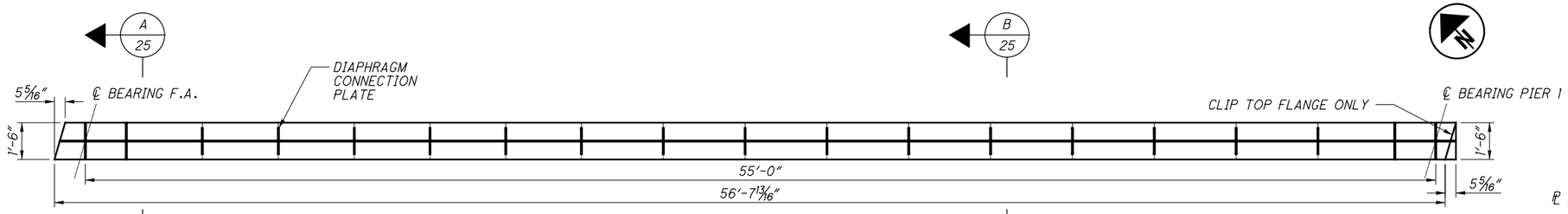

GIRDER PLAN - SPAN 2

TOP FLANGE NOT SHOWN FOR CLARITY EXCEPT FOR TOP FLANGE CLIP

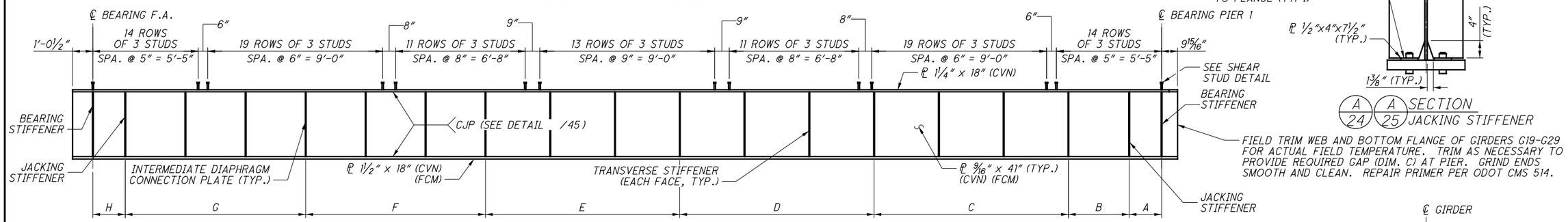

FIELD TRIM WEB AND BOTTOM FLANGE OF GIRDERS G19-G29 FOR ACTUAL FIELD TEMPERATURE. TRIM AS NECESSARY TO PROVIDE REQUIRED GAP (DIM. C) AT PIER. GRIND ENDS SMOOTH AND CLEAN. REPAIR PRIMER PER ODOT CMS 514.

GIRDER ELEVATION - SPAN 2

← UPSTATION

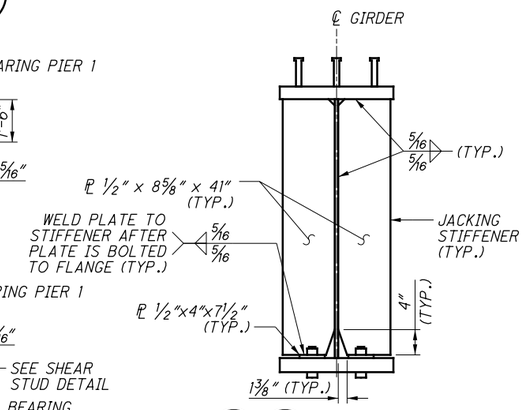

A/24 A/25 SECTION JACKING STIFFENER

INTERMEDIATE DIAPHRAGM AND TRANSVERSE STIFFENER SPACING

GIRDER	H	G	F	E	D	C	B	A
G19	1'-8"	4 SPA. @ 2'-6 15/16" = 10'-3 13/16"	3 SPA. @ 3'-1" = 9'-3"	3 SPA. @ 3'-4" = 10'-0"	3 SPA. @ 3'-4" = 10'-0"	2 SPA. @ 3'-4" = 6'-8"	1 SPA. @ 3'-4" AND 1 SPA. @ 2'-1 3/16"	1'-8"
G20	1'-8"	3 SPA. @ 3'-1 1/8" = 9'-3 7/16"	3 SPA. @ 3'-1" = 9'-3"	3 SPA. @ 3'-4" = 10'-0"	3 SPA. @ 3'-4" = 10'-0"	3 SPA. @ 3'-4" = 10'-0"	3'-1 9/16"	1'-8"
G21	1'-8"	3 SPA. @ 2'-9 1/16" = 8'-3 1/8"	3 SPA. @ 3'-1" = 9'-3"	3 SPA. @ 3'-4" = 10'-0"	3 SPA. @ 3'-4" = 10'-0"	3 SPA. @ 3'-4" = 10'-0"	2 SPA. @ 2'-0 15/16" = 4'-1 7/8"	1'-8"
G22	1'-8"	3 SPA. @ 2'-4 15/16" = 7'-2 13/16"	3 SPA. @ 3'-1" = 9'-3"	3 SPA. @ 3'-4" = 10'-0"	3 SPA. @ 3'-4" = 10'-0"	3 SPA. @ 3'-4" = 10'-0"	2 SPA. @ 2'-7 1/8" = 5'-2 3/16"	1'-8"
G23	1'-8"	2 SPA. @ 3'-1 1/4" = 6'-2 1/2"	3 SPA. @ 3'-1" = 9'-3"	3 SPA. @ 3'-4" = 10'-0"	3 SPA. @ 3'-4" = 10'-0"	3 SPA. @ 3'-4" = 10'-0"	2 SPA. @ 3'-1 1/4" = 6'-2 1/2"	1'-8"
G24	1'-8"	2 SPA. @ 2'-7 1/16" = 5'-2 1/8"	3 SPA. @ 3'-1" = 9'-3"	3 SPA. @ 3'-4" = 10'-0"	3 SPA. @ 3'-4" = 10'-0"	3 SPA. @ 3'-4" = 10'-0"	3 SPA. @ 2'-4 15/16" = 7'-2 7/8"	1'-8"
G25	1'-8"	2 SPA. @ 2'-0 15/16" = 4'-1 13/16"	3 SPA. @ 3'-1" = 9'-3"	3 SPA. @ 3'-4" = 10'-0"	3 SPA. @ 3'-4" = 10'-0"	3 SPA. @ 3'-4" = 10'-0"	3 SPA. @ 2'-9 1/16" = 8'-3 3/16"	1'-8"
G26	1'-8"	3'-1 1/2"	3 SPA. @ 3'-1" = 9'-3"	3 SPA. @ 3'-4" = 10'-0"	3 SPA. @ 3'-4" = 10'-0"	3 SPA. @ 3'-4" = 10'-0"	3 SPA. @ 3'-1 3/16" = 9'-3 1/2"	1'-8"
G27	1'-8"	2'-1 3/16"	3 SPA. @ 3'-1" = 9'-3"	3 SPA. @ 3'-4" = 10'-0"	3 SPA. @ 3'-4" = 10'-0"	3 SPA. @ 3'-4" = 10'-0"	4 SPA. @ 2'-6 15/16" = 10'-3 13/16"	1'-8"
G28	1'-8"	4 SPA. @ 2'-6 15/16" = 10'-3 13/16"	3 SPA. @ 3'-4" = 10'-0"	3 SPA. @ 3'-4" = 10'-0"	3 SPA. @ 3'-4" = 10'-0"	3 SPA. @ 3'-1" = 9'-3"	2'-1 3/16"	1'-8"
G29	1'-8"	3 SPA. @ 3'-1 3/16" = 9'-3 1/2"	3 SPA. @ 3'-4" = 10'-0"	3 SPA. @ 3'-4" = 10'-0"	3 SPA. @ 3'-4" = 10'-0"	3 SPA. @ 3'-1" = 9'-3"	3'-1 1/2"	1'-8"
G30	1'-8"	3 SPA. @ 2'-9 1/16" = 8'-3 3/16"	3 SPA. @ 3'-4" = 10'-0"	3 SPA. @ 3'-4" = 10'-0"	3 SPA. @ 3'-4" = 10'-0"	3 SPA. @ 3'-1" = 9'-3"	2 SPA. @ 2'-0 15/16" = 4'-1 13/16"	1'-8"
G31	1'-8"	3 SPA. @ 2'-4 15/16" = 7'-2 7/8"	3 SPA. @ 3'-4" = 10'-0"	3 SPA. @ 3'-4" = 10'-0"	3 SPA. @ 3'-4" = 10'-0"	3 SPA. @ 3'-1" = 9'-3"	2 SPA. @ 2'-7 1/16" = 5'-2 1/8"	1'-8"
G32	1'-8"	2 SPA. @ 3'-1 1/4" = 6'-2 1/2"	3 SPA. @ 3'-4" = 10'-0"	3 SPA. @ 3'-4" = 10'-0"	3 SPA. @ 3'-4" = 10'-0"	3 SPA. @ 3'-1" = 9'-3"	2 SPA. @ 3'-1 1/4" = 6'-2 1/2"	1'-8"
G33	1'-8"	2 SPA. @ 2'-7 1/8" = 5'-2 3/16"	3 SPA. @ 3'-4" = 10'-0"	3 SPA. @ 3'-4" = 10'-0"	3 SPA. @ 3'-4" = 10'-0"	3 SPA. @ 3'-1" = 9'-3"	3 SPA. @ 2'-4 15/16" = 7'-2 13/16"	1'-8"
G34	1'-8"	2 SPA. @ 2'-0 15/16" = 4'-1 7/8"	3 SPA. @ 3'-4" = 10'-0"	3 SPA. @ 3'-4" = 10'-0"	3 SPA. @ 3'-4" = 10'-0"	3 SPA. @ 3'-1" = 9'-3"	3 SPA. @ 2'-9 1/16" = 8'-3 1/8"	1'-8"
G35	1'-8"	3'-1 9/16"	3 SPA. @ 3'-4" = 10'-0"	3 SPA. @ 3'-4" = 10'-0"	3 SPA. @ 3'-4" = 10'-0"	3 SPA. @ 3'-1" = 9'-3"	3 SPA. @ 3'-1 1/8" = 9'-3 7/16"	1'-8"
G36	1'-8"	2'-1 3/16"	3 SPA. @ 3'-4" = 10'-0"	3 SPA. @ 3'-4" = 10'-0"	3 SPA. @ 3'-4" = 10'-0"	3 SPA. @ 3'-1" = 9'-3"	4 SPA. @ 2'-6 15/16" = 10'-3 13/16"	1'-8"

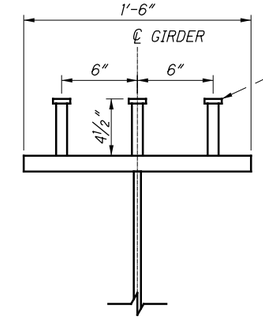

SHEAR STUD DETAIL

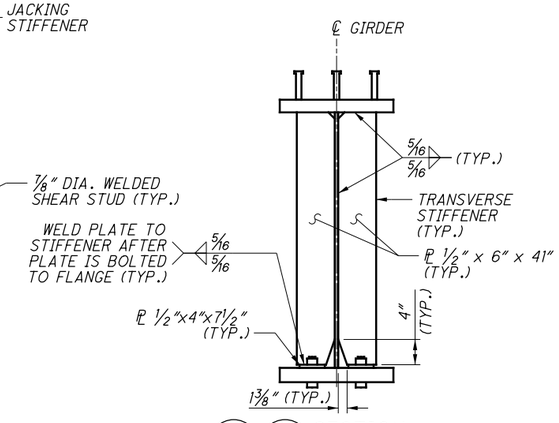

A/24 B/25 SECTION TRANSVERSE STIFFENER

NOTES:

1. ALL STEEL IS ASTM A709, GRADE 50 AND PAINTED, UNLESS NOTED OTHERWISE. PRIME COAT SHALL BE SHOP APPLIED. INTERMEDIATE COAT AND FINISH COAT SHALL BE FIELD APPLIED.

2. (CVN) DENOTES CHARPY V-NOTCH TEST IS REQUIRED. WHERE A SHAPE OR PLATE IS DESIGNATED (CVN), FURNISH MATERIAL THAT MEETS THE MINIMUM NOTCH TOUGHNESS REQUIREMENTS AS SPECIFIED IN AREMA TABLE 15-1-14.

3. (FCM) DENOTES FRACTURE CRITICAL MEMBER.

4. SECTION H.2.6.B.1 OF THE NORFOLK SOUTHERN PUBLIC PROJECTS MANUAL STATES, "IN ADDITION TO THOSE MEMBERS DESIGNATED AS FCM BY AREMA, ALL WELDED PLATE GIRDERS SHALL BE CONSIDERED FCM REGARDLESS OF ANY PROVIDED REDUNDANCY." THEREFORE, THESE MEMBERS ARE DESIGNATED AS FCM

5. SEE SHEETS 26 & 27 FOR BEARING STIFFENER, INTERMEDIATE DIAPHRAGM CONNECTION PLATE & DIAPHRAGM DETAILS.

6. HIGH STRENGTH BOLTS SHALL BE 1" DIAMETER, ASTM A325, MECHANICALLY GALVANIZED. HOT-DIPPED GALVANIZED BOLTS ARE NOT PERMITTED.

NO.	DATE	DESCRIPTION
1	2021-08-03	DC054
0	2019-02-25	RFC

ISSUE RECORD

DESIGN AGENCY
Michael Baker INTERNATIONAL
1111 SUPERIOR AVE E., SUITE 2300, CLEVELAND, OH 44114

DESIGNED	CHECKED	DRAWN	REVISED	REVIEWED	DATE	STRUCTURE FILE NUMBER
JCC	LPC	JCC		JWB	11/5/18	1801519

RECORD PLANS

GIRDER ELEVATION - SPAN 2

CUY-010-2039

NORFOLK SOUTHERN RAILROAD OVER OH-10

RECORD PLANS

CUY-IR490/SR010-2.09/19.28

PID No. 96833

RECORD PLANS

BU-22 - NORFOLK SOUTHERN BRIDGE OVER OH-10
...\Sheets\010_2039c_SS603.dgn 8/9/2021 2:49:03 PM lciborek

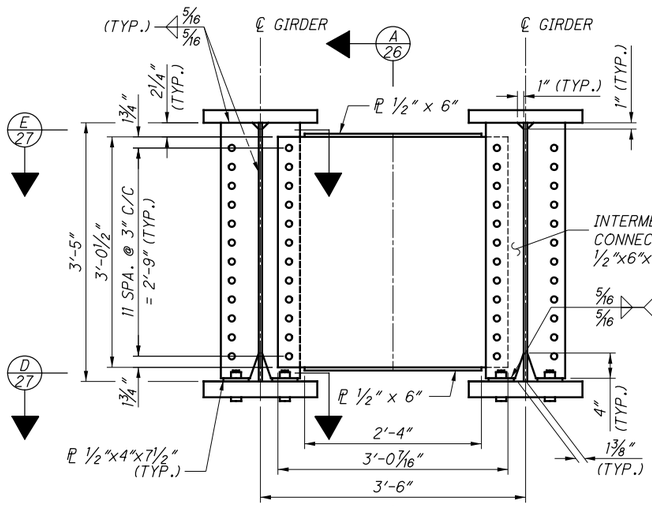

INTERMEDIATE DIAPHRAGM DETAILS

(SEE NOTE 4 REGARDING HOLES FOR DIAPHRAGMS BETWEEN G11/G12 & G29/G30)

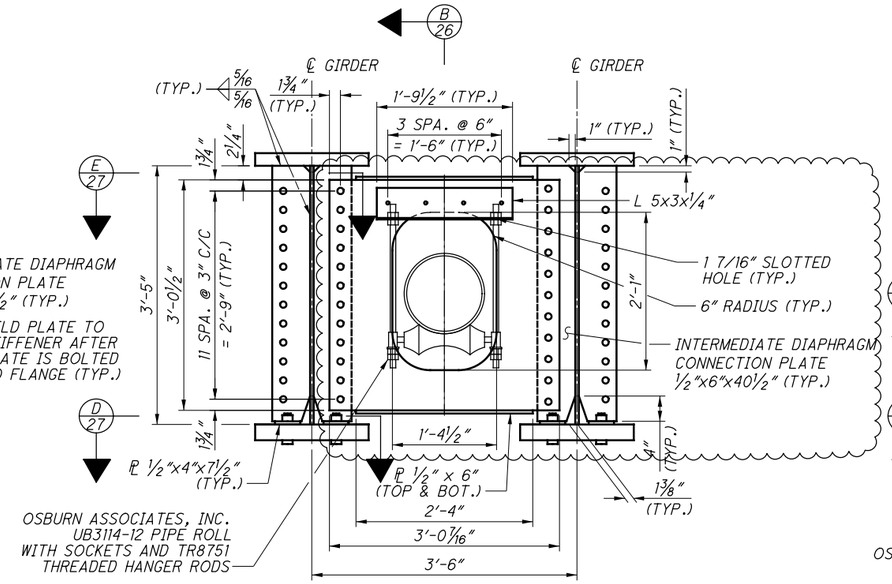

INTERMEDIATE DIAPHRAGM WITH HOLE DETAILS

(UTILITY CONNECTIONS REQUIRED ONLY BETWEEN G1/G2, G2/G3, G3/G4, G9/G10, G17/G18 PLUS SIMILAR BAYS IN SPAN 2)

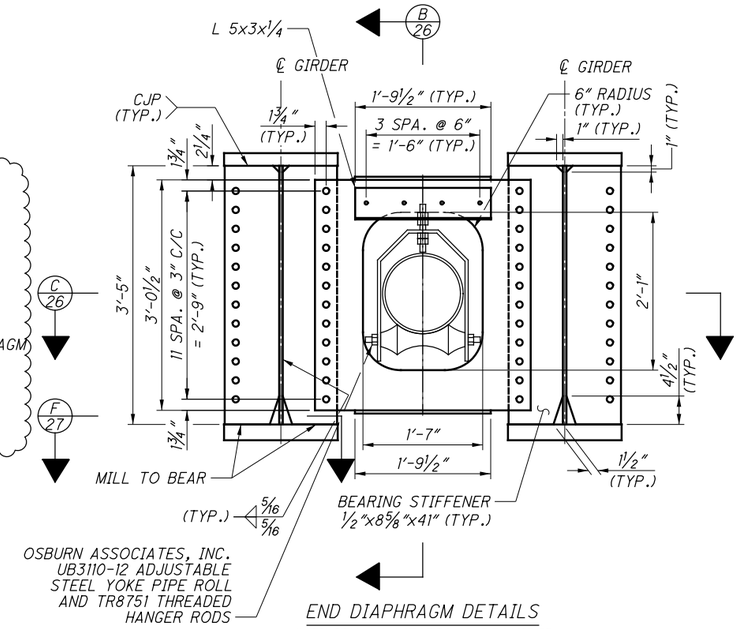

END DIAPHRAGM DETAILS

(UTILITY CONNECTIONS REQUIRED ONLY BETWEEN G1/G2, G2/G3, G3/G4, G9/G10, G17/G18 PLUS SIMILAR BAYS IN SPAN 2)

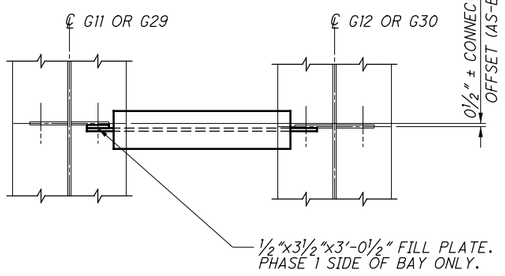

INTERMEDIATE DIAPHRAGM DETAILS AT PHASE LINE

PLACE END DIAPHRAGMS THIS BAY IN SIMILAR FASHION.

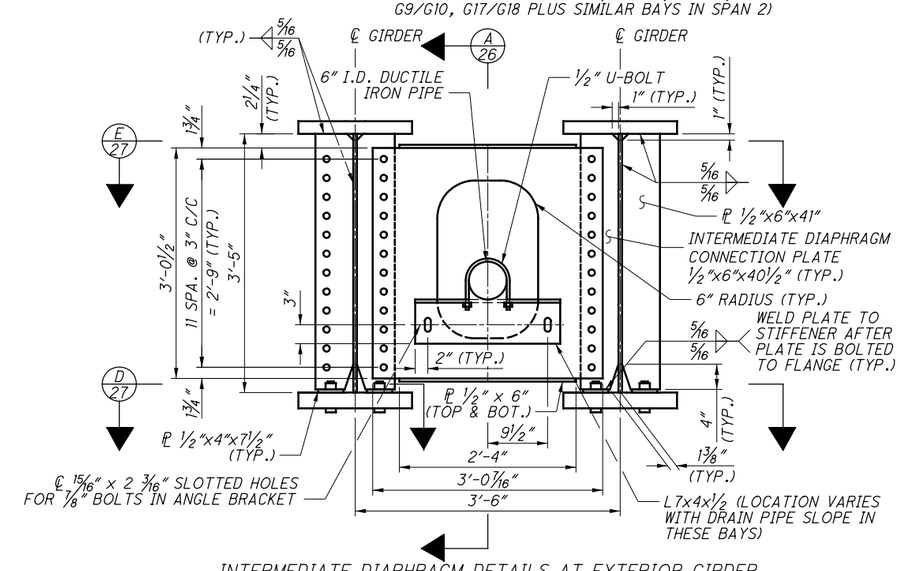

INTERMEDIATE DIAPHRAGM DETAILS AT EXTERIOR GIRDER

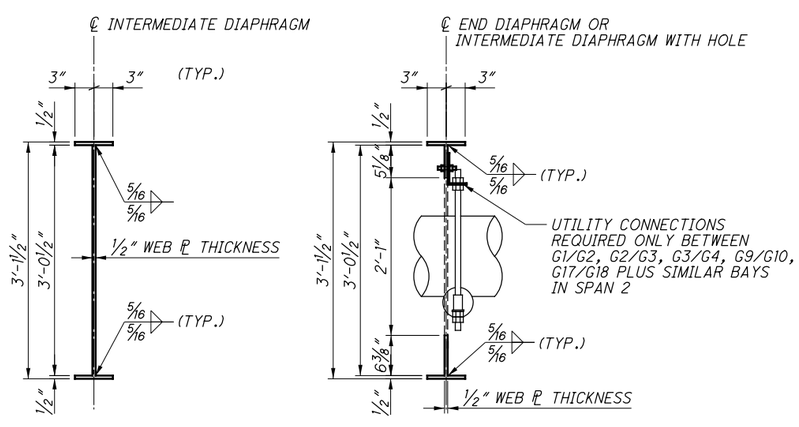

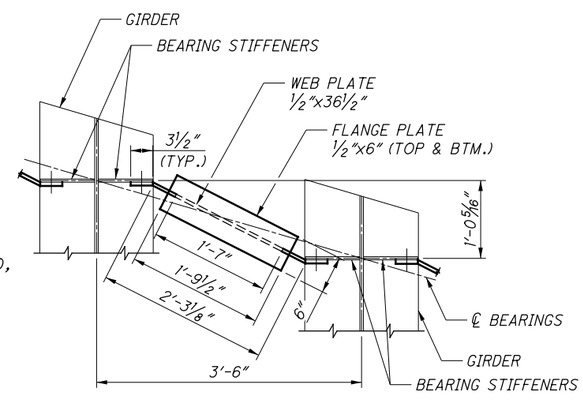

NOTES:

1. ALL STEEL IS ASTM A709, GRADE 50 AND PAINTED, UNLESS NOTED OTHERWISE. PRIME COAT SHALL BE SHOP APPLIED. INTERMEDIATE COAT AND FINISH COAT SHALL BE FIELD APPLIED.

2. HIGH STRENGTH BOLTS SHALL BE 1" DIAMETER, ASTM A325, MECHANICALLY GALVANIZED. HOT-DIPPED GALVANIZED BOLTS ARE NOT PERMITTED.

3. SEE SHEET 41 FOR DECK DRAIN SUPPORT DETAILS AT DIAPHRAGMS.

4. DIAPHRAGM HOLES ON THE PHASE 2 SIDE BETWEEN GIRDERS G11 AND G12, AND G29 AND G30 SHALL BE SLOTTED HOLES 1 1/16" x 1⅝", A PLATE WASHER OF ⅝" THICKNESS AND STANDARD HOLES SHALL BE PROVIDED IN ACCORDANCE WITH AREMA CH.15-3.2.5

NO.	DATE	DESCRIPTION
2	2024-09-10	RECORD DRAWINGS
1	2021-08-03	DC054
0	2019-02-25	RFC

ISSUE RECORD

DESIGN AGENCY
Michael Baker INTERNATIONAL
1111 SUPERIOR AVE E., SUITE 2300, CLEVELAND, OH 44114

DESIGNED	DRAWN	REVIEWED	DATE
JCC	JCC	JWB	11/5/18
CHECKED	REVISED	STRUCTURE FILE NUMBER	
LPC	—	1801519	

RECORD PLANS

DIAPHRAGM DETAILS (1 OF 2)
CUY-010-2039
NORFOLK SOUTHERN RAILROAD OVER OH-10

RECORD PLANS

CUY-IR490/SR010-2.09/19.28
PID No. 96833

RECORD PLANS

26/45

28/47

BU-22 - NORFOLK SOUTHERN BRIDGE OVER OH-10
...\Sheets\010_2039C_SS605.dgn 11/25/2024 9:46:38 AM Rohit.Bk

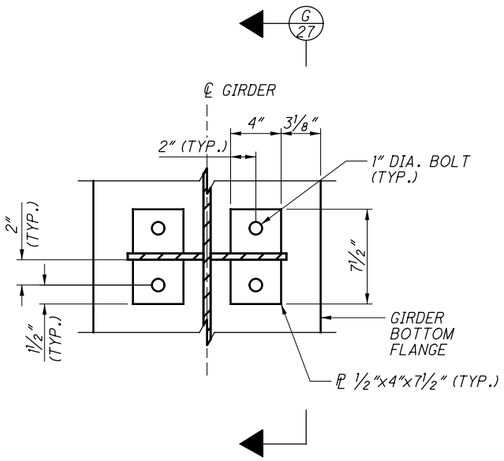

D 26 SECTION

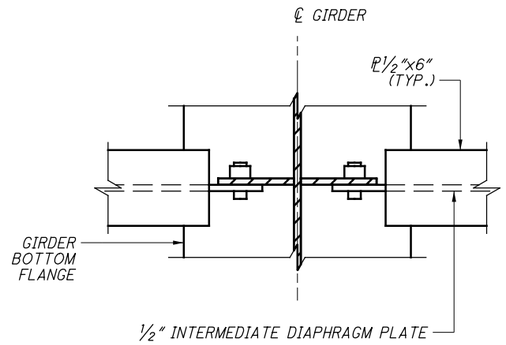

E 26 SECTION

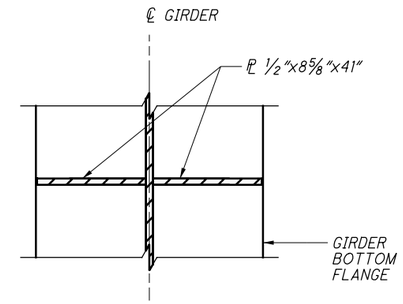

F 26 SECTION

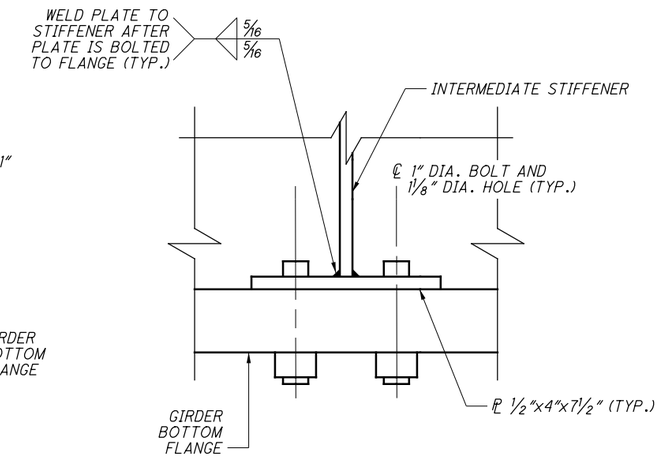

G 27 VIEW

DEFLECTION TABLE - SPAN 1										
GIRDER	DELFECTION DUE TO:	℄ FIXED BRG. (R.A.)	1/8 SPAN	1/4 SPAN	3/8 SPAN	1/2 SPAN	5/8 SPAN	3/4 SPAN	7/8 SPAN	℄ EXPANSION BRG. (PIER, SPAN 1)
EXTERIOR GIRDERS	STEEL WEIGHT	0	1/16	1/8	3/16	3/16	3/16	1/8	1/16	0
	DECK WEIGHT	0	1/16	3/16	3/16	1/4	3/16	3/16	1/16	0
	PARAPET, BALLAST AND FUTURE BALLAST	0	1/16	1/8	3/16	3/16	3/16	1/8	1/16	0
	TOTAL	0	3/16	7/16	9/16	5/8	9/16	7/16	3/16	0
INTERIOR GIRDERS	STEEL WEIGHT	0	1/16	1/8	3/16	3/16	3/16	1/8	1/16	0
	DECK WEIGHT	0	1/16	1/8	3/16	3/16	3/16	1/8	1/16	0
	PARAPET, BALLAST AND FUTURE BALLAST	0	1/16	1/8	3/16	3/16	3/16	1/8	1/16	0
	TOTAL	0	3/16	3/8	9/16	9/16	9/16	3/8	3/16	0

DEFLECTION TABLE - SPAN 2										
GIRDER	DELFECTION DUE TO:	℄ FIXED BRG. (F.A.)	7/8 SPAN	3/4 SPAN	5/8 SPAN	1/2 SPAN	3/8 SPAN	1/4 SPAN	1/8 SPAN	℄ EXPANSION BRG. (PIER, SPAN 2)
EXTERIOR GIRDERS	STEEL WEIGHT	0	1/16	1/16	1/16	1/16	1/16	1/16	1/16	0
	DECK WEIGHT	0	1/16	1/8	1/8	1/8	1/8	1/8	1/16	0
	PARAPET, BALLAST AND FUTURE BALLAST	0	1/16	1/16	1/8	1/8	1/8	1/16	1/16	0
	TOTAL	0	3/16	1/4	5/16	5/16	5/16	1/4	3/16	0
INTERIOR GIRDERS	STEEL WEIGHT	0	1/16	1/16	1/16	1/16	1/16	1/16	1/16	0
	DECK WEIGHT	0	1/16	1/16	1/8	1/8	1/8	1/16	1/16	0
	PARAPET, BALLAST AND FUTURE BALLAST	0	1/16	1/16	1/8	1/8	1/8	1/16	1/16	0
	TOTAL	0	3/16	3/16	5/16	5/16	5/16	3/16	3/16	0

NOTES:

1. ALL STEEL IS ASTM A709, GRADE 50 AND PAINTED, UNLESS NOTED OTHERWISE. PRIME COAT SHALL BE SHOP APPLIED. INTERMEDIATE COAT AND FINISH COAT SHALL BE FIELD APPLIED.

2. HIGH STRENGTH BOLTS SHALL BE 1" DIAMETER, ASTM A325, MECHANICALLY GALVANIZED. HOT-DIPPED GALVANIZED BOLTS ARE NOT PERMITTED.

NO.	DATE	DESCRIPTION
0	2/25/19	RFC

ISSUE RECORD

DESIGN AGENCY
Michael Baker INTERNATIONAL
1111 SUPERIOR AVE E., SUITE 2300, CLEVELAND, OH 44114

DESIGNED	DRAWN	REVIEWED	DATE
JCC	JCC	JWB	11/5/18
CHECKED	REVISED	STRUCTURE FILE NUMBER	
LPC	—	1801519	

RECORD PLANS

DIAPHRAGM DETAILS (2 OF 2)
CUY-010-2039
NORFOLK SOUTHERN RAILROAD OVER OH-10

CUY-IR490/SR010-2.09/19.28
PID No. 96833

RECORD PLANS

RFC SUBMITTAL
BU-22 - NORFOLK SOUTHERN BRIDGE OVER OH-10
...\Sheets\010_2039C_SS606.dgn 3/18/2019 1:42:09 PM ccummings

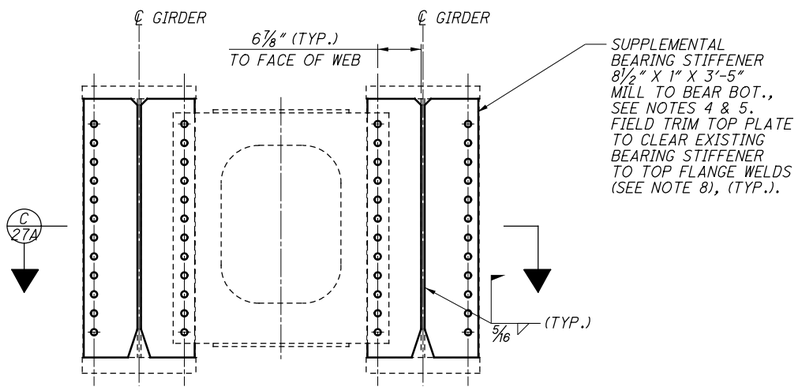

SPAN 2 BEARING STIFFENER RETROFIT

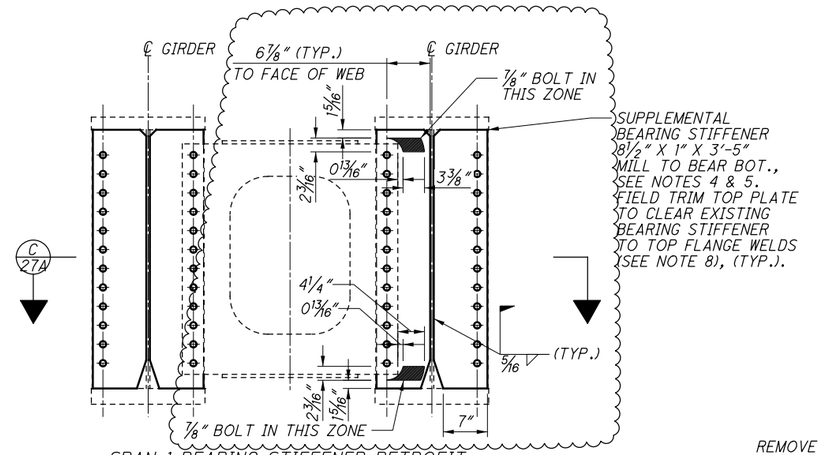

SPAN 1 BEARING STIFFENER RETROFIT

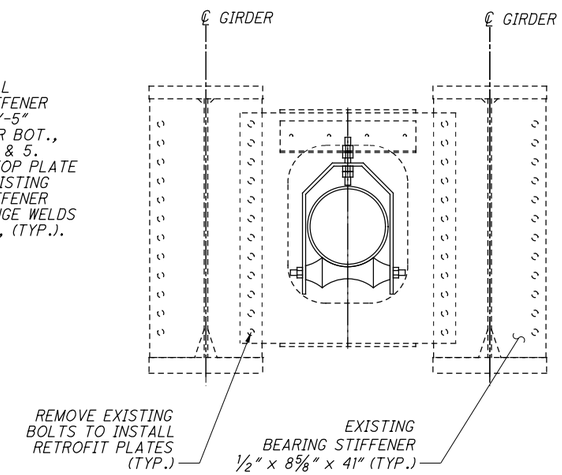

EXISTING END DIAPHRAGM DETAILS

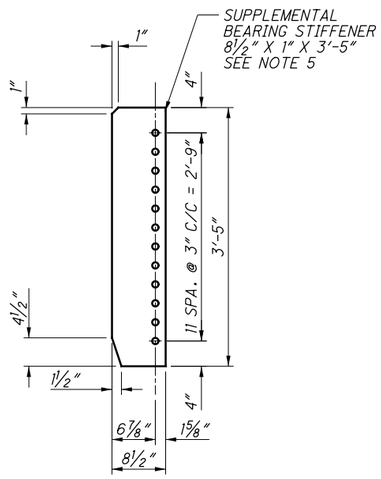

SPAN 2 BEARING STIFFENER RETROFIT PLATES

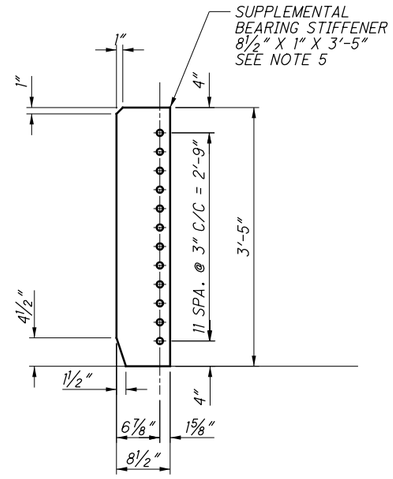

SPAN 1 BEARING STIFFENER RETROFIT PLATES

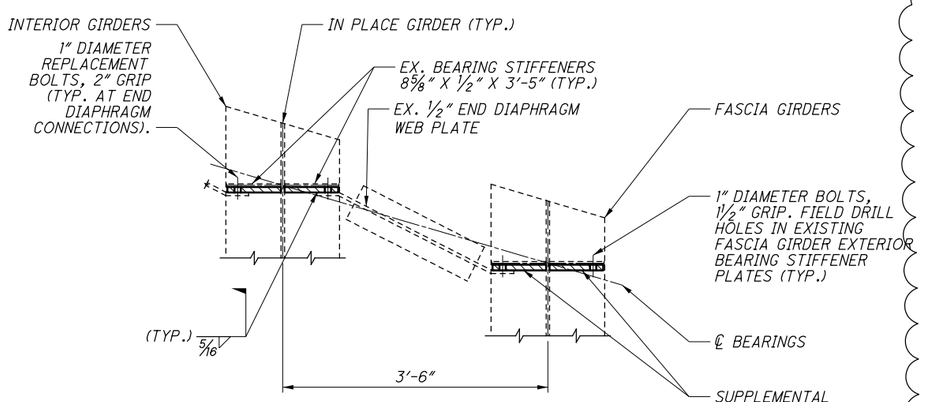

C 27A SECTION

LOCATION	AS-BUILT "C" **
G36-G18	2 3/4"
G35-G17	2 1/4"
G34-G16	2 1/4"
G33-G15	2 3/8"
G32-G14	2 1/4"
G31-G13	2 1/2"
G30-G12	3"
G29-G11	2 1/4"
G28-G10	2 3/4"
G27-G9	3"
G26-G8	2 1/8"
G25-G7	3"
G24-G6	2 3/8"
G23-G5	2 7/8"
G22-G4	2 3/4"
G21-G3	2 3/4"
G20-G2	2 3/4"
G19-G1	2 3/4"

** "C" DIMENSION MEASURED DECEMBER 1, 2023, TEMPERATURE = 46° F

SUPPLEMENTAL PIER GAP INFORMATION

Temperature (°F)	Required Pier Gap "C" Pre-Excavation Before Translation (IN)	Anticipated Translation at Pier due to Abutment Deflection (IN)	Pier Gap "C" Post-Excavation including Abutment Deflection (IN)	Anticipated Translation at Pier due to LL Surcharge and Rotation (IN)	Post-Excavation Pier Gap "C" including Total Translation (IN)
120	2	½	1 ½	1 ¼	¼
115	2 1/16	½	1 9/16	1 ¼	5/16
110	2 ⅛	½	1 ⅝	1 ¼	⅜
105	2 ⅛	½	1 11/16	1 ¼	⅜
100	2 3/16	½	1 ¾	1 ¼	7/16
95	2 ¼	½	1 ¾	1 ¼	½
90	2 5/16	½	1 13/16	1 ¼	9/16
85	2 ⅜	½	1 ⅞	1 ¼	9/16
80	2 ⅜	½	1 15/16	1 ¼	⅝
75	2 7/16	½	2	1 ¼	11/16
70	2 ½	½	2	1 ¼	¾
65	2 9/16	½	2 1/16	1 ¼	13/16
60	2 ⅝	½	2 ⅛	1 ¼	13/16
55	2 ⅝	½	2 3/16	1 ¼	⅞
50	2 11/16	½	2 3/16	1 ¼	15/16
45	2 ¾	½	2 ¼	1 ¼	1
40	2 13/16	½	2 5/16	1 ¼	1 1/16
35	2 13/16	½	2 ⅜	1 ¼	1 1/16
30	2 ⅞	½	2 7/16	1 ¼	1 ⅛
25	2 15/16	½	2 7/16	1 ¼	1 3/16
20	3	½	2 ½	1 ¼	1 ¼
15	3 1/16	½	2 9/16	1 ¼	1 ¼
10	3 1/16	½	2 ⅝	1 ¼	1 5/16
5	3 ⅛	½	2 ⅝	1 ¼	1 ⅜
0	3 3/16	½	2 11/16	1 ¼	1 7/16
-5	3 ¼	½	2 ¾	1 ¼	1 ½
-10	3 ¼	½	2 13/16	1 ¼	1 ½
-15	3 5/16	½	2 ⅞	1 ¼	1 9/16
-20	3 ⅜	½	2 ⅞	1 ¼	1 ⅝
-25	3 7/16	½	2 15/16	1 ¼	1 11/16
-30	3 ½	½	3	1 ¼	1 11/16

SEE SHEET34 FOR LOCATION OF DIMENSION "C"

NOTES:

1. RETROFIT IS REQUIRED AT ALL EXISTING BEARING STIFFENER LOCATIONS.

2. FIELD TOUCH UP ANY GROUND OR DAMAGED SURFACE WITH PRIMER PAINT.

3. FIELD VERIFY ALL DIMENSIONS PRIOR TO DRILLING HOLES FOR RETROFIT PLATES.

4. SUPPLEMENTAL BEARING STIFFENER TO BE INSTALLED BETWEEN EXISTING BEARING STIFFENER AND DIAPHRAGM CONNECTION PLATES.

5. FIELD BEVEL EDGES OF SUPPLEMENTAL BEARING STIFFENER AS NEEDED ADJACENT TO GIRDER WEB TO CLEAR WELD FOR EXISTING BEARING STIFFENER. SEE NOTE 8.

6. ALL STEEL IS ASTM A709, GRADE 50 PAINTED, UNLESS NOTED OTHERWISE. PRIME COAT SHALL BE SHOP APPLIED. INTERMEDIATE COAT AND FINISH COAT SHALL BE FIELD APPLIED.

7. HIGH STRENGTH BOLTS SHALL BE 1" DIAMETER, ASTM A325, MECHANICALLY GALVANIZED. HOT-DIPPED GALVANIZED BOLTS ARE NOT PERMITTED.

8. FIELD TRIM TOP EDGE OF SUPPLEMENTAL BEARING STIFFENER PLATES TO CLEAR EXISTING VARIABLY SIZED BEARING STIFFENER TO TOP FLANGE WELDS.

NO.	DATE	DESCRIPTION
1	2024-09-10	RECORD DRAWINGS
0	2021-08-03	DC054

ISSUE RECORD

DESIGN AGENCY
Michael Baker INTERNATIONAL
1111 SUPERIOR AVE E., SUITE 2300, CLEVELAND, OH 44114

DESIGNED	DRAWN	REVIEWED	DATE
ETB	JCC	LPC	05/26/21
CHECKED	REVISED	STRUCTURE FILE NUMBER	
LJH		1801519	

RECORD PLANS

BEARING STIFFENER RETROFIT DETAILS (REVISED, 1 OF 1)
CUY-010-2039
NORFOLK SOUTHERN RAILROAD OVER OH-10

RECORD PLANS

CUY-IR490/SR010-2.09/19.28
PID No. 96833

RECORD PLANS

27A / 45

29A / 47

BU-22 - NORFOLK SOUTHERN BRIDGE OVER OH-10
...\Sheets\010_2039C_SS608.dgn 11/25/2024 9:50:48 AM Rohit.Bk

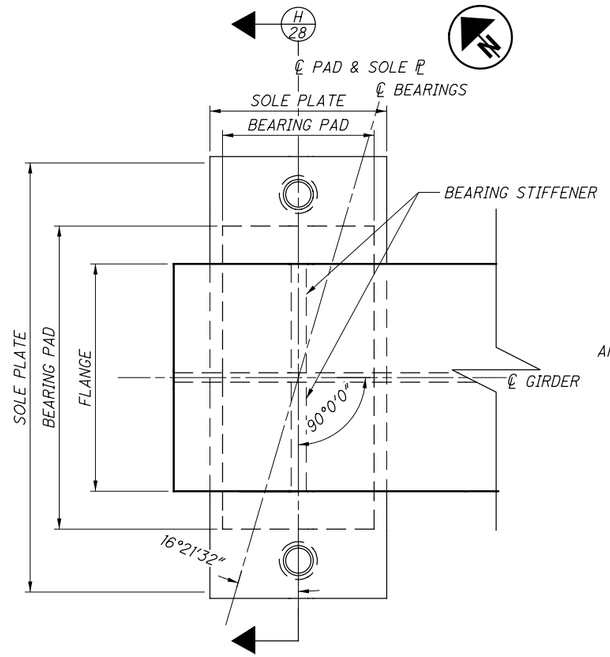

PLAN

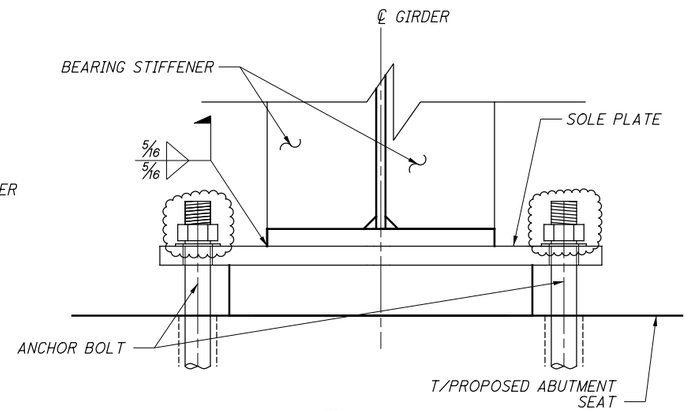

H 28 SECTION

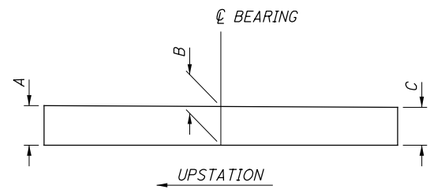

J 28 SECTION

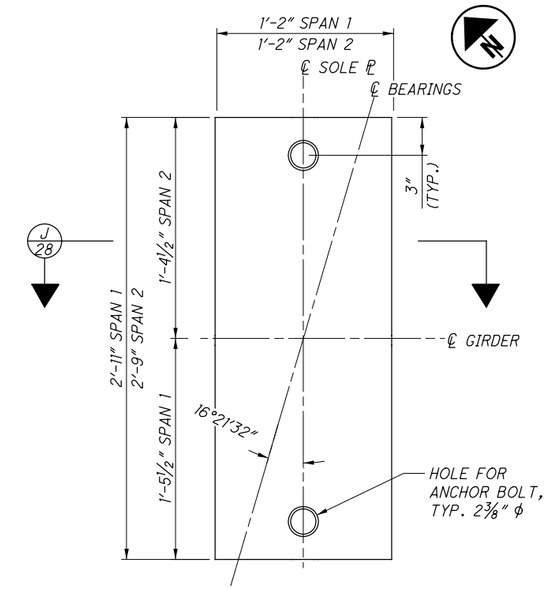

SOLE PLATE PLAN

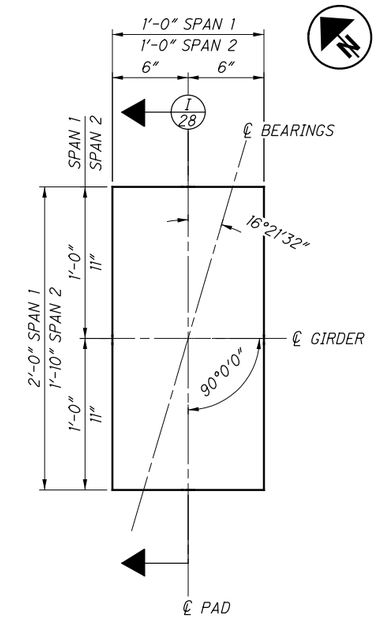

BEARING PAD PLAN

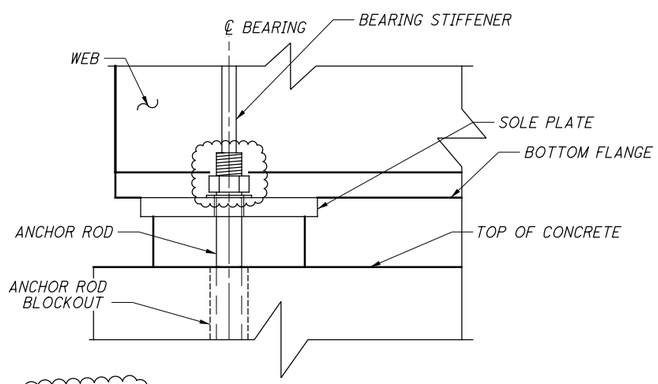

ELEVATION

RA SOLE PLATE THICKNESSES			
GIRDER #	A (IN)	B (IN)	C (IN)
G1 & G2	1 27/32"	1 25/32"	1 23/32"
G3 & G4	1 13/16"	1 3/4"	1 11/16"
G5 & G6	1 25/32"	1 23/32"	1 21/32"
G7 & G8	1 3/4"	1 11/16"	1 5/8"
G9 & G10	1 23/32"	1 21/32"	1 19/32"
G11 & G12	1 11/16"	1 5/8"	1 9/16"
G13 & G14	1 21/32"	1 19/32"	1 17/32"
G15 & G16	1 5/8"	1 9/16"	1 1/2"
G17 & G18	1 5/8"	1 9/16"	1 1/2"

FA SOLE PLATE THICKNESSES			
GIRDER #	A (IN)	B (IN)	C (IN)
G19 & G20	1 25/32"	1 25/32"	1 25/32"
G21 & G22	1 3/4"	1 3/4"	1 3/4"
G23 & G24	1 23/32"	1 23/32"	1 23/32"
G25 & G26	1 11/16"	1 11/16"	1 11/16"
G27 & G28	1 21/32"	1 21/32"	1 21/32"
G29 & G30	1 5/8"	1 5/8"	1 5/8"
G31 & G32	1 19/32"	1 19/32"	1 19/32"
G33 & G34	1 9/16"	1 9/16"	1 9/16"
G35 & G36	1 17/32"	1 17/32"	1 17/32"

LOAD TABLE		
LOAD	RA	FA
DEAD LOAD (KIPS)	236.12	194.59
LIVE LOAD (KIPS)	156.21	133.19
SERVICE VERTICAL LOAD (KIPS)	392.33	327.78

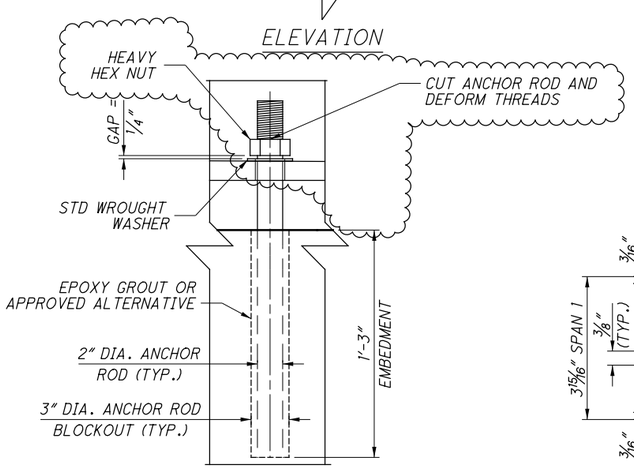

FIXED BEARING ANCHOR ROD DETAIL

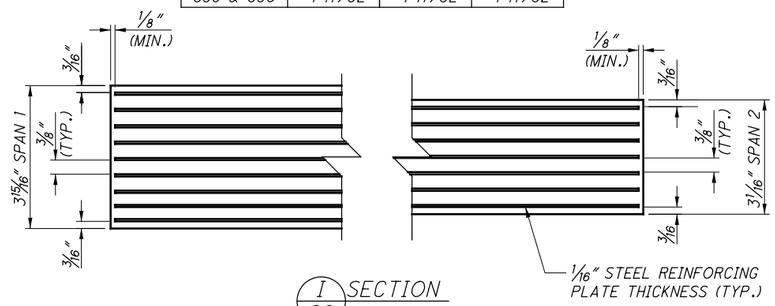

I 28 SECTION

NOTES:

1. THE FABRICATION AND INSTALLATION OF ELASTOMERIC BRIDGE BEARINGS SHALL BE IN ACCORDANCE WITH THE REQUIREMENTS OF AREMA 15-5.12. THE BEARINGS WERE DESIGNED IN ACCORDANCE WITH AREMA 15-5.6.

2. THE MATERIALS FOR ELASTOMERIC BEARINGS SHALL CONFORM TO THE REQUIREMENTS OF AREMA 15-5.6. THE ELASTOMERIC COMPOUND SHALL BE A 60 DUROMETER VIRGIN CRYSTALLIZATION-RESISTANT POLYCHLOROPRENE (NEOPRENE). STEEL REINFORCEMENT SHALL BE MILD STEEL CONFORMING TO ASTM A1011.

3. THE STEEL SOLE PLATE SHALL BE ASTM A36 STEEL. ANCHOR RODS SHALL BE ASTM F1554, GRADE 105. NUTS SHALL CONFORM TO ASTM A563 FOR APPROPRIATE GRADE AND SIZE OF ANCHOR BOLT. WASHERS SHALL CONFORM TO ASTM F436.

4. THE STEEL SOLE PLATE SHALL BE PAINTED PER CMS 514.

5. THE STEEL SOLE PLATE SHALL BE BONDED BY VULCANIZATION TO THE ELASTOMER DURING THE MOLDING PROCESS. CONTROL WELDING OF THE LOAD PLATE TO THE SUPERSTRUCTURE SO THAT THE PLATE TEMPERATURE AT THE ELASTOMER BONDED SURFACE DOES NOT EXCEED 300°F AS DETERMINED BY THE USE OF PYROMETRIC STICKS OR OTHER TEMPERATURE MONITORING DEVICES.

6. EACH BEARING ASSEMBLY SHALL BE SHOP MARKED WITH THE FOLLOWING INFORMATION: TOP, FORWARD STATION DIRECTION, LOCATION (FA OR RA) AND BEAM NUMBER. ALL BEARINGS SHALL BE MARKED PRIOR TO SHIPPING. THE MARKS SHALL INCLUDE THE BEARING LOCATION ON THE BRIDGE, AND A DIRECTION ARROW THAT POINTS UP-STATION. ALL MARKS SHALL BE PERMANENT AND BE VISIBLE AFTER THE BEARING IS INSTALLED.

7. THE ACCEPTANCE CRITERIA FOR ALL BEARINGS SHALL MEET THE REQUIREMENTS OF TEST CRITERIA I AS SPECIFIED IN AREMA 15-5.12.9.

NO.	DATE	DESCRIPTION
3	2024-09-10	RECORD DRAWINGS
2	2019-10-21	DC023
1	2019-07-09	DC010, DRFI007, DRFI008
0	2019-02-25	RFC

ISSUE RECORD

DESIGN AGENCY
Michael Baker INTERNATIONAL
1111 SUPERIOR AVE E., SUITE 2300, CLEVELAND, OH 44114

DESIGNED	DRAWN	REVIEWED	DATE
JCC	JCC	JWB	11/5/18
CHECKED	REVISED	STRUCTURE FILE NUMBER	
ETB		1801519	

RECORD PLANS

FIXED BEARING DETAILS
CUY-010-2039
NORFOLK SOUTHERN RAILROAD OVER OH-10

RECORD PLANS

CUY-IR490/SR010-2.09/19.28
PID No. 96833

RECORD PLANS

BU-22 - NORFOLK SOUTHERN BRIDGE OVER OH-10
...\Sheets\010_2039C_SB601.dgn 12/11/2024 9:22:03 AM Rohit.Bk

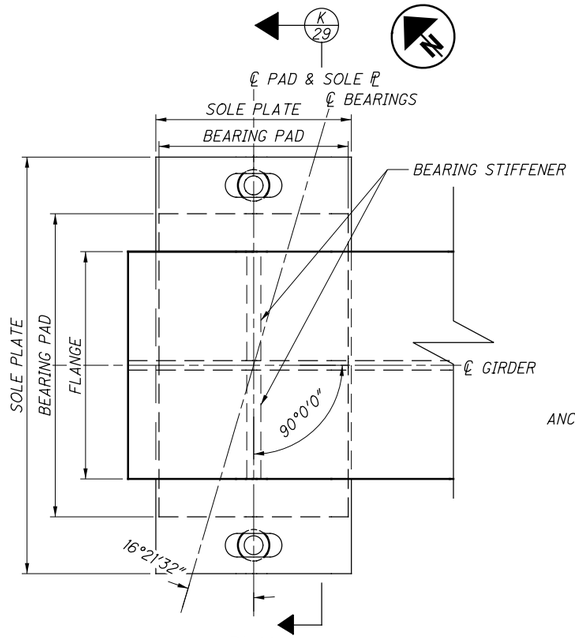

PLAN

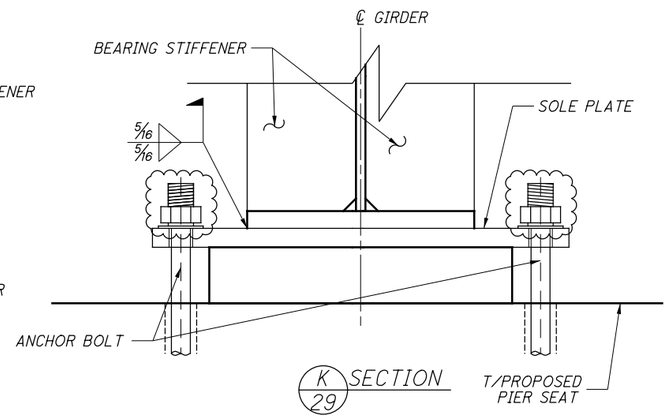

K 29 SECTION

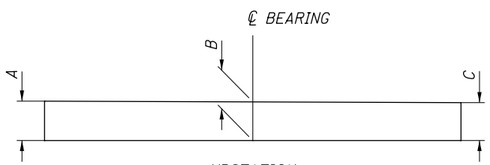

M 29 SECTION

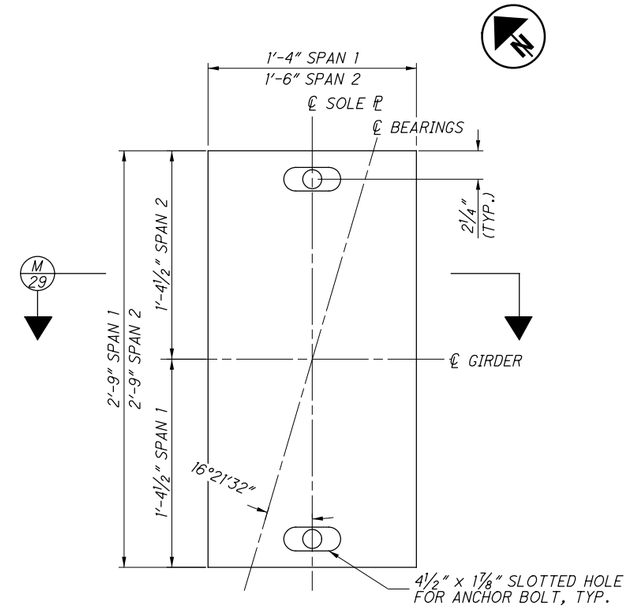

SOLE PLATE PLAN

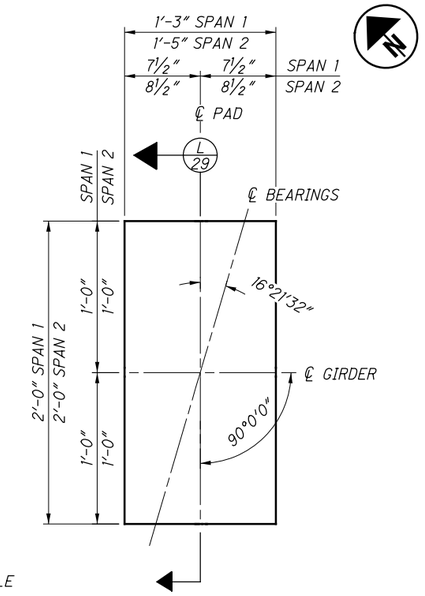

BEARING PAD PLAN

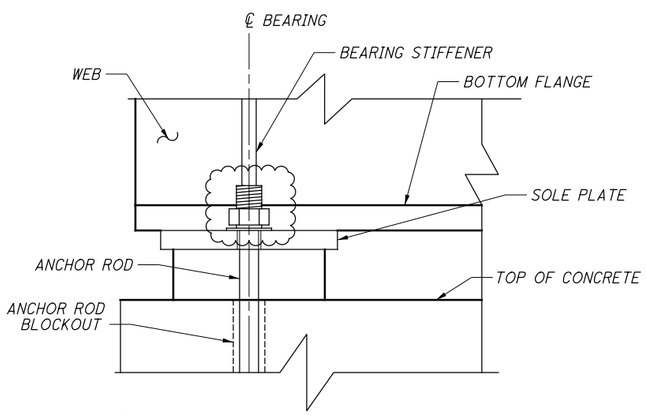

ELEVATION

PIER SPAN 1 PLATE THICKNESSES			
GIRDER #	A (IN)	B (IN)	C (IN)
G1 & G2	1 25/32"	1 25/32"	1 25/32"
G3 & G4	1 3/4"	1 3/4"	1 3/4"
G5 & G6	1 23/32"	1 23/32"	1 23/32"
G7 & G8	1 11/16"	1 11/16"	1 11/16"
G9 & G10	1 21/32"	1 21/32"	1 21/32"
G11 & G12	1 5/8"	1 5/8"	1 5/8"
G13 & G14	1 19/32"	1 19/32"	1 19/32"
G15 & G16	1 9/16"	1 9/16"	1 9/16"
G17 & G18	1 17/32"	1 17/32"	1 17/32"

PIER SPAN 2 PLATE THICKNESSES			
GIRDER #	A (IN)	B (IN)	C (IN)
G19 & G20	2 15/32"	2 13/32"	2 11/32"
G21 & G22	2 7/16"	2 3/8"	2 5/16"
G23 & G24	2 13/32"	2 11/32"	2 9/32"
G25 & G26	2 3/8"	2 5/16"	2 1/4"
G27 & G28	2 11/32"	2 9/32"	2 7/32"
G29 & G30	2 5/16"	2 1/4"	2 3/16"
G31 & G32	2 9/32"	2 7/32"	2 5/32"
G33 & G34	2 1/4"	2 3/16"	2 1/8"
G35 & G36	2 7/32"	2 5/32"	2 3/32"

LOAD TABLE		
LOAD	SPAN 1 PIER	SPAN 2 PIER
DEAD LOAD (KIPS)	236.12	194.59
LIVE LOAD (KIPS)	156.21	133.19
SERVICE VERTICAL LOAD (KIPS)	392.33	327.78

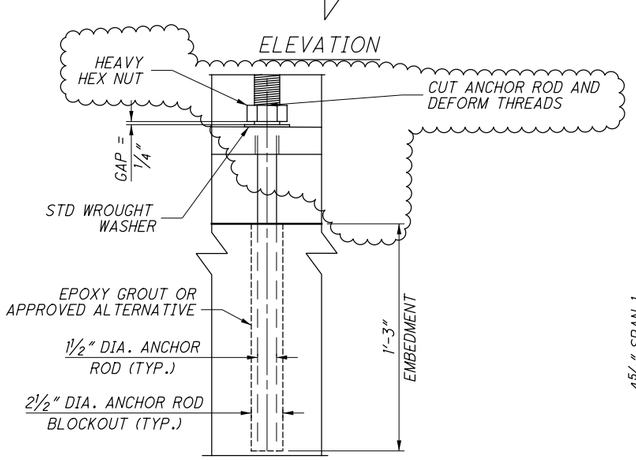

EXPANSION BEARING ANCHOR ROD DETAIL

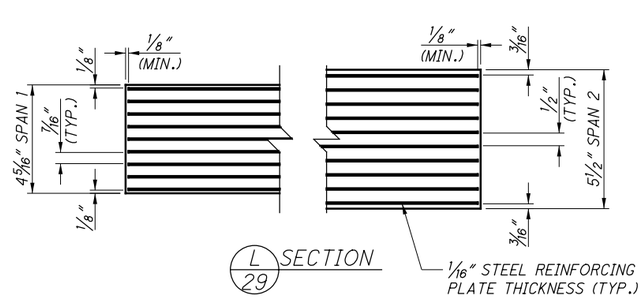

L 29 SECTION

NOTES:

1. THE FABRICATION AND INSTALLATION OF ELASTOMERIC BRIDGE BEARINGS SHALL BE IN ACCORDANCE WITH THE REQUIREMENTS OF AREMA 15-5.12. THE BEARINGS WERE DESIGNED IN ACCORDANCE WITH AREMA 15-5.6.

2. THE MATERIALS FOR ELASTOMERIC BEARINGS SHALL CONFORM TO THE REQUIREMENTS OF AREMA 15-5.6. THE ELASTOMERIC COMPOUND SHALL BE A 60 DUROMETER VIRGIN CRYSTALLIZATION-RESISTANT POLYCHLOROPRENE (NEOPRENE). STEEL REINFORCEMENT SHALL BE MILD STEEL CONFORMING TO ASTM A1011.

3. THE STEEL SOLE PLATE SHALL BE ASTM A36 STEEL. ANCHOR RODS SHALL BE ASTM F1554, GRADE 105. NUTS SHALL CONFORM TO ASTM A563 FOR APPROPRIATE GRADE AND SIZE OF ANCHOR BOLT. WASHERS SHALL CONFORM TO ASTM F436.

4. THE STEEL SOLE PLATE SHALL BE PAINTED PER CMS 514.

5. THE STEEL SOLE PLATE SHALL BE BONDED BY VULCANIZATION TO THE ELASTOMER DURING THE MOLDING PROCESS. CONTROL WELDING OF THE LOAD PLATE TO THE SUPERSTRUCTURE SO THAT THE PLATE TEMPERATURE AT THE ELASTOMER BONDED SURFACE DOES NOT EXCEED 300°F AS DETERMINED BY THE USE OF PYROMETRIC STICKS OR OTHER TEMPERATURE MONITORING DEVICES.

6. EACH BEARING ASSEMBLY SHALL BE SHOP MARKED WITH THE FOLLOWING INFORMATION: TOP, FORWARD STATION DIRECTION, LOCATION (SPAN 1 PIER OR SPAN 2 PIER) AND BEAM NUMBER. ALL BEARINGS SHALL BE MARKED PRIOR TO SHIPPING. THE MARKS SHALL INCLUDE THE BEARING LOCATION ON THE BRIDGE, AND A DIRECTION ARROW THAT POINTS UP-STATION. ALL MARKS SHALL BE PERMANENT AND BE VISIBLE AFTER THE BEARING IS INSTALLED.

7. THE ACCEPTANCE CRITERIA FOR ALL BEARINGS SHALL MEET THE REQUIREMENTS OF TEST CRITERIA I AS SPECIFIED IN AREMA 15-5.12.9.

NO.	DATE	DESCRIPTION
2	2024-09-10	RECORD DRAWINGS
1	2019-07-09	DC010, DRFI007, DRFI008
0	2019-02-25	RFC

ISSUE RECORD

DESIGN AGENCY
Michael Baker INTERNATIONAL
1111 SUPERIOR AVE E., SUITE 2300, CLEVELAND, OH 44114

DESIGNED	DRAWN	REVIEWED	DATE
JCC	JCC	JWB	11/5/18
CHECKED	REVISED	STRUCTURE FILE NUMBER	
ETB		1801519	

RECORD PLANS

EXPANSION BEARING DETAILS
CUY-010-2039
NORFOLK SOUTHERN RAILROAD OVER OH-10

RECORD PLANS

CUY-IR490/SR010-2.09/19.28
PID No. 96833

BU-22 - NORFOLK SOUTHERN BRIDGE OVER OH-10
...\Sheets\010_2039C_SB602.dgn 12/11/2024 10:36:23 AM Rohit.Bk

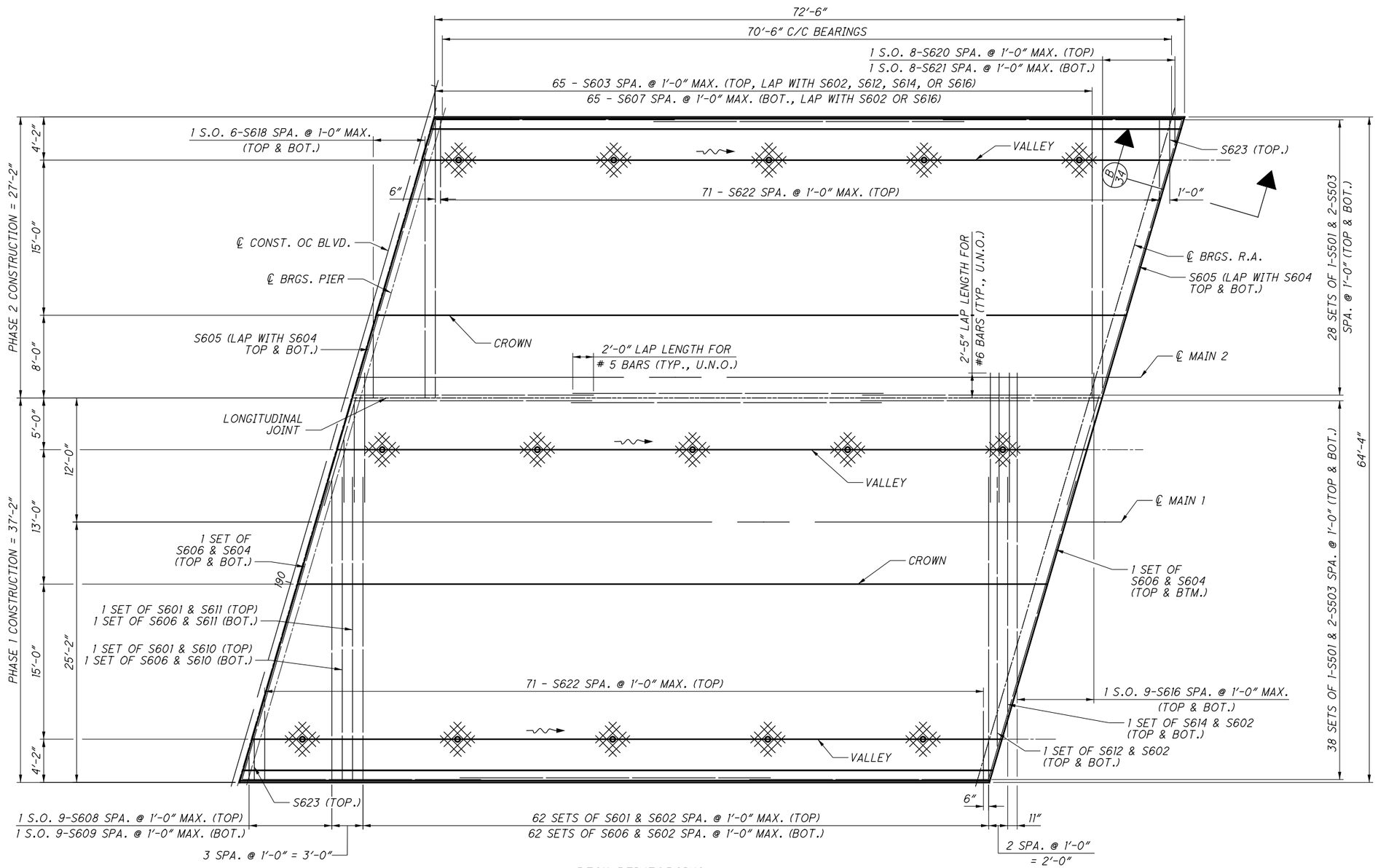

DECK REINFORCING

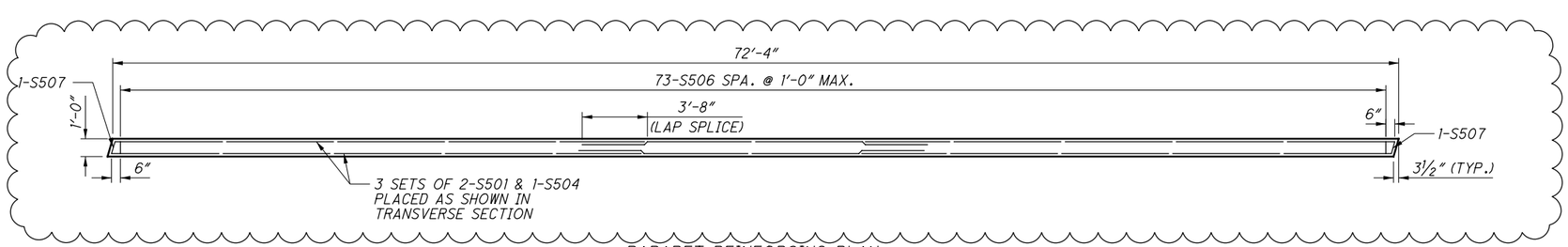

PARAPET REINFORCING PLAN

NOTES:

1. SEE SHEET 31 /45 FOR DECK DRAIN DETAIL AND REINFORCING AT DECK DRAINS

NO.	DATE	DESCRIPTION
1	2024-09-10	RECORD DRAWINGS
0	2019-02-25	RFC

ISSUE RECORD

DESIGN AGENCY
Michael Baker INTERNATIONAL
1111 SUPERIOR AVE E., SUITE 2300, CLEVELAND, OH 44114

DESIGNED	DRAWN	REVIEWED	DATE
JCC	JCC	JWB	11/5/18
CHECKED	REVISED	STRUCTURE FILE NUMBER	
MKB		1801519	

RECORD PLANS

DECK PLAN - SPAN 1
CUY-010-2039
NORFOLK SOUTHERN RAILROAD OVER OH-10
RECORD PLANS

CUY-IR490/SR010-2.09/19.28
PID No. 96833
RECORD PLANS

30/45

32/47

BU-22 - NORFOLK SOUTHERN BRIDGE OVER OH-10
...\Sheets\010_2039C_SD601.dgn 11/22/2024 11:43:59 AM Rohit.Bk

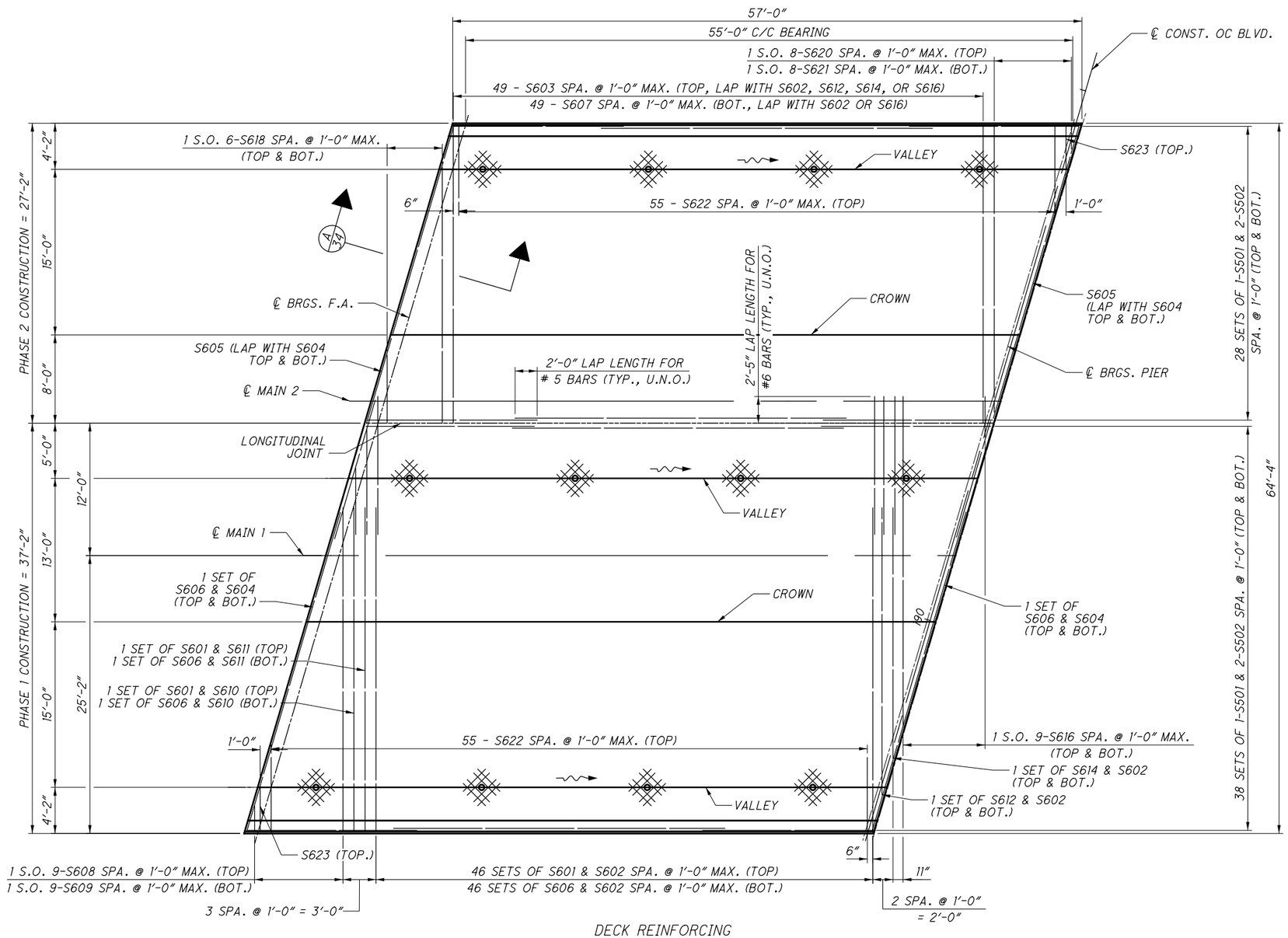

DECK REINFORCING

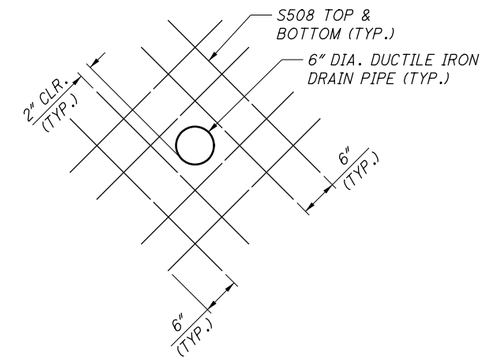

REINFORCING AT DECK DRAIN PIPES

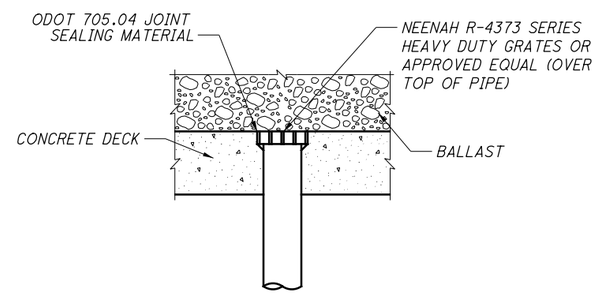

DECK DRAIN DETAIL

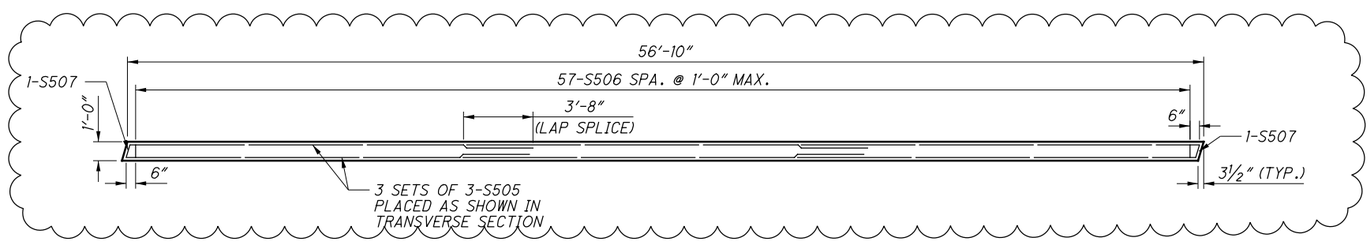

PARAPET REINFORCING PLAN

NO.	DATE	DESCRIPTION
1	2024-09-10	RECORD DRAWINGS
0	2019-02-25	RFC

ISSUE RECORD

DESIGN AGENCY
Michael Baker INTERNATIONAL
1111 SUPERIOR AVE E., SUITE 2300, CLEVELAND, OH 44114

DESIGNED	DRAWN	REVIEWED	DATE
JCC	JCC	JWB	11/5/18
CHECKED	REVISED	STRUCTURE FILE NUMBER	
MKB		1801519	

RECORD PLANS

DECK PLAN - SPAN 2
CUY-010-2039
NORFOLK SOUTHERN RAILROAD OVER OH-10

RECORD PLANS

CUY-IR490/SR010-2.09/19.28
PID No. 96833

RECORD PLANS

BU-22 - NORFOLK SOUTHERN BRIDGE OVER OH-10
...\Sheets\010_2039C_SD602.dgn 11/22/2024 11:44:08 AM Rohit.Bk

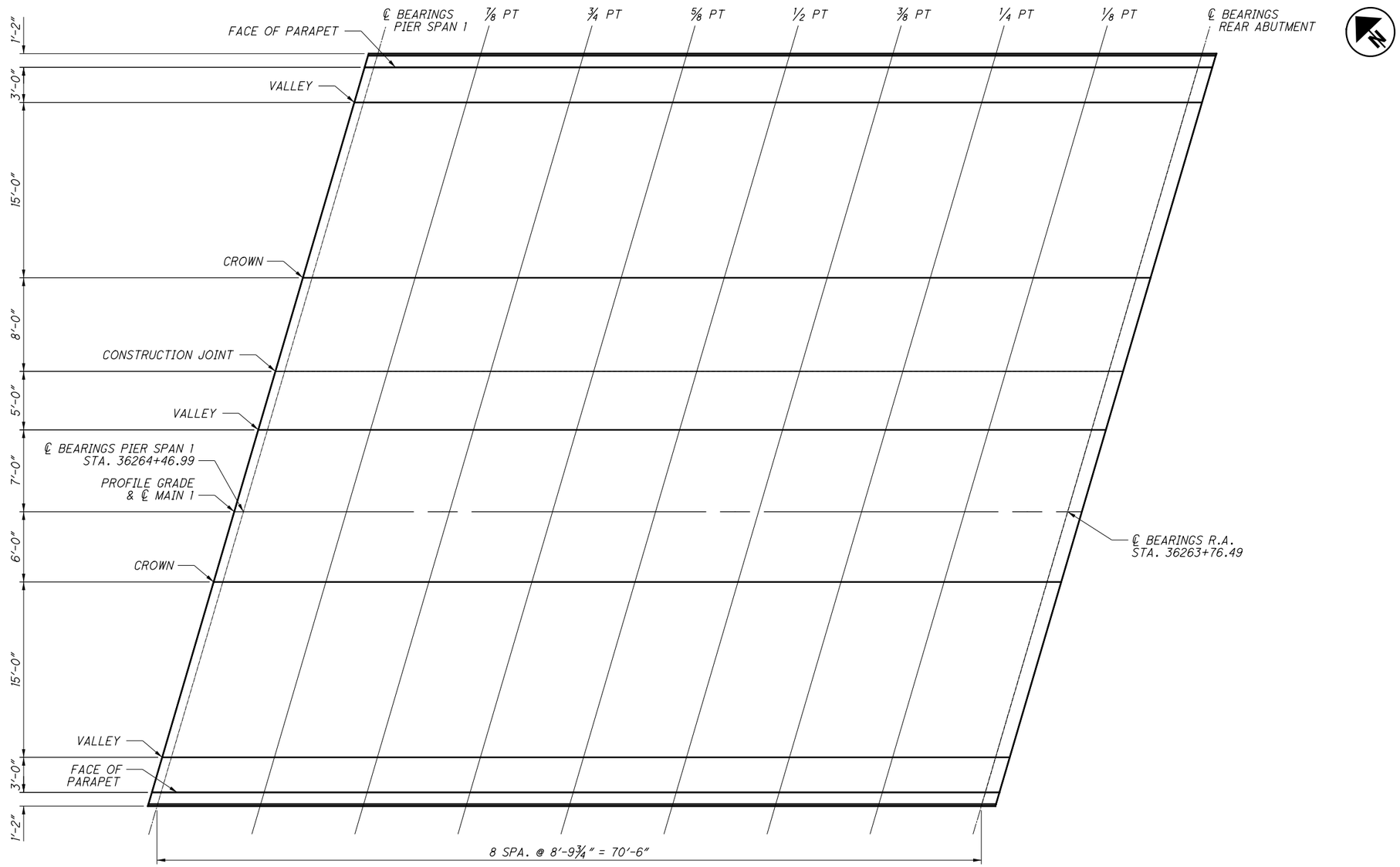

SCREED ELEVATION LOCATION DIAGRAM

← UPSTATION

DECK SCREED ELEVATIONS (FEET)										
ELEVATION LINE	LOCATION OF SCREED LINE	℄ EXPANSION BRG. (PIER, SPAN 1)	7/8 SPAN	3/4 SPAN	5/8 SPAN	1/2 SPAN	3/8 SPAN	1/4 SPAN	1/8 SPAN	℄ FIXED BRG. (R.A.)
FACE OF PARAPET	24.000' LT	699.63	699.63	699.64	699.64	699.63	699.62	699.60	699.57	699.54
VALLEY	21.000' LT	699.59	699.60	699.61	699.61	699.60	699.59	699.57	699.53	699.51
CROWN	6.000' LT	699.74	699.75	699.75	699.76	699.75	699.74	699.71	699.68	699.66
PG'	0.000' RT	699.68	699.68	699.69	699.69	699.68	699.67	699.65	699.62	699.59
VALLEY	7.000' RT	699.60	699.61	699.61	699.62	699.61	699.60	699.57	699.54	699.52
CONSTRUCTION JOINT	12.000' RT	699.65	699.66	699.66	699.67	699.66	699.65	699.62	699.59	699.57
CROWN	20.000' RT	699.73	699.74	699.74	699.75	699.74	699.73	699.70	699.67	699.65
VALLEY	35.000' RT	699.57	699.58	699.59	699.59	699.58	699.57	699.54	699.51	699.49
FACE OF PARAPET	38.000' RT	699.60	699.61	699.62	699.62	699.61	699.60	699.58	699.54	699.52

NOTES:

1. SCREED ELEVATIONS SHOWN ARE FOR THE DECK SLAB SURFACE PRIOR TO CONCRETE PLACEMENT. ALLOWANCE HAS BEEN MADE FOR ANTICIPATED CALCULATED DEAD LOAD DEFLECTIONS DUE TO GIRDER SELF WEIGHT, DECK, PARAPET, & BALLAST.

NO.	DATE	DESCRIPTION
0	2/25/19	RFC

ISSUE RECORD

DESIGN AGENCY
Michael Baker INTERNATIONAL
1111 SUPERIOR AVE E., SUITE 2300, CLEVELAND, OH 44114

DESIGNED	DRAWN	REVIEWED	DATE
JCC	JCC	JWB	11/5/18
CHECKED	REVISED	STRUCTURE FILE NUMBER	
LPC		1801519	

RECORD PLANS

DECK SCREED ELEVATION TABLE - SPAN 1

CUY-010-2039

NORFOLK SOUTHERN RAILROAD OVER OH-10

RECORD PLANS

CUY-IR490/SR010-2.09/19.28

PID No. 96833

RECORD PLANS

RFC SUBMITTAL
BU-22 - NORFOLK SOUTHERN BRIDGE OVER OH-10
...\Sheets\010_2039c_SD603.dgn 3/18/2019 1:43:02 PM ccummings

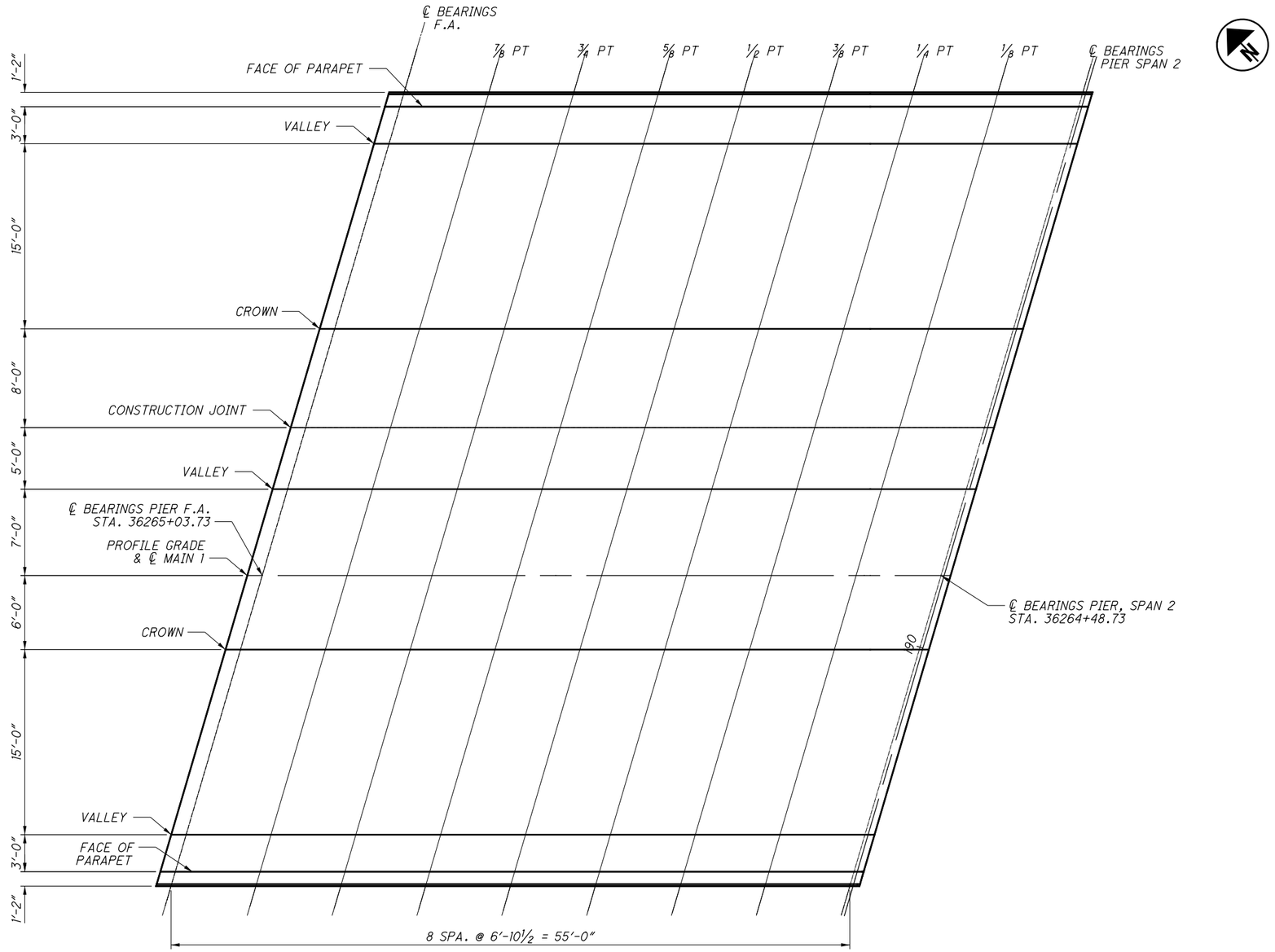

SCREED ELEVATION LOCATION DIAGRAM

← UPSTATION

DECK SCREED ELEVATIONS (FEET)										
ELEVATION LINE	LOCATION OF SCREED LINE	℄ FIXED BRG. (F.A.)	7/8 SPAN	3/4 SPAN	5/8 SPAN	1/2 SPAN	3/8 SPAN	1/4 SPAN	1/8 SPAN	℄ EXPANSION BRG. (PIER, SPAN 2)
FACE OF PARAPET	24.000' LT	699.70	699.65	699.67	699.68	699.69	699.70	699.70	699.70	699.63
VALLEY	21.000' LT	699.66	699.62	699.63	699.65	699.66	699.66	699.67	699.67	699.60
CROWN	6.000' LT	699.81	699.77	699.78	699.80	699.81	699.81	699.81	699.82	699.75
PG'	0.000' RT	699.75	699.71	699.71	699.73	699.74	699.75	699.75	699.76	699.68
VALLEY	7.000' RT	699.67	699.63	699.64	699.66	699.67	699.67	699.67	699.68	699.61
CONSTRUCTION JOINT	12.000' RT	699.72	699.68	699.69	699.71	699.72	699.72	699.72	699.73	699.66
CROWN	20.000' RT	699.80	699.76	699.77	699.79	699.80	699.81	699.80	699.81	699.74
VALLEY	35.000' RT	699.64	699.60	699.61	699.63	699.64	699.64	699.65	699.65	699.58
FACE OF PARAPET	38.000' RT	699.67	699.63	699.64	699.66	699.67	699.67	699.68	699.68	699.61

NOTES:

1. SCREED ELEVATIONS SHOWN ARE FOR THE DECK SLAB SURFACE PRIOR TO CONCRETE PLACEMENT. ALLOWANCE HAS BEEN MADE FOR ANTICIPATED CALCULATED DEAD LOAD DEFLECTIONS DUE TO GIRDER SELF WEIGHT, DECK, PARAPET, & BALLAST.

NO.	DATE	DESCRIPTION
0	2/25/19	RFC

ISSUE RECORD

DESIGN AGENCY
Michael Baker INTERNATIONAL
1111 SUPERIOR AVE E., SUITE 2300, CLEVELAND, OH 44114

DESIGNED	DRAWN	REVIEWED	DATE
JCC	JCC	JWB	11/5/18
CHECKED	REVISED	STRUCTURE FILE NUMBER	
LPC		1801519	

RECORD PLANS

DECK SCREED ELEVATION TABLE - SPAN 2

CUY-010-2039
NORFOLK SOUTHERN RAILROAD OVER OH-10

RECORD PLANS

CUY-IR490/SR010-2.09/19.28
PID No. 96833

RECORD PLANS

33/45

35/47

RFC SUBMITTAL
BU-22 - NORFOLK SOUTHERN BRIDGE OVER OH-10
...\Sheets\010_2039C_SD604.dgn 3/18/2019 1:43:12 PM ccummings

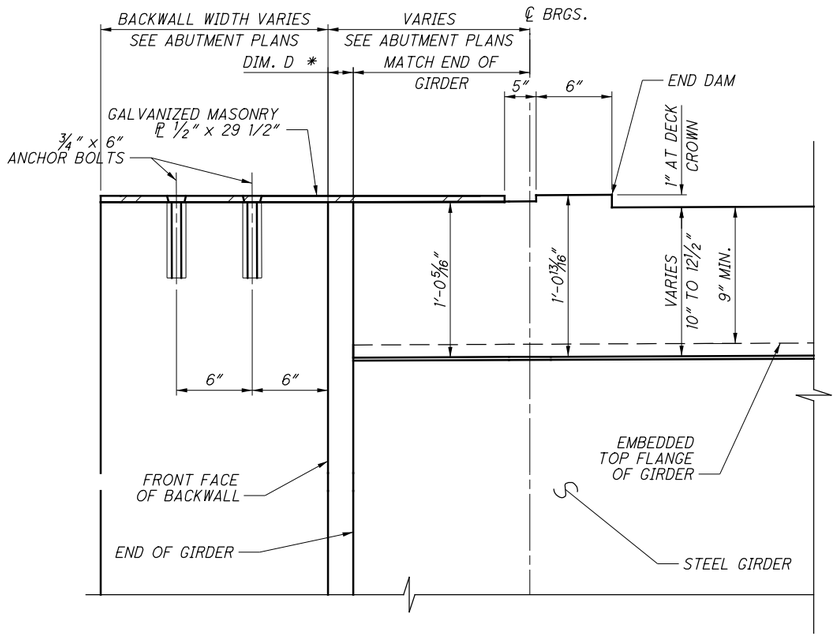

A / 31 SECTION
SEE DECK PLAN

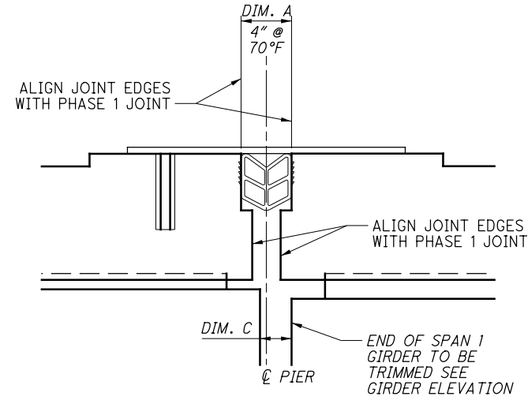

EXPANSION JOINT AT PIER

PHASE 2
SEE PHASE 1 SECTION FOR ADDITIONAL DETAILS

℄ 1 1/4" DIA. CSK. HOLES IN MASONRY PLATES FOR 3/4" DIA. x 6" ANCHOR BOLTS TO BE SET IN FORMED HOLES IN THE CONCRETE AND GROUTED INTO PLACE. MASONRY PLATE TO BE WELDED TO ANCHOR BOLTS IN FIELD AND GROUND SMOOTH (TYP.). AS AN ALTERNATIVE, HOLES FOR ANCHOR BOLTS MAY BE DRILLED AND EPOXY GROUTED. 33-SETS OF 2-HOLES SPACED AT 2'-0" C/C MAXIMUM ALONG ABUTMENT BACKWALL.

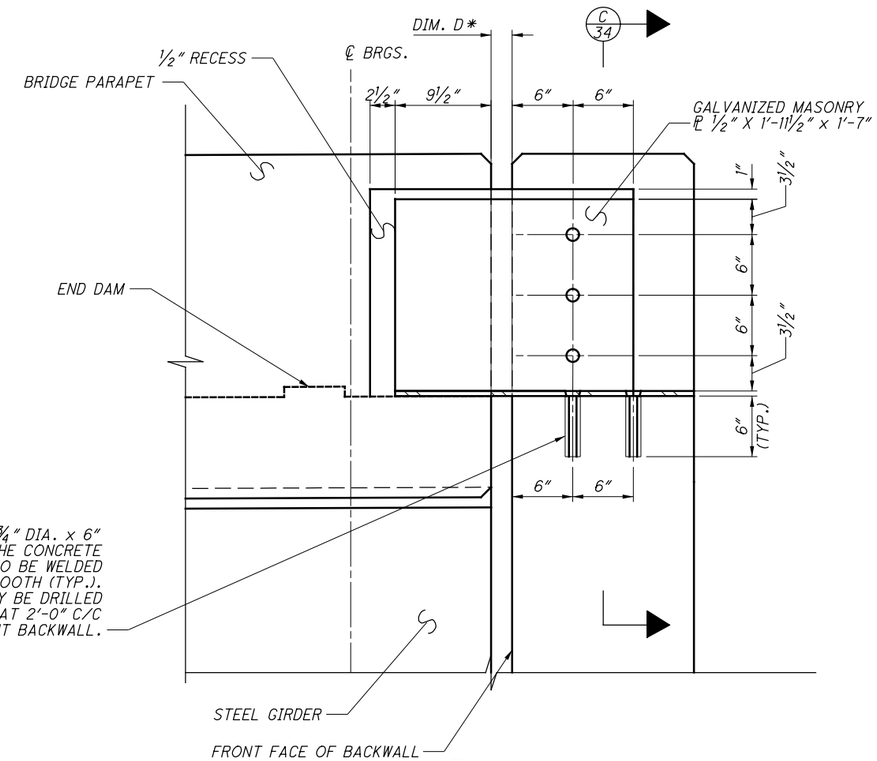

B / 30 DECK JOINT AT ABUTMENT
SEE DECK PLAN

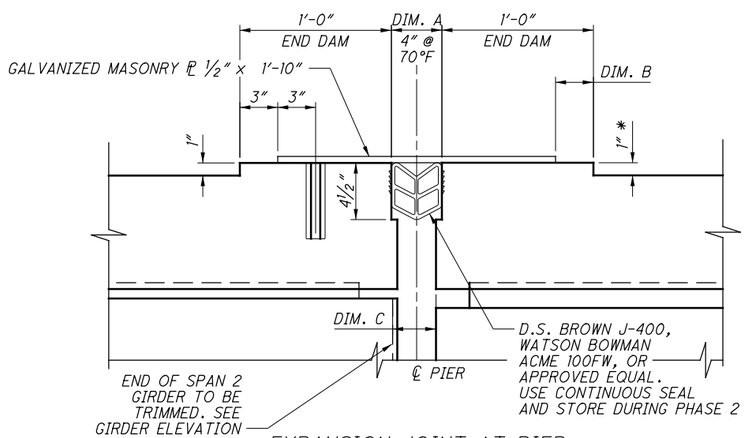

EXPANSION JOINT AT PIER

PHASE 1
* END DAM IS 1"
ABOVE DECK CROWN

TEMPERATURE °F	DIM. A	DIM. B	DIM. C
40	4 5/16	3 5/16	2 13/16
50	4 3/16	3 3/16	2 11/16
60	4 1/8	3 1/8	2 5/8
70	4	3	2 1/2
80	3 7/8	2 7/8	2 3/8
90	3 13/16	2 13/16	2 5/16
100	3 11/16	2 11/16	2 3/16

* SEE ABUTMENT SECTIONS FOR DIM. D.

SEE SHEET27A FOR TABLE OF SUPPLEMENTAL DIMENSION "C" INFORMATION.

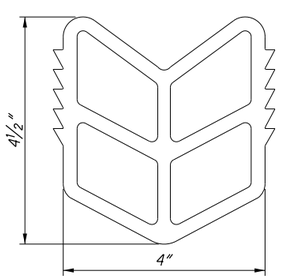

PREFORMED JOINT SEAL

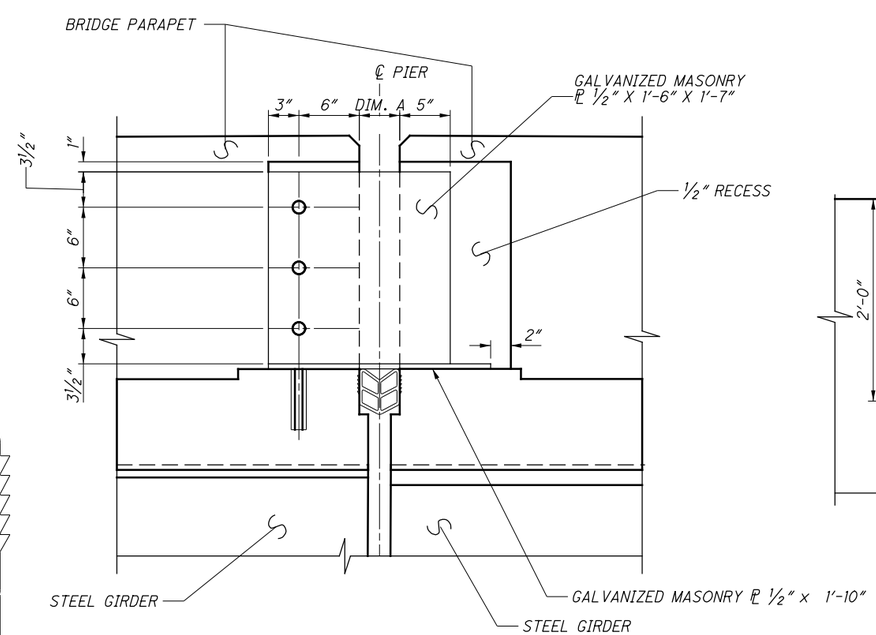

EXPANSION JOINT AT PIER AND BARRIER

PHASE 1 SHOWN, PHASE 2 SIMILAR

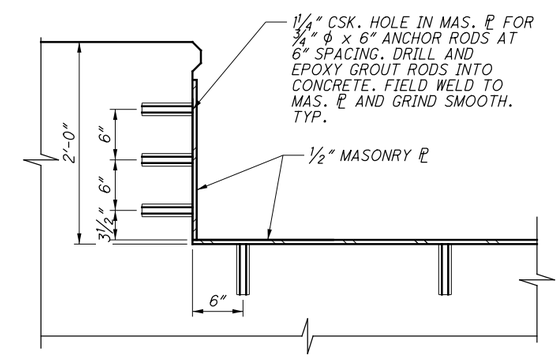

C / 34 SECTION

NO.	DATE	DESCRIPTION
3	2021-08-03	DC054
2	2020-01-10	DC030
1	2019-12-18	DC026
0	2019-02-25	RFC

ISSUE RECORD

DESIGN AGENCY
Michael Baker INTERNATIONAL
1111 SUPERIOR AVE E, SUITE 2300, CLEVELAND, OH 44114

DESIGNED	DRAWN	REVIEWED	DATE
BAH	BAH	JWB	11/5/18
CHECKED	REVISED	STRUCTURE FILE NUMBER	
LJH		1801519	

RECORD PLANS

EXPANSION JOINT DETAILS
CUY-010-2039
NORFOLK SOUTHERN RAILROAD OVER OH-10

RECORD PLANS

CUY-IR490/SR010-2.09/19.28
PID No. 96833

BU-22 - NORFOLK SOUTHERN BRIDGE OVER OH-10
...\Sheets\010_2039C_SX601.dgn 8/9/2021 2:49:37 PM lciborek

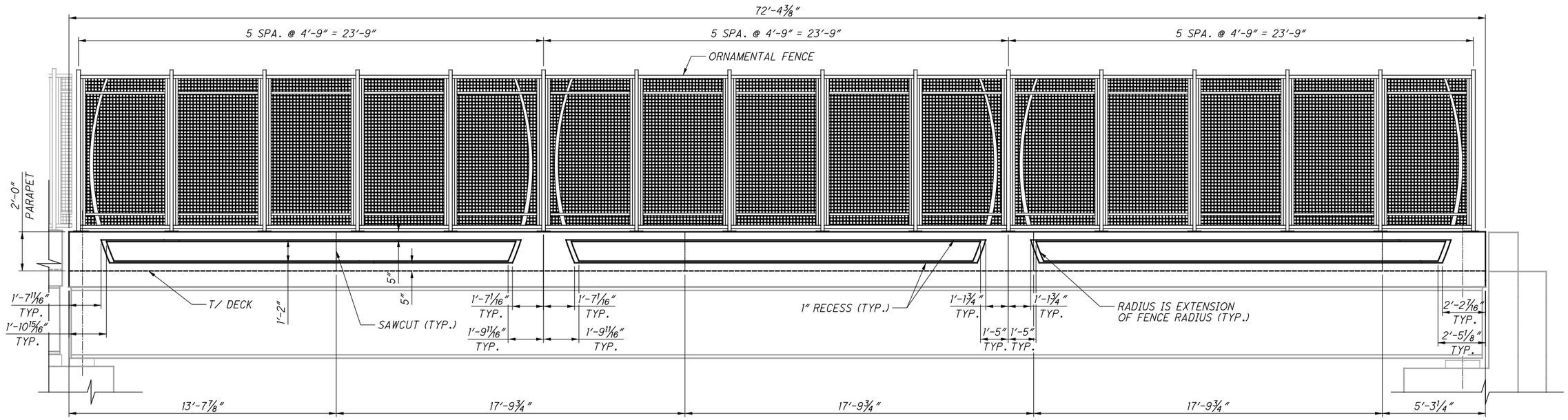

PARAPET ELEVATION - SPAN 1

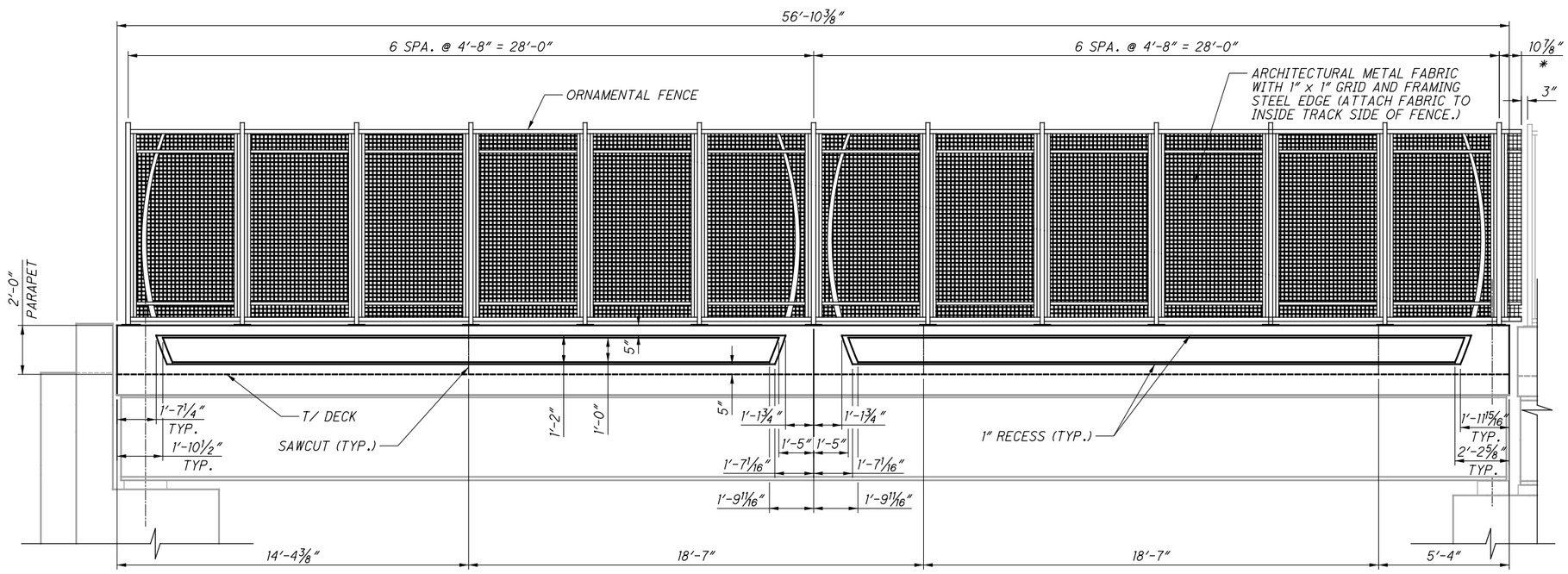

PARAPET ELEVATION - SPAN 2

LEGEND

* PORTION OF RAILING IS TO BE CANTILEVERED OVER EXPANSION JOINT

NO.	DATE	DESCRIPTION
0	2/25/19	RFC

ISSUE RECORD

DESIGN AGENCY
Michael Baker INTERNATIONAL
1111 SUPERIOR AVE E., SUITE 2300, CLEVELAND, OH 44114

DESIGNED	DRAWN	REVIEWED	DATE
BAH	BAH	JWB	11/5/18
CHECKED	REVISED	STRUCTURE FILE NUMBER	
LJH		1801519	

RECORD PLANS

PARAPET DETAILS
CUY-010-2039
NORFOLK SOUTHERN RAILROAD OVER OH-10

RECORD PLANS

CUY-IR490/SR010-2.09/19.28
PID No. 96833

RECORD PLANS

35/45

37/47

RFC SUBMITTAL
BU-22 - NORFOLK SOUTHERN BRIDGE OVER OH-10
...\Sheets\010_2039C_SA603.dgn 3/18/2019 1:43:32 PM ccummings

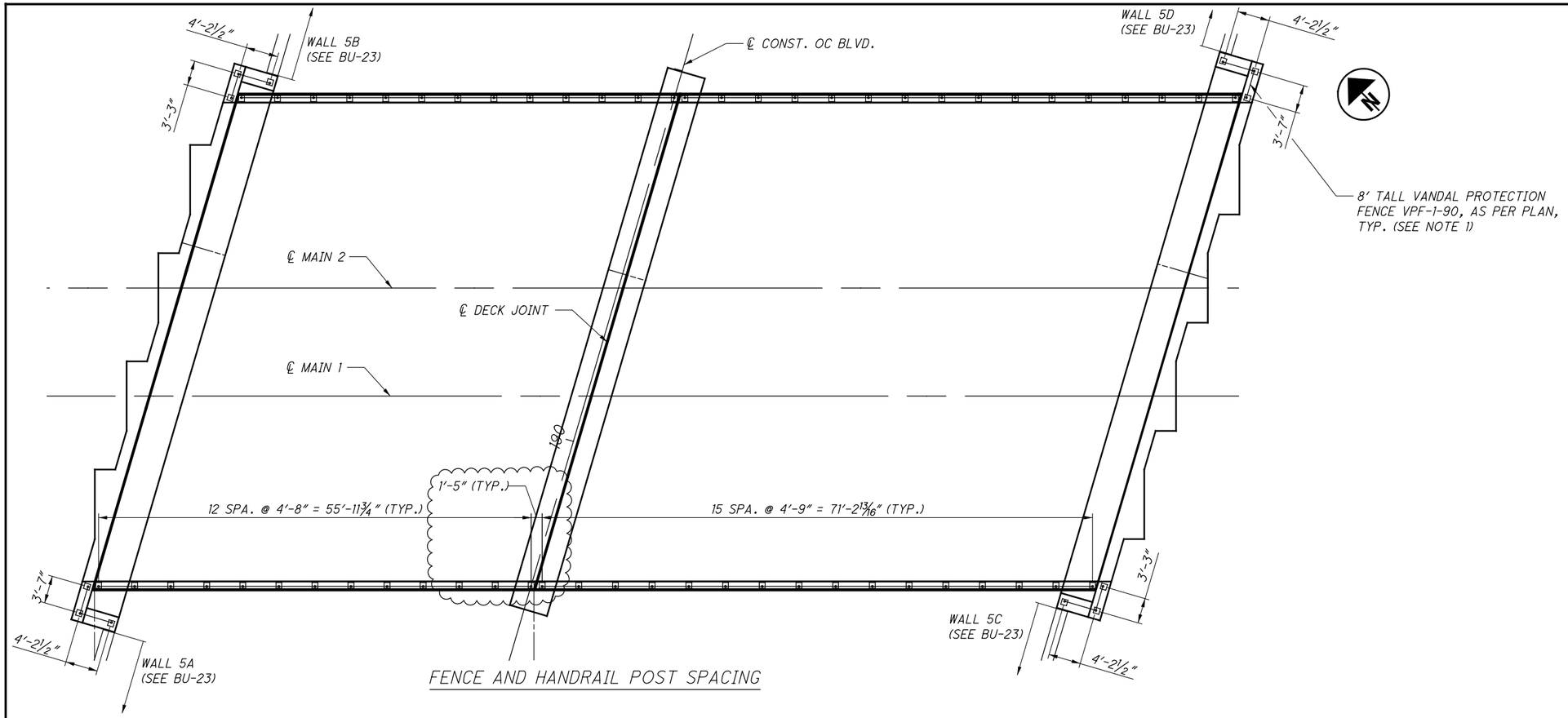

FENCE AND HANDRAIL POST SPACING

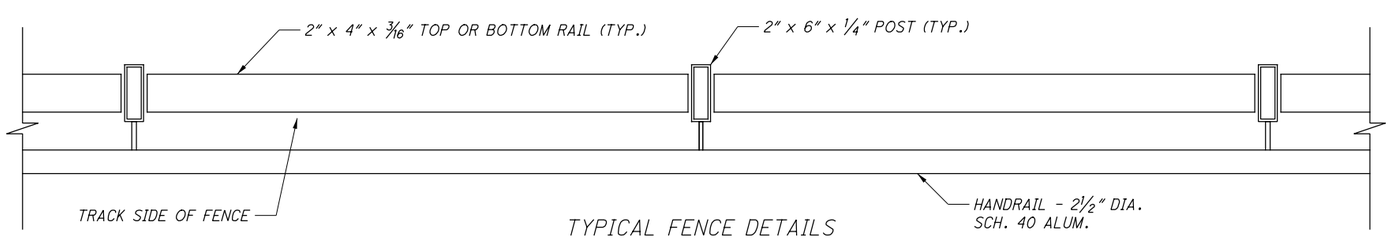

TYPICAL FENCE DETAILS

PLAN VIEW

NOTES:

1. THE FENCE FABRIC SHALL BE CONTINUOUS BETWEEN THE FENCE ON THE WALL AND THE FENCE ON THE BRIDGE ABUTMENT. SEE BU-23 FOR FENCE DETAILS.

NO.	DATE	DESCRIPTION
1	2024-09-10	RECORD DRAWINGS
0	2019-02-25	RFC

ISSUE RECORD

DESIGN AGENCY
Michael Baker INTERNATIONAL
1111 SUPERIOR AVE E., SUITE 2300, CLEVELAND, OH 44114

DESIGNED	DRAWN	REVIEWED	DATE
SSW	SSW	JWB	11/5/18
CHECKED	REVISED	STRUCTURE FILE NUMBER	
LJH		1801519	

RECORD PLANS

FENCE DETAILS (1 OF 4)
CUY-010-2039
NORFOLK SOUTHERN RAILROAD OVER OH-10

RECORD PLANS

CUY-IR490/SR010-2.09/19.28
PID No. 96833

36/45

38/47

BU-22 - NORFOLK SOUTHERN BRIDGE OVER OH-10
...\Sheets\010_2039c_SA601.dgn 11/22/2024 11:44:43 AM Rohit.Bk

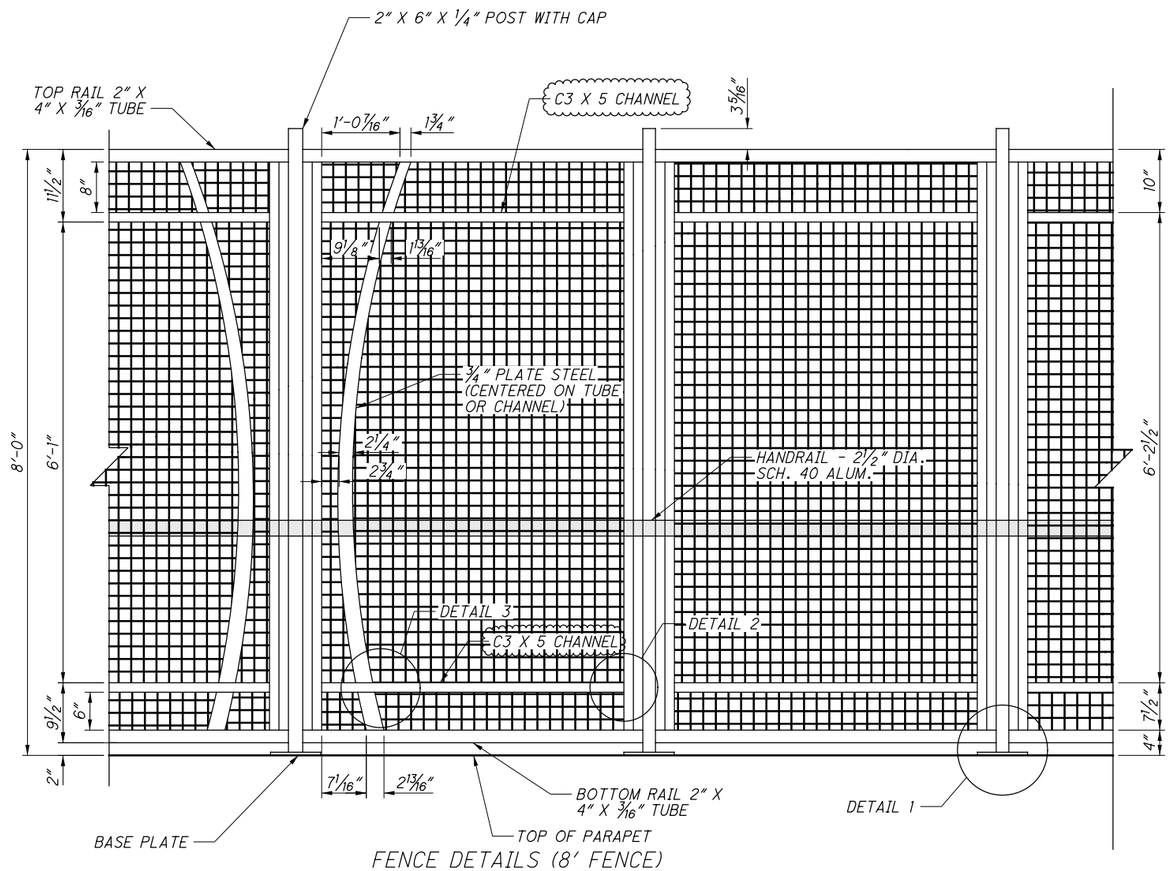

FENCE DETAILS (8' FENCE)

(PLACE FABRIC ON INSIDE, TRACK SIDE OF FENCE)
(FENCE FABRIC FASTENERS NOT SHOWN)

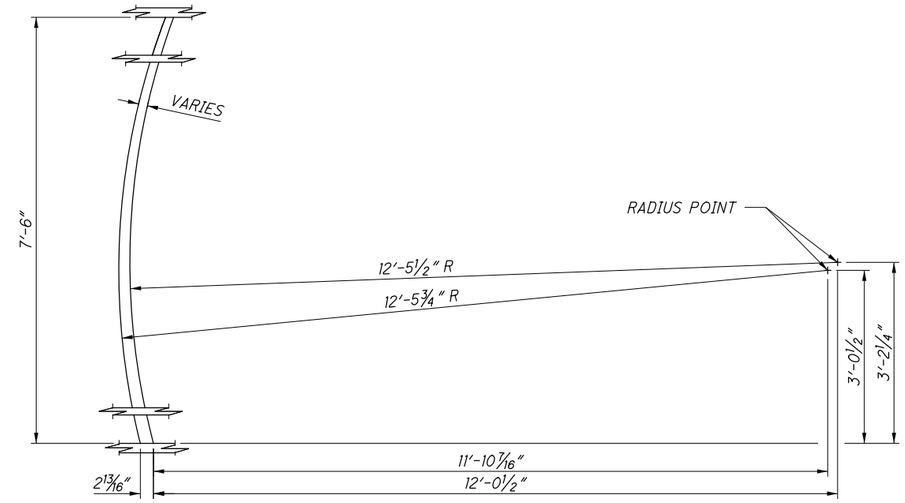

TYPICAL CURVED STEEL PLATE DETAIL

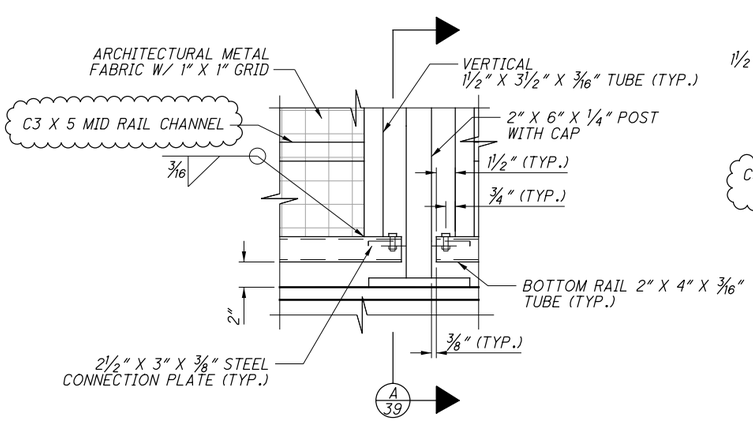

DETAIL 1

(FENCE FABRIC FASTENERS NOT SHOWN)

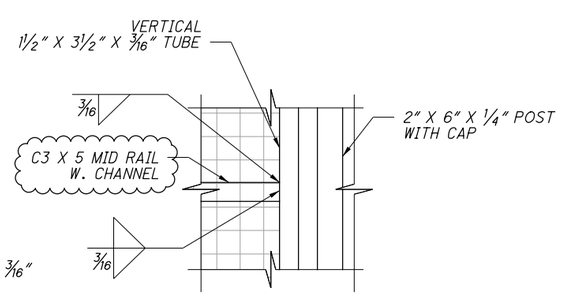

DETAIL 2

(FENCE FABRIC FASTENERS NOT SHOWN)

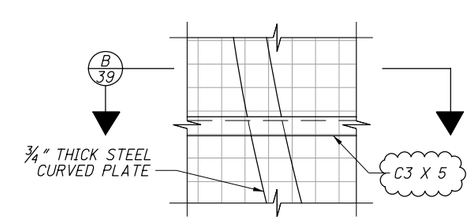

DETAIL 3

NO.	DATE	DESCRIPTION
1	2024-09-10	RECORD DRAWINGS
0	2019-02-25	RFC

ISSUE RECORD

DESIGN AGENCY
Michael Baker INTERNATIONAL
1111 SUPERIOR AVE E., SUITE 2300, CLEVELAND, OH 44114

DESIGNED	DRAWN	REVIEWED	DATE
BAH	BAH	JWB	11/5/18
CHECKED	REVISED	STRUCTURE FILE NUMBER	
LJH		1801519	

RECORD PLANS

FENCE DETAILS (2 OF 4)
CUY-010-2039
NORFOLK SOUTHERN RAILROAD OVER OH-10

RECORD PLANS

CUY-IR490/SR010-2.09/19.28
PID No. 96833

RECORD PLANS

37/45

39/47

BU-22 - NORFOLK SOUTHERN BRIDGE OVER OH-10
...\Sheets\010_2039C_SA607.dgn 11/22/2024 11:44:48 AM Rohit.Bk

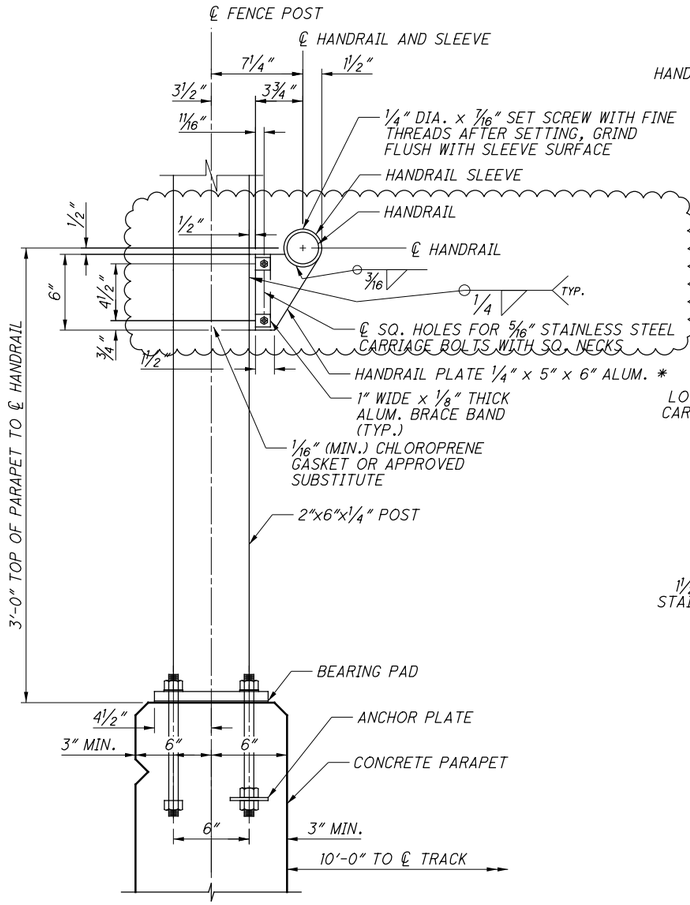

RAILING SECTION DETAIL

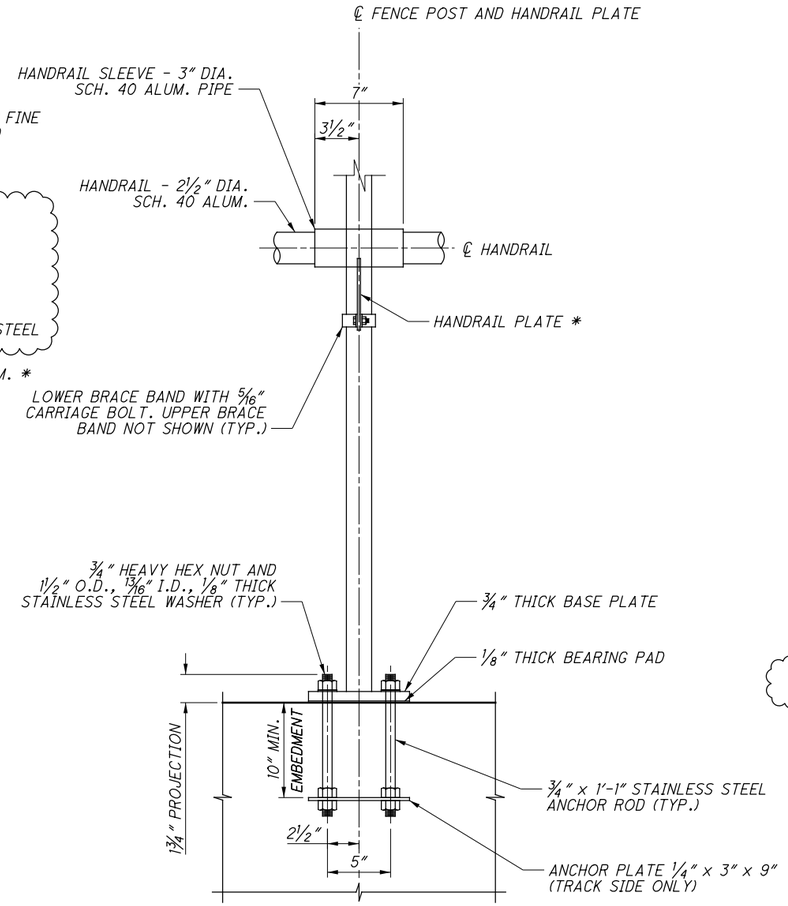

RAILING ELEVATION DETAIL

NOTES:

1. JOINTS IN HANDRAIL SHALL BE LOCATED AT 25'-0" MAXIMUM SPACING.
2. ALL HANDRAIL PIPE SLEEVES AND EXPANSION JOINTS TO BE SMOOTH AND FREE OF ALL SHARP EDGES.
3. ALUMINUM PIPE TO BE ASTM B241, ALLOY 6061-T6, ALUMINUM CLOSURE PLATE, AND HANDRAIL PLATE TO BE ASTM B-209, ALLOY 6061-T6.
4. STAINLESS STEEL BOLTS, NUTS AND ANCHOR RODS TO BE ASTM A-276, TYPE 304. STAINLESS STEEL WASHERS TO BE ASTM A-276, TYPE 302. ANCHOR ROD THREADS SHALL BE ROLLED, NOT CUT.
5. POST TO BE SET PERPENDICULAR TO TOP OF CURB AND RAILS SHALL BE PLACED PARALLEL TO THE GRADE OF THE BRIDGE.
6. CERTIFIED MILL REPORTS ARE NOT REQUIRED FOR RAIL. SHOP INSPECTION IS NOT REQUIRED.
7. AFTER ANCHOR BOLT AND OTHER BOLT NUTS HAVE BEEN TIGHTENED, THREADS SHALL BE NICKED TO LOCK NUTS.
8. THE ALUMINUM BRACE BANDS USED TO SECURE HANDRAIL SLEEVE SHALL BE OF SUCH SIZE NECESSARY TO CLAMP TIGHTLY TO FENCE POST.
9. WELDING SHALL BE IN ACCORDANCE WITH THE CURRENT AWS STRUCTURAL WELDING CODE - ALUMINUM ONLY FOR HANDRAIL COMPONENTS.
10. ANCHOR PLATE SHALL BE STEEL CONFORMING TO ASTM SPECIFICATION A36.
11. UPPER ANCHOR ROD NUTS SHALL BE HEAVY HEX NUTS, PER ASTM A276 TYPE 302 OR 304 STAINLESS STEEL.
12. LOWER ANCHOR ROD NUTS SHALL BE HEAVY HEX NUTS, PER ASTM A307.
13. GAP BETWEEN HANDRAILS INSTALLED AT 3" AT 70° F PER SHOP DRAWINGS.

* ALL EDGES ON HANDRAIL PLATE TO BE ROUNDED - 1/16" RADIUS

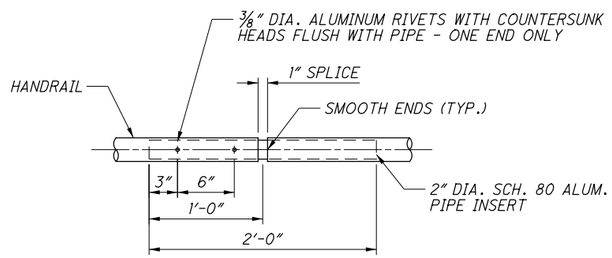

HANDRAIL JOINT DETAIL
AT 25'-0" MAXIMUM INCREMENTS

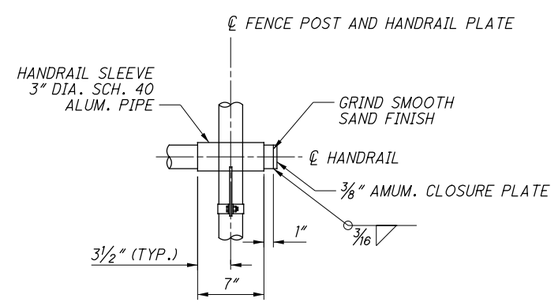

END CLOSURE DETAIL

NO.	DATE	DESCRIPTION
1	2024-09-10	RECORD DRAWINGS
0	2019-02-25	RFC

ISSUE RECORD

DESIGN AGENCY
Michael Baker INTERNATIONAL
1111 SUPERIOR AVE E, SUITE 2300, CLEVELAND, OH 44114

DESIGNED	DRAWN	REVIEWED	DATE
SSW	SSW	JWB	11/5/18
CHECKED	REVISED	STRUCTURE FILE NUMBER	
LJH		1801519	

RECORD PLANS

FENCE DETAILS (3 OF 4)
CUY-010-2039
NORFOLK SOUTHERN RAILROAD OVER OH-10

RECORD PLANS

CUY-IR490/SR010-2.09/19.28
PID No. 96833

RECORD PLANS

38/45

40/47

BU-22 - NORFOLK SOUTHERN BRIDGE OVER OH-10
...\Sheets\010_2039C_SA602.dgn 12/10/2024 4:14:56 PM Rohit.Bk

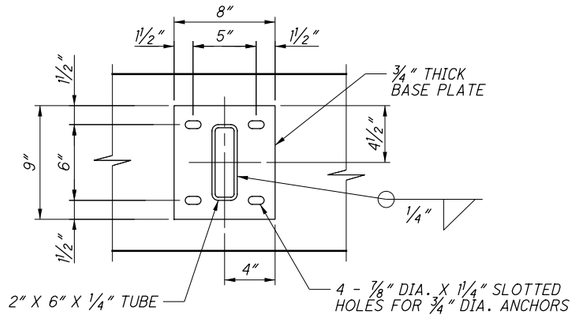

TYPICAL MID-POST BASE PLATE DETAIL

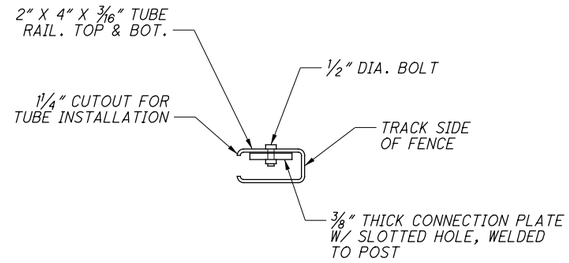

A 37 SECTION

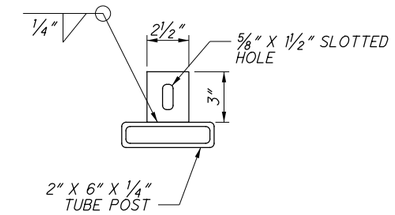

CONNECTION PLATE DETAILS

(PLAN VIEW)

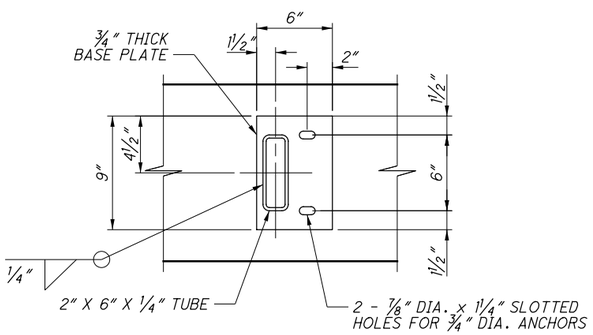

TYPICAL END POST BASE PLATE DETAIL

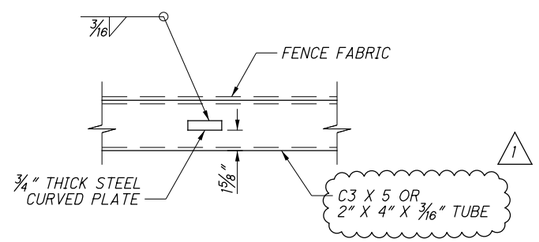

B 37 SECTION

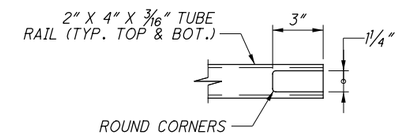

TYPICAL TUBE CUTOUT DETAIL

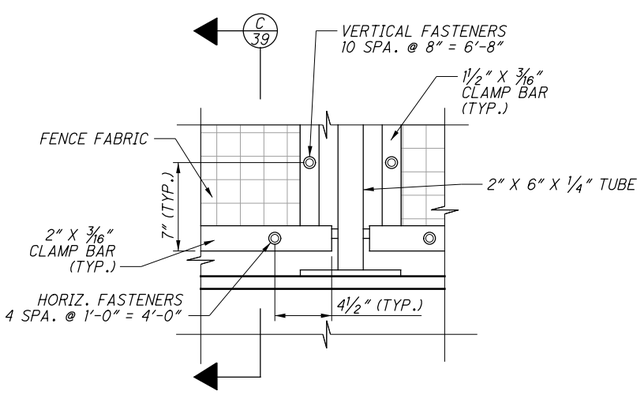

FENCE FABRIC CONNECTION ELEVATION DETAIL

(INTERIOR/TRACK SIDE SHOWN)

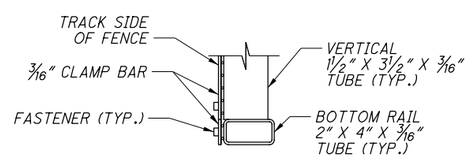

C 39 SECTION

NOTES:

1. ALL POSTS SHALL BE INSTALLED PLUMB. PROVIDE SHIMS MADE FROM MULTI-POLYMER PLASTIC WITH MINIMUM COMPRESSIVE STRENGTH OF 5,000 PSI. ENDS OF POSTS MAY BE CUT ON BIAS TO PROVIDE PLUMB INSTALLATION.
2. SEE ODOT STD. DWG. VPF-1-90 FOR ADDITIONAL NOTES AND DETAILS RELATED TO BASE PLATE SHIMS AND CAULKING.
3. FOR CURVED STEEL PLATE DETAILS, SEE SHEET 37/45 .

NO.	DATE	DESCRIPTION
1	2024-09-10	RECORD DRAWINGS
0	2019-02-25	RFC

ISSUE RECORD

DESIGN AGENCY
Michael Baker INTERNATIONAL
1111 SUPERIOR AVE E., SUITE 2300, CLEVELAND, OH 44114

DESIGNED	DRAWN	REVIEWED	DATE
BAH	BAH	JWB	11/5/18
CHECKED	REVISED	STRUCTURE FILE NUMBER	
LJH		1801519	

RECORD PLANS

FENCE DETAILS (4 OF 4)
CUY-010-2039
NORFOLK SOUTHERN RAILROAD OVER OH-10

RECORD PLANS

CUY-IR490/SR010-2.09/19.28
PID No. 96833

RECORD PLANS

39/45

41/47

BU-22 - NORFOLK SOUTHERN BRIDGE OVER OH-10
...\Sheets\010_2039c_SA606.dgn 11/22/2024 11:44:58 AM Rohit.Bk

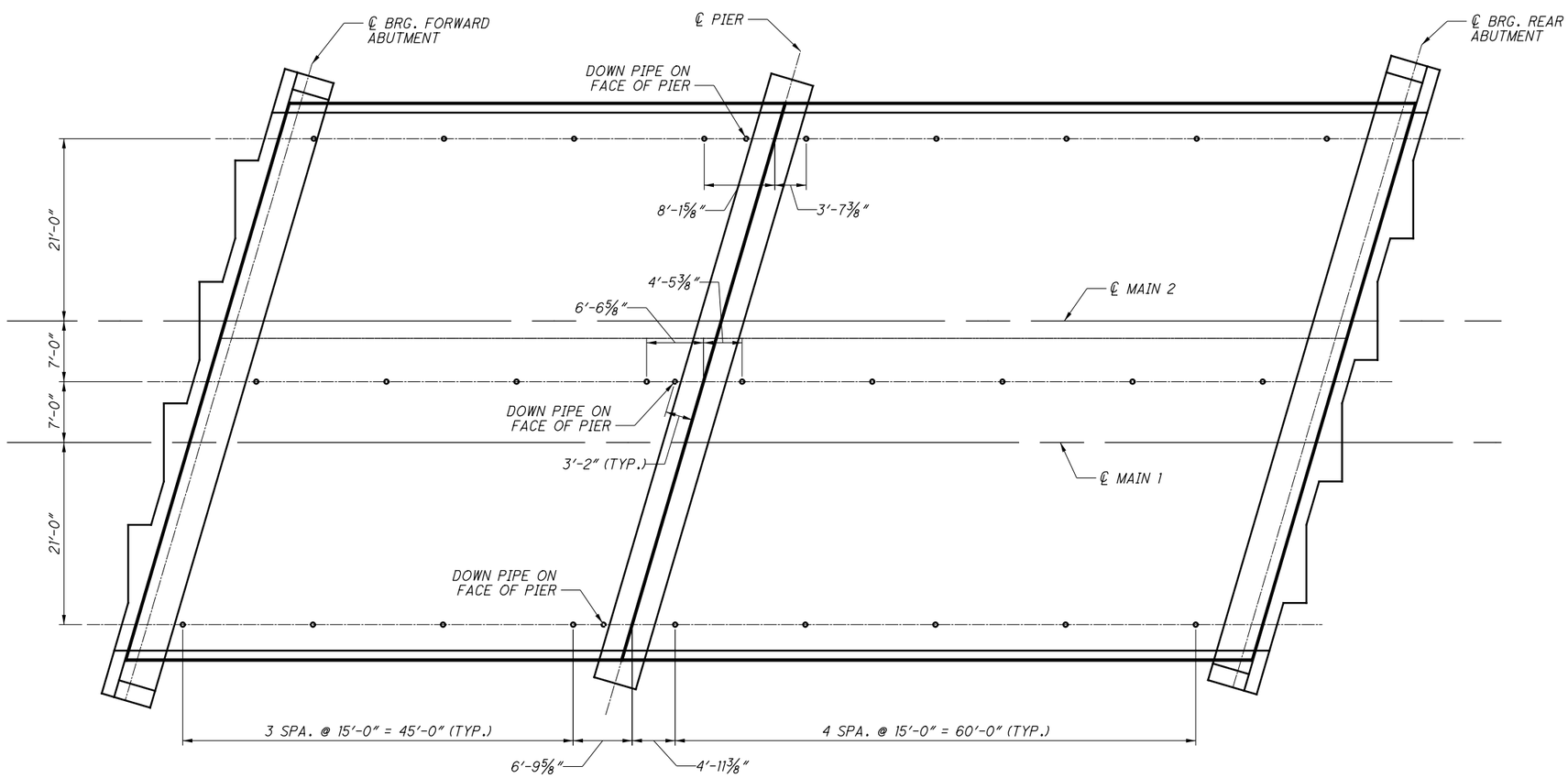

BRIDGE SCUPPER DRAINAGE SYSTEM PLAN

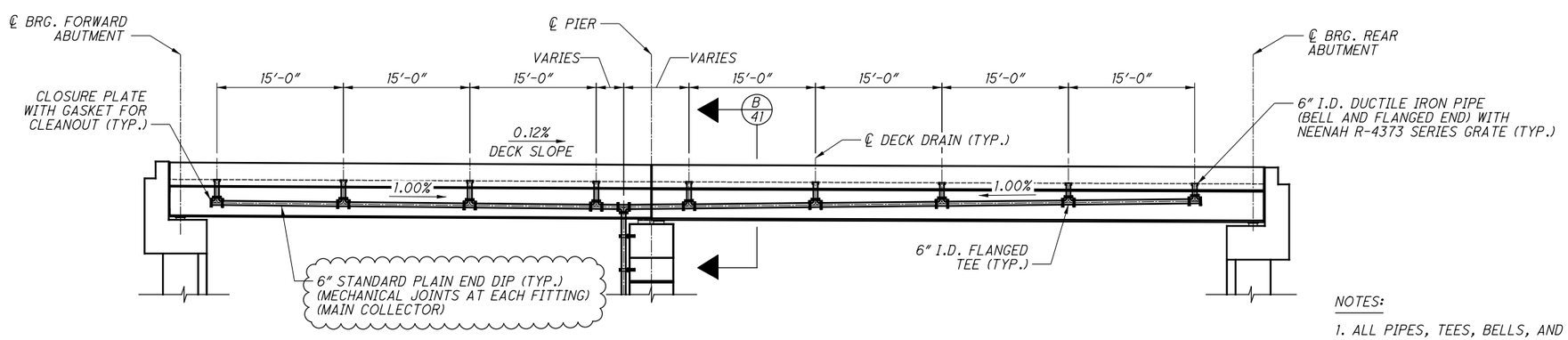

BRIDGE SCUPPER DRAINAGE SYSTEM ELEVATION

← UPSTATION

NOTES:

1. ALL PIPES, TEES, BELLS, AND BENDS SHALL BE CLASS 54 DUCTILE IRON.
2. USE MINIMUM 1% FALL ON DRAIN PIPES.

NO.	DATE	DESCRIPTION
1	2024-09-10	RECORD DRAWINGS
0	2019-02-25	RFC

ISSUE RECORD

DESIGN AGENCY
Michael Baker INTERNATIONAL
1111 SUPERIOR AVE E., SUITE 2300, CLEVELAND, OH 44114

DESIGNED	DRAWN	REVIEWED	DATE
SSW	SSW	JWB	11/5/18
CHECKED	REVISED	STRUCTURE FILE NUMBER	
CDC		1801519	

RECORD PLANS

STRUCTURAL DRAINAGE DETAILS (1 OF 2)
CUY-010-2039
NORFOLK SOUTHERN RAILROAD OVER OH-10

RECORD PLANS

CUY-IR490/SR010-2.09/19.28
PID No. 96833

RECORD PLANS

BU-22 - NORFOLK SOUTHERN BRIDGE OVER OH-10
...\Sheets\010_2039C_SM601.dgn 11/22/2024 11:45:06 AM Rohit.Bk

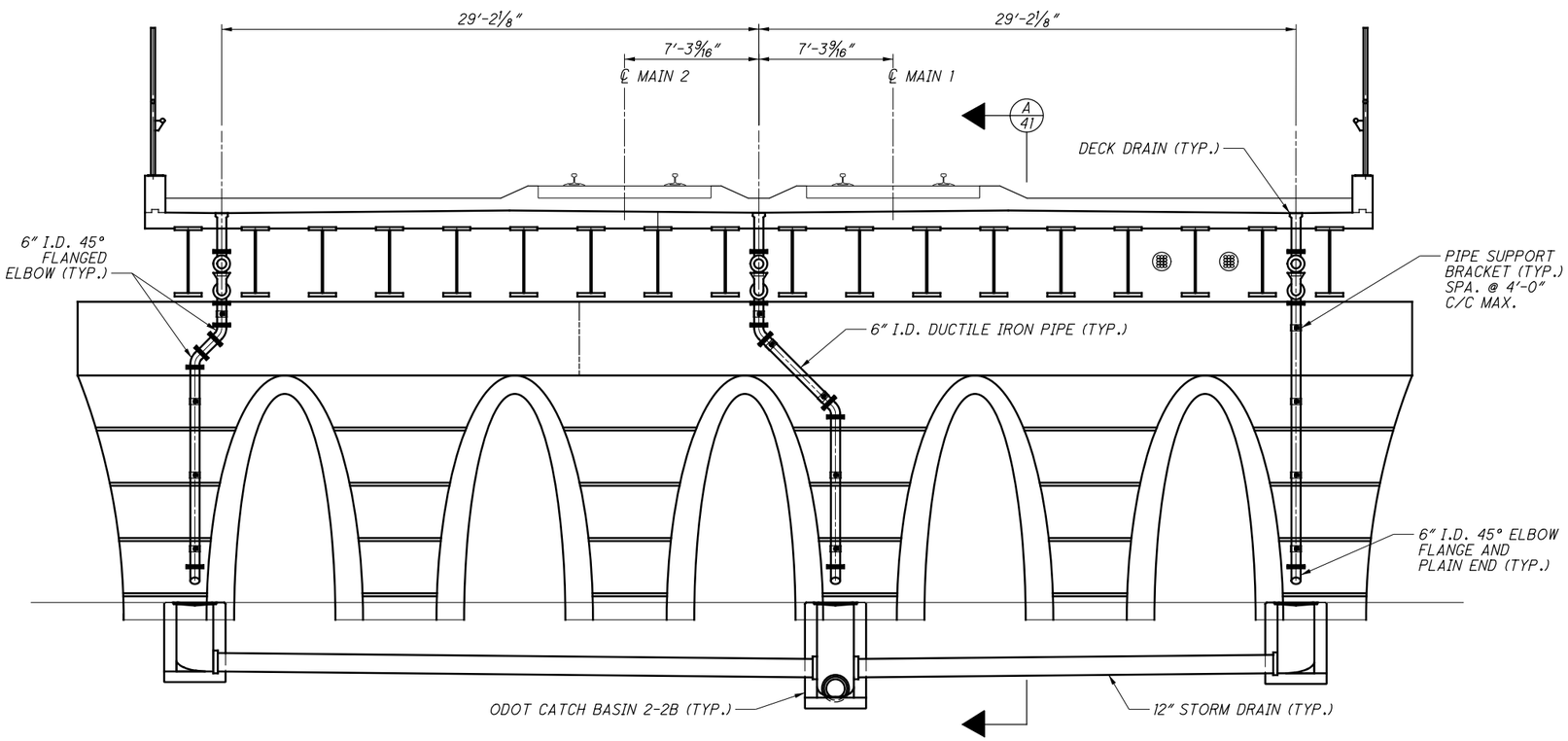

PIER SCUPPER DRAINAGE SYSTEM ELEVATION

(NORTH FACE LOOKING BACKSTATION, ALONG PIER FACE)

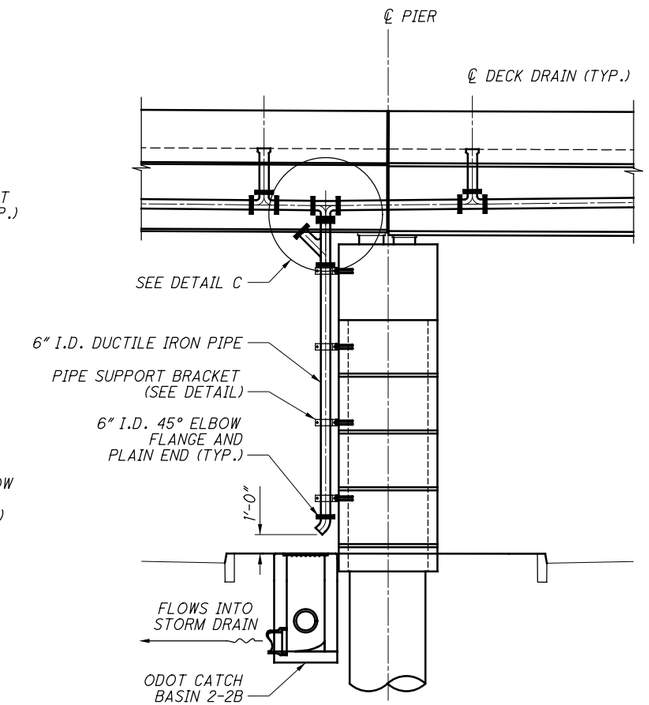

A 41 SECTION

UPSTATION

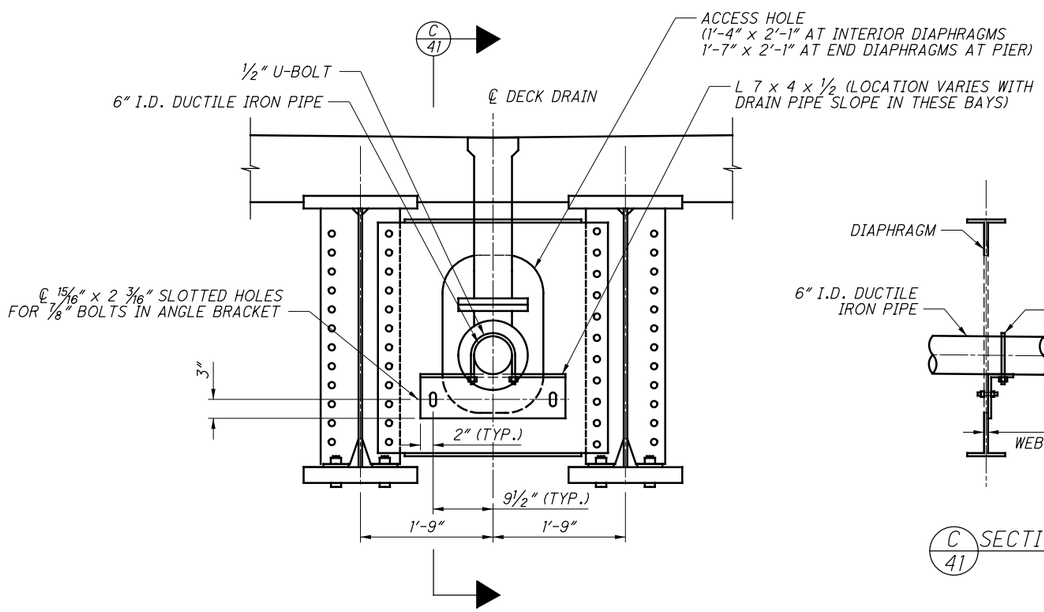

B 40 SECTION

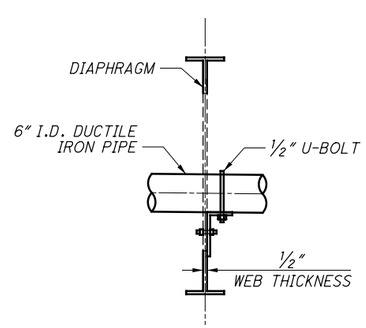

C 41 SECTION

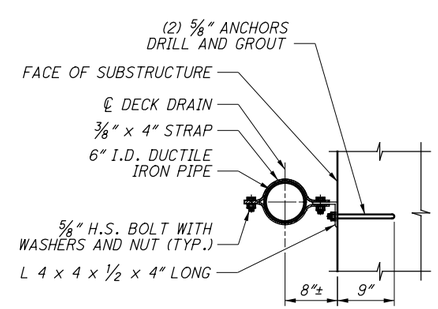

PIPE SUPPORT BRACKET DETAIL

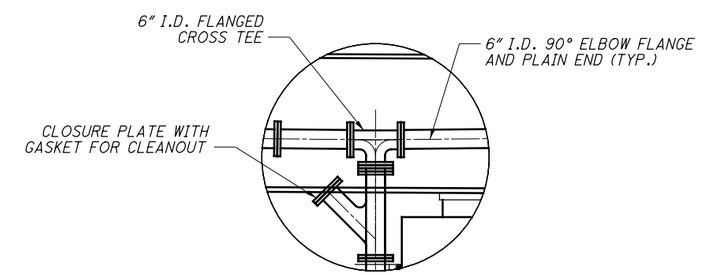

DETAIL C

NOTES:

1. SEE SHEETS 26 & 27 FOR MORE DETAILS ON DIAPHRAGMS

NO.	DATE	DESCRIPTION
0	2/25/19	RFC

ISSUE RECORD

DESIGN AGENCY
Michael Baker INTERNATIONAL
1111 SUPERIOR AVE E., SUITE 2300, CLEVELAND, OH 44114

DESIGNED	DRAWN	REVIEWED	DATE
SSW	SSW	JWB	11/5/18
CHECKED	REVISED	STRUCTURE FILE NUMBER	
CDC		1801519	

RECORD PLANS

STRUCTURAL DRAINAGE DETAILS (2 OF 2)

CUY-010-2039

NORFOLK SOUTHERN RAILROAD OVER OH-10

RECORD PLANS

CUY-IR490/SR010-2.09/19.28

PID No. 96833

RECORD PLANS

41/45

43/47

RFC SUBMITTAL
BU-22 - NORFOLK SOUTHERN BRIDGE OVER OH-10
...\Sheets\010_2039c_SM602.dgn 3/18/2019 1:44:52 PM ccummings

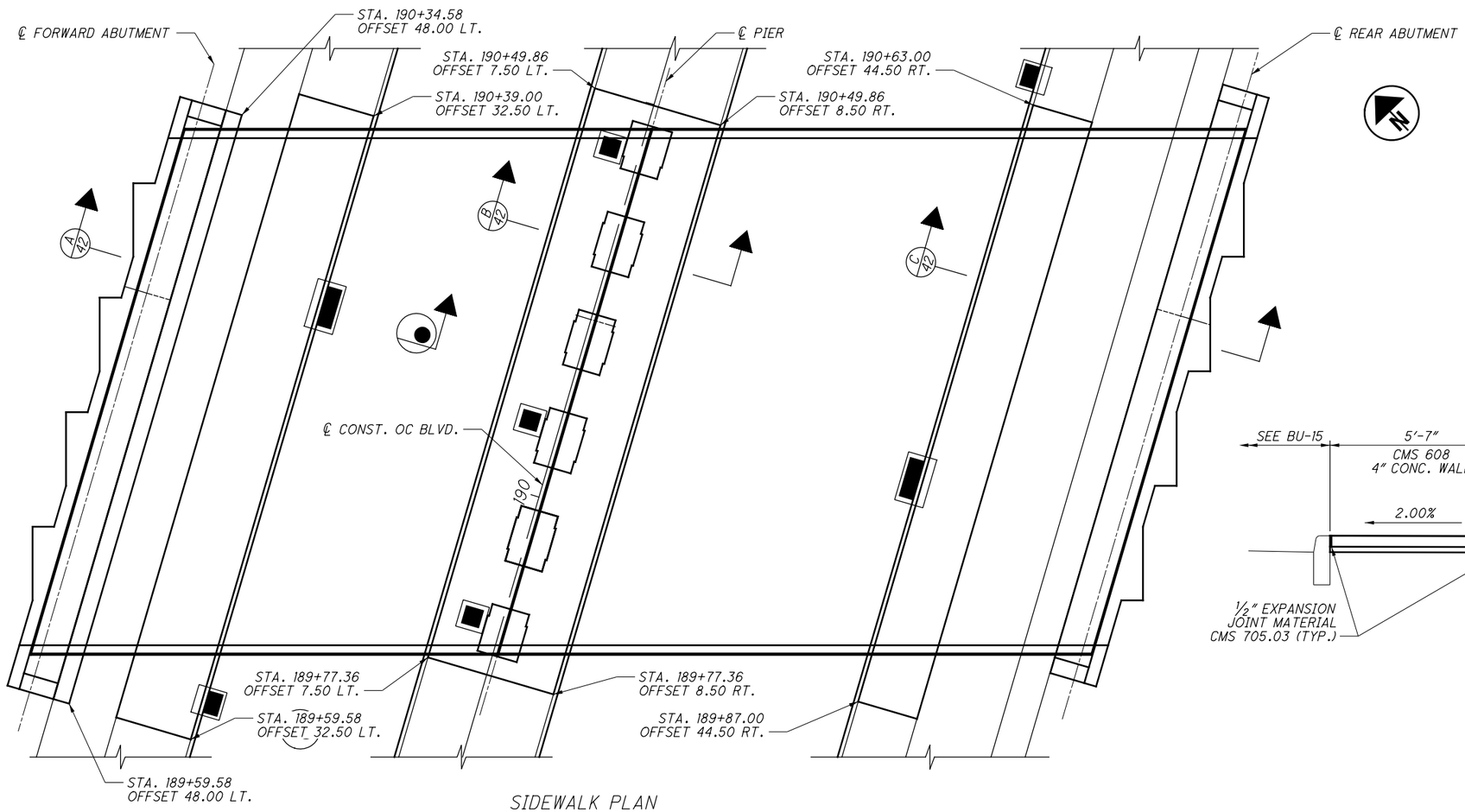

SIDEWALK PLAN

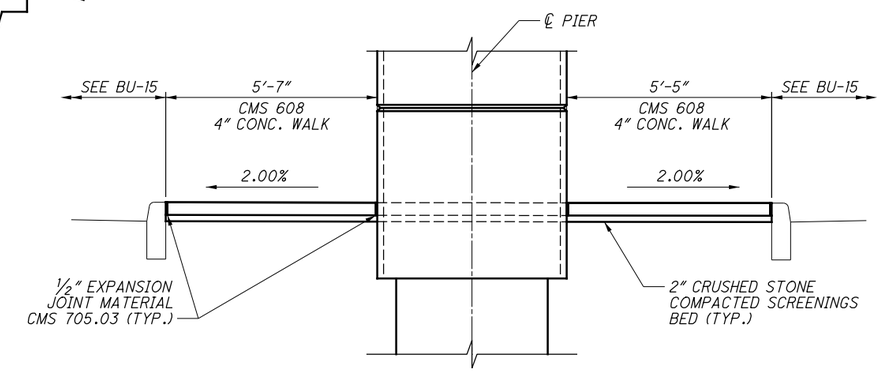

B 42 SECTION

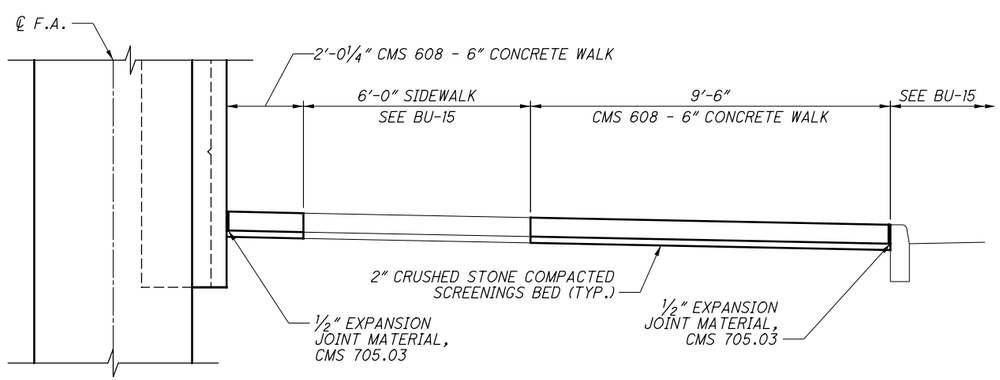

A 42 SECTION

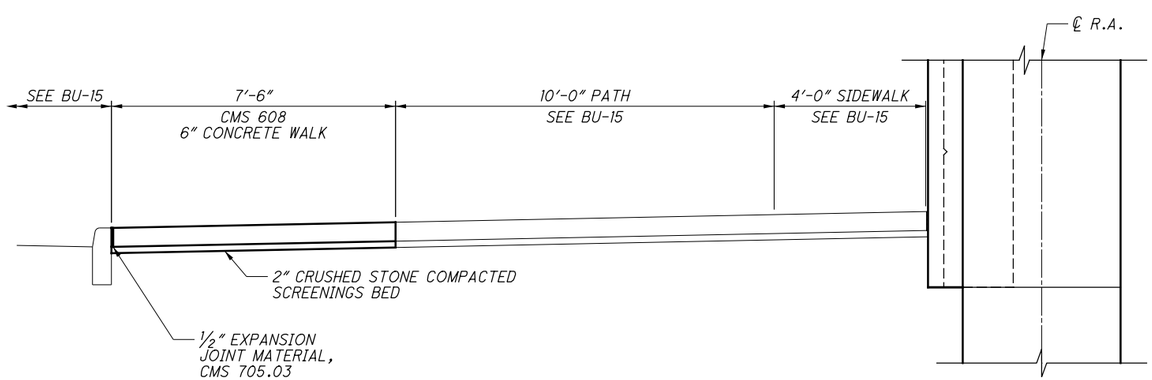

C 42 SECTION

NOTES:

1. REFER TO ODOT CMS 601.07 FOR REQUIRED CONTROL JOINT SPACING.

NO.	DATE	DESCRIPTION
0	2/25/19	RFC

ISSUE RECORD

DESIGN AGENCY
Michael Baker INTERNATIONAL
1111 SUPERIOR AVE E., SUITE 2300, CLEVELAND, OH 44114

DESIGNED	DRAWN	REVIEWED	DATE
SSW	SSW	JWB	11/5/18
CHECKED	REVISED	STRUCTURE FILE NUMBER	
CDC		1801519	

RECORD PLANS

SIDEWALK DETAILS
CUY-010-2039
NORFOLK SOUTHERN RAILROAD OVER OH-10

RECORD PLANS

CUY-IR490/SR010-2.09/19.28
PID No. 96833

RECORD PLANS

RFC SUBMITTAL
BU-22 - NORFOLK SOUTHERN BRIDGE OVER OH-10
...\Sheets\010_2039C_SM603.dgn 3/18/2019 1:45:11 PM ccummings

REAR ABUTMENT

MARK	NUMBER TOTAL	LENGTH	WEIGHT (LBS.)	TYPE	DIMENSIONS A	B	C	D	E	R	SER INC.
RA401	112	2'-5"	181	19	1'-0"	1'-0"	1'-0"				
RA501	30	30'-0"	939	STR.							
RA502	32	19'-11"	663	STR.							
RA503	32	28'-4"	944	STR.							
RA504	208	12'-10"	2784	2	4'-9"	3'-7"	4'-9"				
RA505	2	14'-3"	30	STR.							
RA506	2	2'-3"	5	STR.							
RA507	2	7'-3"	15	STR.							
RA508	2	10'-9"	22	STR.							
RA509	120	4'-11"	615	2	2'-0"	1'-2"	2'-0"				
RA510	8	5'-0"	42	2	2'-0"	1'-2 1/2"	2'-0"				
RA511	13	9'-11"	134	2	4'-6"	1'-2"	4'-6"				
RA512	7	10'-2"	74	1	5'-5"	4'-10"					
RA513	7	7'-10"	57	1	4'-5"	3'-6"					
RA514	1	9'-0"	9	1	4'-11"	4'-2"					
RA515	7	7'-3"	53	1	4'-5"	2'-11"					
RA516	7	10'-2"	74	1	5'-5"	4'-10"					
RA517	1	8'-8"	9	1	4'-11"	3'-10					
RA518	2	7'-11"	17	1	1'-1 1/2"	6'-11"					
RA519	10	10'-4"	108	2	4'-6"	1'-6 3/4"	4'-6"				
RA520	10	13'-6"	141	2	6'-1"	1'-6 3/4"	6'-1"				
	4	4'-9"				1'-0"					
RA521	SER. OF	TO	185	2	2'-0"		2'-0"				2 11/16"
	8	6'-4"				2'-7"					
RA522	33	14'-0"	482	38	1'-2 1/2"	8'-3	3'-6"				
RA523	11	14'-0"	161	39	1'-2 1/2"	2'-8 7/8"	5'-6 7/8"	3'-6"			
RA524	8	11'-0"	92	1	5'-1"	6'-0"					
RA525	8	12'-5"	104	1	6'-6"	6'-0"					
RA526	1	2'-0"	2	STR.							
RA527	2	3'-6"	7	STR.							
RA528	30	30'-0"	939	STR.							
RA529	15	22'-0"	344	STR.							
RA530	82	14'-4"	1226	STR.							
RA531	30	5'-9"	180	12	1'-0 1/4"	1'-0 1/4"	1'-11 7/8"	1'-1"	1'-6 1/2"		
RA532	60	4'-9"	297	2	0'-8"	3'-8"	0'-8"				
RA533	32	7'-6"	250	37	3'-9"	3'-9"					
RA601	20	12'-9"	383	1	8'-11"	4'-0"					
RA602	20	9'-8"	290	2	3'-0"	4'-0"	3'-0"				
RA603	20	11'-9"	353	1	8'-11"	3'-0"					
RA604	20	8'-8"	260	2	3'-0"	3'-0"	3'-0"				
RA901	120	14'-3"	5814	2	6'-10"	1'-2"	6'-10"				
RA902	6	14'-4"	292	2	6'-10"	1'-2 1/2"	6'-10"				
RA903	2	7'-3"	49	2	3'-3	1'-2 1/2"	3'-3				
		TOTAL:	18626	LBS.							

FORWARD ABUTMENT

MARK	NUMBER TOTAL	LENGTH	WEIGHT (LBS.)	TYPE	DIMENSIONS A	B	C	D	E	R	SER INC.
FA401	112	2'-5"	181	19	1'-0"	1'-0"	1'-0"				
FA501	30	30'-0"	939	STR.							
FA502	32	24'-4"	812	STR.							
FA503	32	23'-10"	795	STR.							
FA504	208	12'-10"	2784	2	4'-9"	3'-7"	4'-9"				
FA505	2	13'-6"	28	STR.							
FA506	2	2'-3"	5	STR.							
FA507	2	7'-3"	15	STR.							
FA508	2	11'-6"	24	STR.							
FA509	108	4'-11"	554	2	2'-0"	1'-2"	2'-0"				
FA510	8	5'-0"	42	2	2'-0"	1'-2 1/2"	2'-0"				
FA511	13	9'-11"	134	2	4'-6"	1'-2"	4'-6"				
FA512	7	10'-1"	74	1	5'-4"	4'-10"					
FA513	7	7'-10"	57	1	4'-5"	3'-6"					
FA514	1	9'-0"	9	1	4'-11"	4'-2"					
FA515	7	7'-3"	53	1	4'-5"	2'-11"					
FA516	7	10'-2"	74	1	5'-5"	4'-10"					
FA517	1	8'-8"	9	1	4'-11"	3'-10					
FA518	2	7'-8"	16	1	1'-1 1/2"	6'-8"					
FA519	10	10'-4"	108	2	4'-6"	1'-6 3/4"	4'-6"				
FA520	10	13'-2"	137	2	5'-11"	1'-6 3/4"	5'-11"				
	4	4'-9"				1'-0"					
FA521	SER. OF	TO	185	2	2'-0"		2'-0"				2 11/16"
	8	6'-4"				2'-7"					
FA522	44	14'-0"	642	38	1'-2 1/2"	8'-3	3'-6"				
FA523	NOT	USED									
FA524	8	10'-10"	90	1	4'-11"	6'-0"					
FA525	8	12'-5"	104	1	6'-6"	6'-0"					
FA526	1	2'-0"	2	STR.							
FA527	2	3'-6"	7	STR.							
FA528	30	30'-0"	939	STR.							
FA529	15	22'-0"	344	STR.							
FA530	82	14'-4"	1226	STR.							
FA531	30	5'-9"	180	12	1'-0 1/4"	1'-0 1/4"	1'-11 7/8"	1'-1"	1'-6 1/2"		
FA532	60	4'-9"	297	2	0'-8"	3'-8"	0'-8"				
FA533	32	7'-6"	250	37	3'-9"	3'-9"					
FA601	20	12'-6"	376	1	8'-8"	4'-0"					
FA602	20	9'-8"	290	2	3'-0"	4'-0"	3'-0"				
FA603	20	11'-6"	345	1	8'-8"	3'-0"					
FA604	20	8'-8"	260	2	3'-0"	3'-0"	3'-0"				
FA901	108	13'-11"	5110	2	6'-8"	1'-2"	6'-8"				
FA902	6	14'-0"	286	2	6'-8"	1'-2 1/2"	6'-8"				
FA903	2	7'-3"	49	2	3'-3	1'-2 1/2"	3'-3				
		TOTAL:	17832	LBS.							

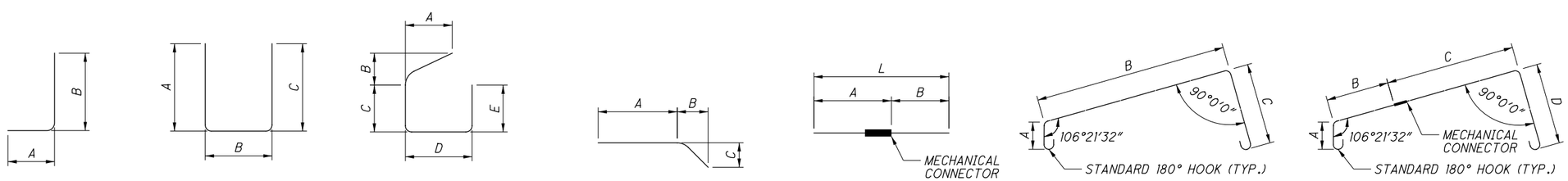

NO.	DATE	DESCRIPTION
0	2/25/19	RFC

ISSUE RECORD

DESIGN AGENCY
Michael Baker INTERNATIONAL
1111 SUPERIOR AVE E., SUITE 2300, CLEVELAND, OH 44114

DESIGNED	DRAWN	REVIEWED	DATE
JCC	BAH	JWB	11/5/18
CHECKED	REVISED	STRUCTURE FILE NUMBER	
MKB		1801519	

RECORD PLANS

REINFORCING SCHEDULE (1 OF 3)
CUY-010-2039
NORFOLK SOUTHERN RAILROAD OVER OH-10

RECORD PLANS

CUY-IR490/SR010-2.09/19.28
PID No. 96833

RECORD PLANS

43/45

45/47

RFC SUBMITTAL
BU-22 - NORFOLK SOUTHERN BRIDGE OVER OH-10
...\Sheets\010_2039C_SL601.dgn 3/18/2019 1:45:22 PM ccummings

PIER											
MARK	NUMBER TOTAL	LENGTH	WEIGHT (LBS.)	TYPE	DIMENSIONS						SER INC.
					A	B	C	D	E	R	
P401	84	2'-5"	136	19	1'-0"	1'-0"	1'-0"				
	8	5'-5"				3'-8"					
P501	SER. OF	TO	1049	2	1'-0"	TO	1'-0"				8 1/2"
	13	13'-11"				12'-2"					
P502	156	8'-11"	1451	2	2'-6"	4'-2"	2'-6"				
P503	84	12'-10"	1124	STR.							
	4	5'-11"				4'-2"					
P504	SER. OF	TO	429	2	1'-0"	TO	1'-0"				4"
	13	9'-11"				10'-11"					
P505	NOT	USED									
P506	60	13'-0"	814	42	13'-0"					23'-0"	
P507	NOT	USED									
P508	NOT	USED									
P509	6	30'-0"	188	STR.							
P510	4	24'-6"	102	STR.							
P511	2	19'-6"	41	STR.							
P512	10	12'-10"	134	42	12'-10"					36'-2"	
P601	308	12'-10"	5937	2	4'-3"	4'-8"	4'-3"				
P602	226	10'-2"	3451	2	4'-3"	2'-0"	4'-3"				
P603	58	11'-8"	1016	2	4'-3"	3'-6"	4'-3"				
P1101	8	46'-11"	1994	40	2'-2"	45'-1"					
P1102	9	46'-0"	2200	41	44'-5"						
P1103	8	28'-11"	1229	1	2'-2"	27'-1"					
P1104	14	28'-0"	2083	16	26'-5"						
P1105	9	46'-9"	2235	40	2'-2"	44'-11"					
P1106	14	28'-9"	2138	1	2'-2"	26'-11"					
P1107	5	23'-9"	631	40	2'-2"	21'-11"					
P1108	5	23'-0"	611	41	21'-5"						
P1109	10	23'-0"	1222	43	23'-0"						
		TOTAL:	30215	LBS.							

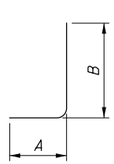

TYPE-1

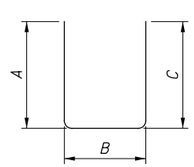

TYPE-2

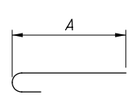

TYPE-16

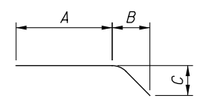

TYPE-19

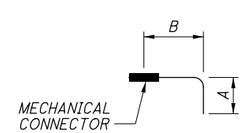

TYPE-40

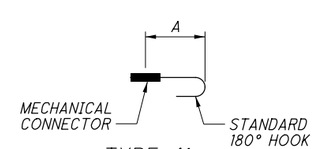

TYPE-41

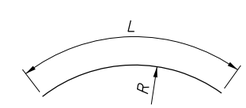

TYPE-42

FIELD BENDING OPTIONAL

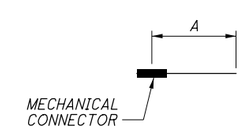

TYPE-43

NO.	DATE	DESCRIPTION
0	2/25/19	RFC

ISSUE RECORD

RFC SUBMITTAL
BU-22 - NORFOLK SOUTHERN BRIDGE OVER OH-10
...\Sheets\010_2039c_SL602.dgn 3/18/2019 1:45:31 PM ccummings

DESIGN AGENCY
Michael Baker INTERNATIONAL
1111 SUPERIOR AVE E., SUITE 2300, CLEVELAND, OH 44114

DESIGNED	DRAWN	REVIEWED	DATE
JCC	BAH	JWB	11/5/18
CHECKED	REVISED	STRUCTURE FILE NUMBER	
MKB		1801519	

RECORD PLANS

REINFORCING SCHEDULE (2 OF 3)
CUY-010-2039
NORFOLK SOUTHERN RAILROAD OVER OH-10

RECORD PLANS

CUY-IR490/SR010-2.09/19.28
PID No. 96833

RECORD PLANS

SUPERSTRUCTURE											
MARK	NUMBER TOTAL	LENGTH	WEIGHT (LBS.)	TYPE	DIMENSIONS						SER INC.
					A	B	C	D	E	R	
S501	288	30'-0"	9012	STR							
S502	264	15'-4"	4222	STR							
S503	264	23'-1"	6356	STR							
S504	12	19'-6"	244	STR							
S505	36	21'-4"	801	STR							
S506	260	7'-11"	2147	30	1'-6"	0'-7"	2'-6 3/4"	2'-3"			
S507	8	7'-11"	66	30	1'-6"	0'-7 1/4"	2'-6 3/4"	2'-3"			
S508	432	2'-10"	1277	STR							
S601	112	30'-0"	5047	16	29'-4"						
S602	224	12'-8"	4262	STR							
S603	114	27'-8"	4737	16	27'-0"						
S604	8	13'-5"	161	STR							
S605	8	28'-2"	338	STR							
S606	120	30'-0"	5407	STR							
S607	114	27'-0"	4623	STR							
	2	3'-1"			2'-5"						
S608	SER. OF	TO	447	16							3'-4 3/8"
	9	30'-0"			29'-4"						
	2	2'-5"									
S609	SER. OF	TO	429	STR							3'-4 3/8"
	9	29'-4"									
S610	4	6'-2"	37	STR							
S611	4	9'-10"	59	STR							
S612	4	26'-3"	158	STR							
S613	NOT	USED									
S614	4	22'-11"	138	STR							
S615	NOT	USED									
	4	4'-4"									
S616	SER. OF	TO	926	STR							3'-2 3/8"
	9	29'-11"									
S617	NOT	USED									
	4	6'-4"									
S618	SER. OF	TO	535	STR							3'-4
	6	23'-4"									
S619	NOT	USED									
	2	3'-1"			2'-5"						
S620	SER. OF	TO	360	16							3'-4 7/8"
	8	26'-11"			26'-3"						
	2	2'-5"									
S621	SER. OF	TO	344	STR							3'-4 7/8"
	8	26'-3"									
S622	252	9'-5"	3564	2	8'-0"	0'-5 1/2"	1'-4"				
S623	4	5'-5"	33	2	4'-0"	0'-5 1/2"	1'-4"				
		TOTAL:	55730	LBS.							

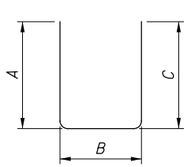

TYPE-2

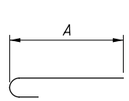

TYPE-16

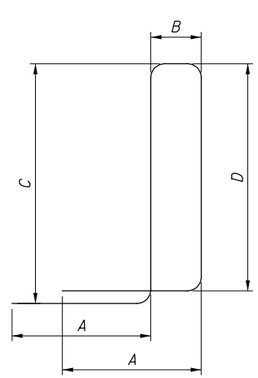

TYPE-30

NO.	DATE	DESCRIPTION
0	2/25/19	RFC

ISSUE RECORD

RFC SUBMITTAL
BU-22 - NORFOLK SOUTHERN BRIDGE OVER OH-10
...\Sheets\010_2039C_SL603.dgn 3/18/2019 1:45:40 PM ccummings

DESIGN AGENCY
Michael Baker INTERNATIONAL
1111 SUPERIOR AVE E., SUITE 2300, CLEVELAND, OH 44114

DESIGNED	DRAWN	REVIEWED	DATE
JCC	BAH	JWB	11/5/18
CHECKED	REVISED	STRUCTURE FILE NUMBER	
MKB		1801519	

RECORD PLANS

REINFORCING SCHEDULE (3 OF 3)
CUY-010-2039
NORFOLK SOUTHERN RAILROAD OVER OH-10

RECORD PLANS

CUY-IR490/SR010-2.09/19.28
PID No. 96833

RECORD PLANS

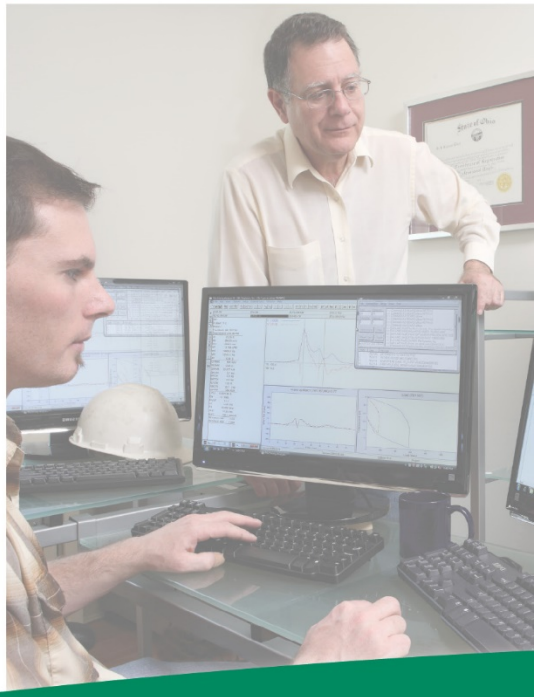

Job No. 195067-3

Report on: Thermal Integrity Profiling

Project: Opportunity Corridor 3 CUY-10-2039

Cleveland, OH

Prepared for: Kokosing Constuction Company

By: Benjamin White, P.E.

December 11, 2019

GRL engineers, inc.

Dynamic Measurements and Analyses

www.GRLengineers.com info@GRLengineers.com

December 11, 2019

Mr. Marty Fritz
Kokosing Construction Company
886 McKinley Ave.
Columbus, OH 43222

Re: Thermal Integrity Profiling Report
Project: Opportunity Corridor 3 Bridge CUY-10-2039 – Pier 1 Shafts – Phase 1
Cleveland, OH

GRL Job No. 195067-3

Mr. Fritz:

This report presents the results of Thermal Integrity Profiling (TIP) using Thermal Wire® cables for the above-referenced project. The objective of TIP testing was to assess the integrity of four drilled shafts at the pier location of the CUY-10-0239 structure which carries OH-10 over the Norfolk Southern RR. The TIP data summarized in this report was recorded between December 2nd and 4th, 2019.

THERMAL INTEGRITY PROFILING – INSTRUMENTATION AND ANALYSIS

Thermal Integrity Profiler (TIP) testing was performed by means of Thermal Wire® cables and Thermal Acquisition Ports (TAPs). The TIP system, manufactured by Pile Dynamics, Inc. in association with FGE, reads concrete temperatures during curing using cables embedded in the concrete.

The Thermal Wire cables consist of temperature sensors spaced every foot along the length of a cable. For these shafts, four Thermal Wire® cables were attached along the full length of the reinforcing cage. After the concrete placement was complete, a TAP-EDGE data logger was connected to each wire and data acquisition began.

During curing of the concrete, the hydrating cement generates heat, increasing the temperature in the shaft. Every 15 minutes the TAP-EDGE data loggers automatically record the measured temperature at each sensor location along the length of the wire, generating a profile of temperature versus depth at each increment of time. The data is then sent to a cloud server where GRL can access the data. After the concrete peak temperature has been achieved, the data is downloaded for further analysis.

The TIP results may be evaluated for shaft shape and integrity, concrete quality, and for location of the reinforcing cage. The overall average temperature for all Thermal Wire readings over the embedded depths can be directly related to the overall volume of concrete installed. Pile integrity may be assessed based on the average temperature measurements from each Thermal Wire at each depth increment. If the measured average temperature versus depth is consistent, the shaft is considered to be uniform in shape and quality. Bulges can be identified as localized increases in average temperature, while insufficient concrete quality or cross section reductions can be identified as localized decreases in average temperature. Anomalies present over more than ten percent of the effective cross-sectional area are normally seen in multiple Thermal Wires at the same depth. Because soil and/or slurry pockets produce no heat, areas of soil intrusion or inclusion are indicated by lower local temperatures.

Appendix A provides additional information regarding the technical background and implementation of the TIP drilled foundation integrity testing method.

SHAFT DETAILS

Please refer to the construction records for complete details.

GRL Engineers was provided shaft information through field logs which are attached in Appendix C for reference. The reported shaft lengths and details are summarized in Table 1.

Table 1. Reported Shaft Installation Details

Shaft Number	Concrete Placement Date	As-Built Shaft Diameter Shaft/socket (in)	Rebar Cage Diameter (in)	Reported Total Shaft Length (ft)	Concrete Volume Input for Analysis (yd^3)
19	12/3/19	48/48	36	41.07	21.0
20	12/4/19	48/48	36	41.5	21.0
21	12/3/19	48/48	36	42.37	21.0
22	12/2/19	48/48	36	41.3	20.5

RESULTS

TIP results for the tested shaft include the measured temperature and calculated effective radius versus depth. The effective radius calculations were based on the measured Thermal Profile and the input concrete volume. The measured Thermal Profiles present the measured temperature versus depth for each active sensor at the selected time interval.

The optimal time selected for the pile profile corresponds approximately to near the time when the maximum temperature occurs. The time to near peak temperature and also the time selected for analysis for these shafts was approximately 14 to 16 hours after placement. In general, temperature variations of +/- .9 degrees Fahrenheit are within normal range for TIP results due to the accuracy of the sensors. Anomalies would be indicated by abrupt reductions in temperature at a particular depth.

The TIP results are presented in Appendix B. The top left plot present the Measured Temperature (degrees Fahrenheit) vs. Depth (feet). Temperature roll-off at the bottom of a shaft is caused by heat loss due to the concrete/soil interface. Temperature roll-off at the top of pile is caused by heat loss due to the concrete/air interface. The top right plot displays the Estimated Effective Radius (inches) vs. Depth (feet). The bottom right plot displays a 2-D interpretation of the shaft. The rebar cage is displayed as a 2-D color spectrum with an overlay of projected pile exterior surface. The bottom left figure is a general soil profile with a 2-D shaft exterior overlay.

GRL has interpreted and categorized the results employing the following criteria:

- **Satisfactory** **(S)** 0 to 6% Effective Average Radius Reduction and Cover Criteria Met
- **Anomaly** **(A)** Effective Average Radius Reduction > 6% (Max Red %) **or** Cover Criteria Not Met (Further Evaluation Required)

When a tested shaft is deemed Anomaly (A), slices modeled at the area of question may be provided so that a structural evaluation of the shaft can be performed prior to implement any corrective measurements.

Shaft 19

The temperature profile for this shaft indicates a fairly constant temperature throughout the shaft with the measured temperature slightly cooling within the rock socket. The temperature roll offs at the top and bottom appear consistent with the shaft radius.

Based on the thermal integrity profiling results the effective radius is generally slightly oversized throughout the uncased portion above the rock socket. The effective radius in the rock socket is generally consistent with the design radius.

The rebar cage appears to be fairly well centered and the concrete cover generally exceeds 3 inches along the length of the shaft.

No data was received for wire number 4 in this shaft. Each wire is checked prior to shaft installation, however, data was not transmitted after concrete placement. The remaining 3 wires provided reliable data and we feel the integrity of this shaft can be evaluated from this data.

The overall thermal signature, based on the Temperature (degrees Fahrenheit) vs. Depth (feet) graph indicates the shaft is continuous with no reductions in the temperature indicative of major anomalies observed over the tested length. Based on the rating criteria noted above, this pile was categorized as **Satisfactory (S).**

Shaft 20

The temperature profile for this shaft indicates a fairly constant temperature throughout the shaft with the measured temperature slightly cooling within the rock socket. The temperature roll offs at the top and bottom appear consistent with the shaft radius.

Based on the thermal integrity profiling results the effective radius is generally slightly oversized throughout the uncased portion above the rock socket. The effective radius in the rock socket is generally consistent with the design radius.

The rebar cage appears to be shifted slightly to the North as wire 1 indicates generally higher temperatures and wire 4 indicated generally lower temperatures. The concrete cover generally is very close to or exceeds 3 inches along the length of the shaft.

The overall thermal signature, based on the Temperature (degrees Fahrenheit) vs. Depth (feet) graph indicates the shaft is continuous with no reductions in the temperature indicative of major anomalies observed over the tested length. Based on the rating criteria noted above, this pile was categorized as **Satisfactory (S).**

Shaft 21

The temperature profile for this shaft indicates a fairly constant temperature throughout the shaft with the measured temperature slightly cooling within the rock socket. The temperature roll offs at the top and bottom appear consistent with the shaft radius.

Based on the thermal integrity profiling results the effective radius is generally slightly oversized throughout the uncased portion above the rock socket. The effective radius in the rock socket is generally consistent with the design radius.

The rebar cage appears to be fairly well centered and the concrete cover generally exceeds 3 inches along the length of the shaft.

No data was received for wire number 1 in this shaft. Each wire is checked prior to shaft installation, however, data was not transmitted after concrete placement. The remaining 3 wires provided reliable data and we feel the integrity of this shaft can be evaluated from this data.

The overall thermal signature, based on the Temperature (degrees Fahrenheit) vs. Depth (feet) graph indicates the shaft is continuous with no reductions in the temperature indicative of major anomalies observed over the tested length. Based on the rating criteria noted above, this pile was categorized as **Satisfactory (S).**

Shaft 22

The temperature profile for this shaft indicates a fairly constant temperature throughout the shaft with the measured temperature slightly cooling within the rock socket. The temperature roll offs at the top and bottom appear consistent with the shaft radius.

Based on the thermal integrity profiling results the effective radius is generally slightly oversized throughout the uncased portion above the rock socket. The effective radius in the rock socket is generally consistent with the design radius.

The rebar cage appears to be fairly well centered and the concrete cover generally exceeds 3 inches along the length of the shaft. Wire 4 indicates as little as 2 inches of cover, but only over the bottom foot of the shaft.

The overall thermal signature, based on the Temperature (degrees Fahrenheit) vs. Depth (feet) graph indicates the shaft is continuous with no reductions in the temperature indicative of major anomalies observed over the tested length. Based on the rating criteria noted above, this pile was categorized as **Satisfactory (S).**

ADDITIONAL CONSIDERATIONS

Uncertainties in the interpreted TIP results include calculated corrections for pile top and bottom shape which depend on the air and the annual average soil temperature, respectively. Other factors include variations in the thermal diffusivity of the soil around the pile and the reinforcing cage which may have undergone movement during concrete placement. Furthermore, inaccuracies in the observed, installed concrete volumes may cause errors in calculated radii and 3-D pile shape interpretations. These factors limit the direct, unquestioned use of the results presented in this report for pile suitability. We recommend that the responsible engineer(s) use the TIP results in conjunction with the soil borings, pile construction/inspection records, results from other test methods, and foundation loading information to determine foundation acceptability with respect to design requirements.

We appreciate the opportunity to be of assistance to you on this project. Please contact us if you have any questions regarding this report, or if we may be of further service.

Sincerely,
GRL Engineers, Inc.

Benjamin White, P.E.

C. Michael Morgano, P.E.

Appendix A: Thermal Integrity Profiling

1.1 Test Method Overview

The Thermal Integrity Profiler (TIP) uses the temperature generated by curing cement (hydration energy) to assess the quality of cast in place concrete foundations (i.e. drilled shafts, Auger-cast-in-place (ACIP) or Continuous flight auger (CFA) piles). Whereas other methods of integrity testing have limits in assessing the full cross-section or length (Cross-Hole Sonic Logging (CSL): inside the reinforcing cage, or Gamma-gamma Logging (GGL): within 3 inches (75mm) of access tube: Pile Integrity Testing (PIT): length limits or after major section changes), TIP measurements evaluate the concrete quality from all portions of the cross-section along the entire length.

In general, a shortage of competent concrete is registered by relative cool regions (e.g. necks or inclusions); the presence of extra concrete is registered by relative warm regions (e.g. over-pour bulging into soft soil strata).

Anomalies both inside and outside the reinforcing cage not only disrupt the temperature signature near the anomaly, but also at more distant locations at progressively less effect.

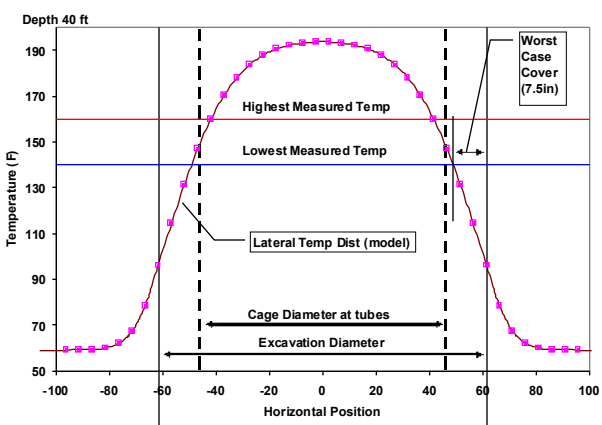

Figure A: Temperature distribution for 10 ft (3.03 m) diameter shaft. Lowest temperature measured corresponded to a 7.5 in (19 cm) cover

The shaft temperature is dependent on the shaft diameter, mix design, and the time of measurement.

Because the temperature distribution within a shaft is bell-shaped with respect to radial position (Figure A), the measurements are sensitive to cage eccentricity as well as the surrounding cover. A cage closer to one side of the excavation exhibits cooler temperatures than average when the cage is closer to the soil. When the cage is closer to the shaft center, temperatures are then warmer.

Since the diameter and temperature relationship is strongly linear in the region of the cage, a plot of the average temperature of the entire cage versus depth mimics the actual shape of the shaft as determined from field concreting logs. Use of construction and concreting logs can be used in concert with the TIP data to better assess the overall quality of a given shaft (Figure B).

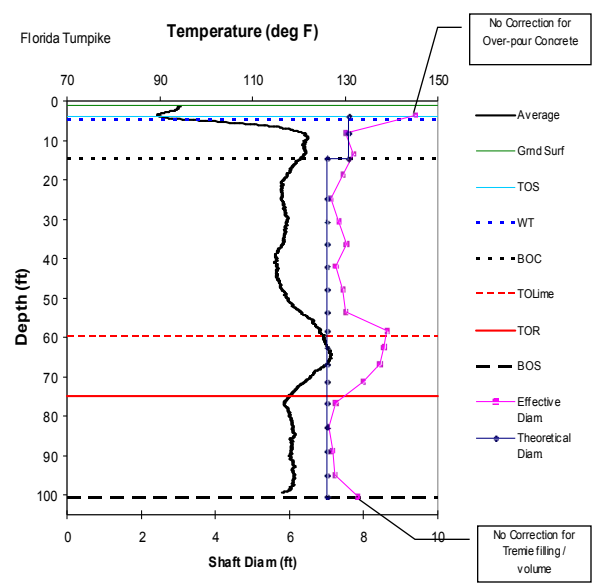

Figure B: Average shaft temperature (black) and effective diameter computed from concreting log (pink with square markers)

1.2 Data Collection

TIP data is obtained either using probes in access tubes or using embedded THERMAL WIRES®.

Figure C: Thermal Integrity Profiling (Probe method).

1.2.1 The TIP system – Probe method

The TIP probe uses four orthogonally oriented infrared sensors within a single thermal probe (Figure D) to measure the inside wall temperature of standard 1.5 or 2.0 inch (38 or 50 mm) access tubes (plastic or steel). Four sensors provide redundancy. The probe diameter is 1.25 inches (32 mm)

Figure D: 5 in. long by 1.25 in. diameter Thermal Probe with four infrared sensors

A depth-encoder attached to the access tube tracks the probe location as it is lowered by the engineer for the entire length of each tube (access tubes must be free of water debris and other liquids during testing). The temperature data are collected typically 12 to 48 hours after concrete casting, depending on shaft diameter and concrete mix. TIP results are insensitive to de-bonding.

1.2.2 The TIP system – Thermal Wire method

The embedded sensor method uses wires with thermal sensors attached to the reinforcing cage (Figure E). No access tubes are required. Data is automatically sampled at specified intervals (generally every 15 minutes) from each embedded THERMAL WIRE cable by a battery powered Thermal Acquisition Port (TAP) allowing the concrete curing process to be monitored. Data can be collected on site at any time after casting for evaluation. A single embedded wire is attached to a center rebar for smaller augercast (CFA) piles, soil nails, micropiles and jet-grouted applications.

Figure E: Embedded THERMAL WIRE cable attached to rebar cage (shown adjacent to CSL access tubes.)

Should an anomaly be detected (local relatively cool spot) by either probes or embedded THERMAL WIRE cables, no additional field data is necessary to perform complete in-depth analyses.

1.3 Data Analysis

Field measurements alone highlight glaring irregularities since the average temperature profile shows the general shaft shape. This level of simple review reveals cage alignment irregularities, casing location, locations of over-pour bulges or necking or deficient concrete, and can easily alert the user or an owner of areas of concern.

Superposition of construction and concreting logs can calibrate the average diameter to the overall average temperature, particularly when multiple concrete trucks per pile are used.

Finally, the measured temperatures when converted to radius can be used to provide a 3-D rendering (Figure F) of the as-built shaft as well as 2-D slices (Figure G) of the shaft cross section at any depths of interest and vertical slices through any radial orientation.

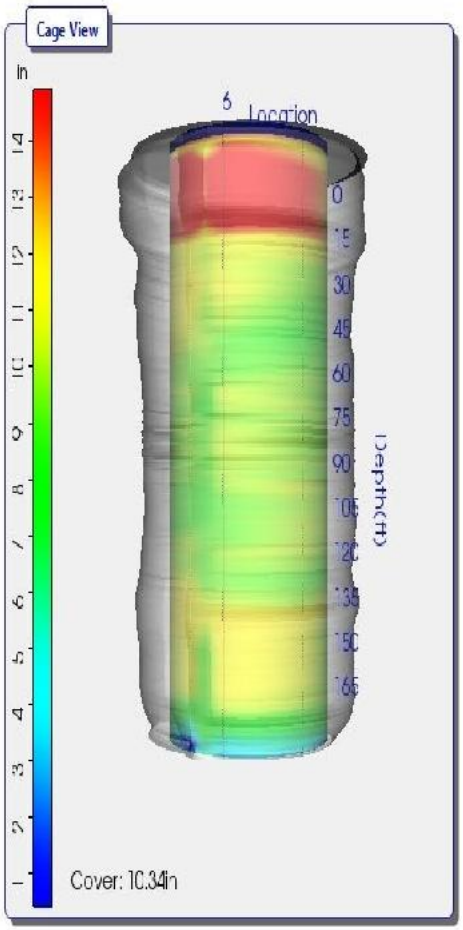

Figure F: 3-D projection of shaft

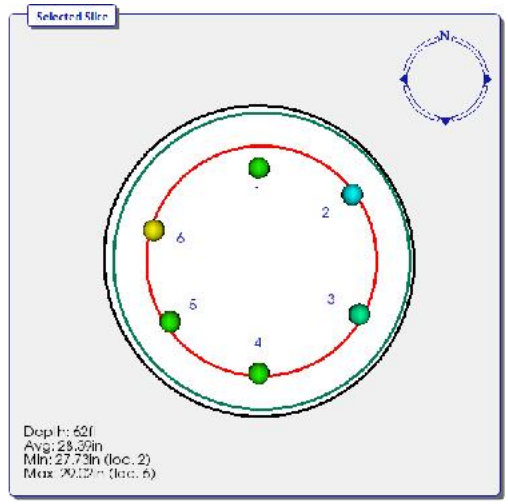

Figure G: horizontal 'slice' of the shaft

1.3.1 Roll-off Modelling

The TOS/BOS Correction window allows the user to model the 'roll-off' observed typically at the top and bottom of the shaft. Note that for a majority of the shaft the heat is dispersed only in the radial direction, however for a length corresponding to one diameter at both the upper and lower portion of the shaft, or any large diameter change, the heat is dispersed not just in a radial pattern, but also in a longitudinal direction. This occurs because the heat is not just conducted into the laterally surrounding soil but also, for the top of shaft, radiates into the ambient air; and for the bottom of shaft, into the soil beneath the shaft. Because of this, proper analysis and interpretation of Thermal Integrity results requires a correction for this region of the shaft where the temperatures are non-linear. It should be noted that the surrounding soil receives the heat that the shaft radiates and thus becomes warm. The soil is warmest at the shaft interface and gradually cools as the radial distance from the shaft center increases.

The roll-off at the shaft ends for a uniform shaft follows a hyperbolic tangent curve. If we superimpose this curve on the measured temperature curve in the roll-off zone, the difference between these curves is then due to differences in the actual shaft shape relative to the uniform cylindrical shape, allowing us to compute the estimated actual shape.

Corrections made at the top and bottom of the shaft will estimate the region of non-linear temperatures due to the roll-off by applying an estimated curve based of the ambient soil temperature, ambient air temperature, and average concrete temperature. Note that roll-off correction is a 'best-fit' correction.

1.3.2 Effective Radius

In many cases, simple presentation of the temperatures versus depth may be satisfactory. For example, the total installed volume is known to be substantially greater than the theoretical neat volume of the hole (nominal area times nominal length) and the temperature profiles are relatively uniform, with normal top and bottom temperature roll-off observed.

If unusual features are observed in the data (local cool temperatures or significant cage shifts, or if project specifications require, then further analysis is generally performed to obtain an "***effective radius***" versus depth versus quadrant. The "***effective radius***" is "expected" to be the designed shaft radius which may actually be the radius of the tool or the radius of a casing. As the measured temperature is proportional to the local radius and cover, such a correlation is produced to estimate the effective radius from temperature measurements and the total volume of placed concrete. The term "***effective radius***" was coined to address the scenario where concrete quality may be varying instead of shaft shape. To that end, ***effective radius is defined as that radius of intact uncompromised concrete that would produce the measured temperature***.

In order to properly interpret data into an "***effective radius***" presentation, a significant amount of information should be gathered. Thermal data is collected into the TIP main unit and includes the thermal arrays and descriptions of geometries (nominal radius, nominal cage radius, spacing between measurement locations, etc.)

Other pertinent information would include soil borings, Thermal field logs, drilling logs that would include any pertinent diameter changes, casing lengths (permanent or temporary), and any unusual occurrences, and logs of concrete placement (preferably vs depth). If the shaft extends above the ground or is cased through water zone, these affect this cooling of the upper portion of the shaft, and therefore data interpretation. It should be noted that the diffusivity of heat transfer in the soil is relatively unaffected by the soil type or water table as the heat generation is significantly higher and drives the process (at least through the temperature rise portion of the heating and cooling cycle). Obviously the more information available the better qualified the result answer that can be achieved.

1.4 Disclaimer

As Thermal Integrity Profiling is based on the heat generated during the concrete hydration process, the test method is then highly dependent on acquiring data early in the hydration process, generally slightly before or after the point in time the shaft reaches peak heat. The point in time which peak heat occurs is dependent on actual shaft diameter and actual concrete mix design.

As with most Non-Destructive methods of pile material testing, results are not always a clear indication of the strength of a shaft. A variety of error sources or limitations can mask some of the defects while exaggerating others. It is therefore suggested that the TIP results are always used together with other records of shaft installation and that they are not used as the sole basis for shaft rejection or shaft acceptance.

As 'Roll-off' regions in the shaft are subject to ambient atmospheric conditions as well as ambient soil temperatures, the modelling is dependent on the accuracy of such information. Additionally, where the bottom 'roll-off' occurs is dependent on where the lowest thermal measurement has occurred and the actual bottom of the shaft.

As the Effective Radius estimation is highly dependent on concrete volume measurements, the accuracy of the effective radius is thus equally dependent on those volume measurements. Shafts with little volume

information, particularly in the case of small and/or short shafts which may require concrete volumes less than one truck load, may have a tendency to over-predict the effective radius.

If Modelling of the concrete mix design is employed the results of such modelling are dependent on the accuracy of the information given and the actual mixture placed

Shafts with multiple or highly variable impedance (cross section) changes produce complex records which are difficult or impossible to analyze after the first major or second smaller reflection.

Lack or discontinuities in reinforcement cannot be detected

It should be noted, as with many other non-destructive test methods, that the method can only assess shaft integrity and makes no qualifications on the suitability of the shafts load carrying capacity.

1.5 Corrective Measures

A limited number of corrective measures are available when a defect is indicated by the TIP method. Such measures include:

•Static load testing to prove the shaft integrity to be adequate. This is often the most expensive alternate and not well suited for testing large numbers of shafts.

•Dynamic Load Testing (DLT) with a Pile Driving Analyzer® which would yield evidence of satisfactory shaft performance under the dynamic load, which is typically in the range of the shaft's service loads.

•If access tubes are installed in the shaft. Testing by CSL, if defects are located with the direct path of the access tube combinations, may confirm the presence of defect.

•Sonic Pulse Echo testing with the Pile Integrity Tester™ (PIT) as an additional method of non-destructive testing.

•Coring of the shaft. Besides yielding a concrete core, video cameras can be used in the cored hole for a visual inspection of the shaft concrete.

•Repair by grouting high strength reinforcement bars in the access tubes. This is only possible if the tubes are made of steel.

•Pressure grouting the shaft either by piercing the tubes or by cored access holes.

Appendix B: Thermal Integrity Profiling Results

Opportunity Corridor 3

Bridge CUY-10-2039 Norfolk Southern RR over OH-10

Pier 1 Shafts 19, 20, 21, 22

Thermal Integrity Profiling Results

Pier 1 Shaft 19

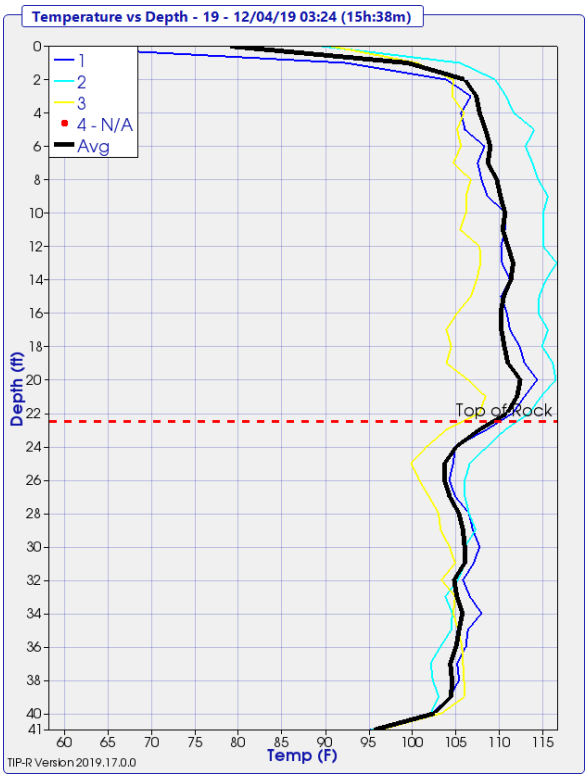

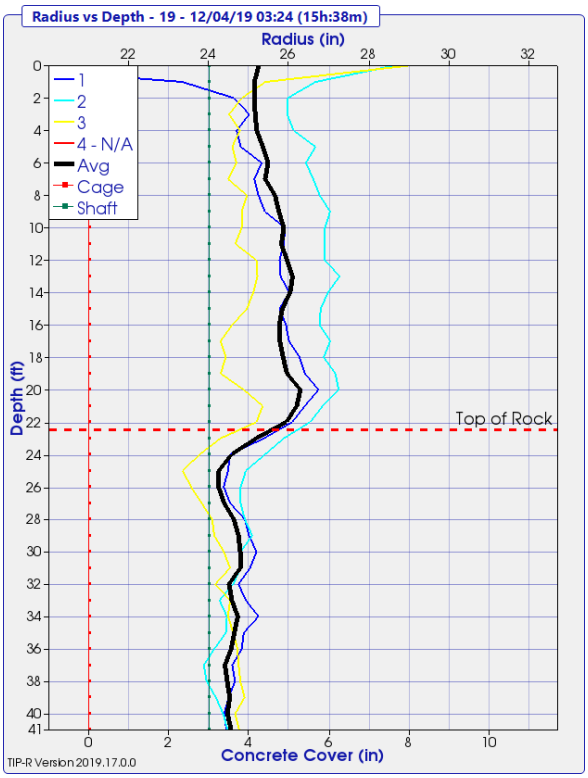

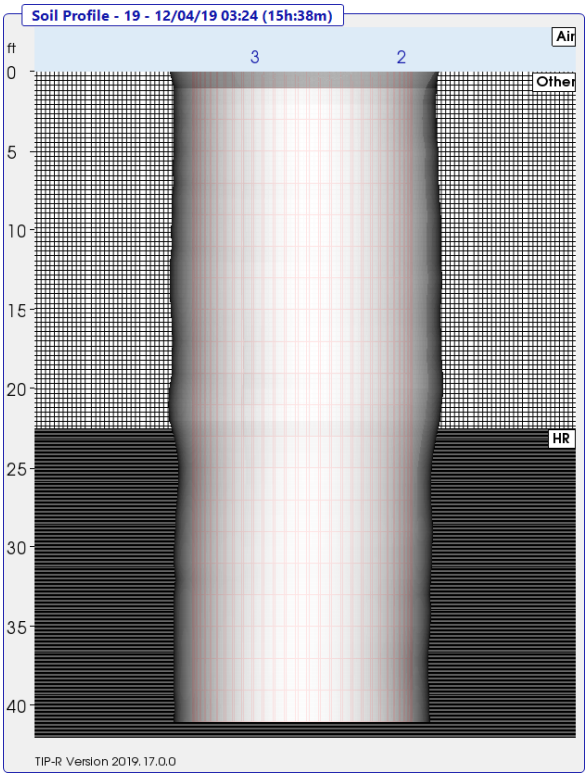

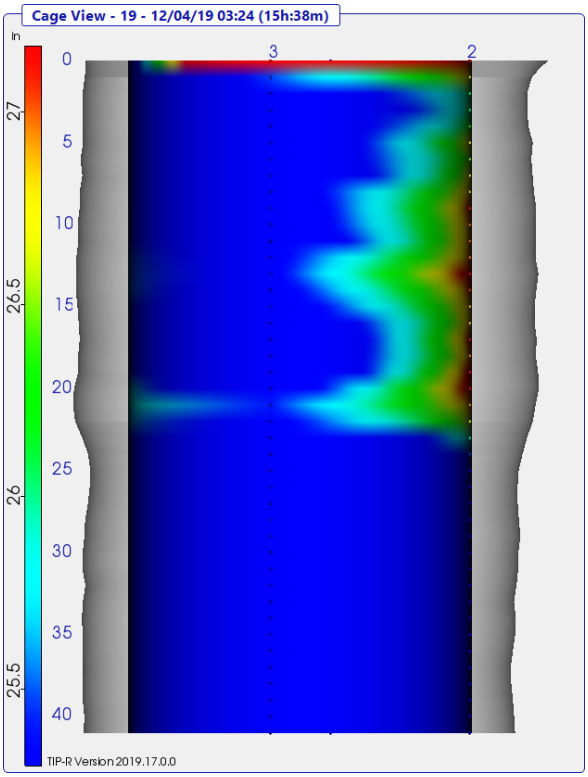

Pier 1 Shaft 20

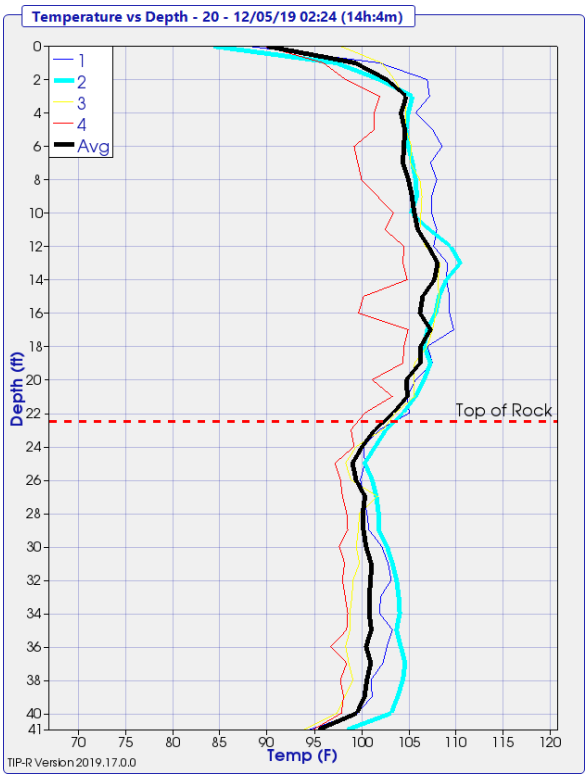

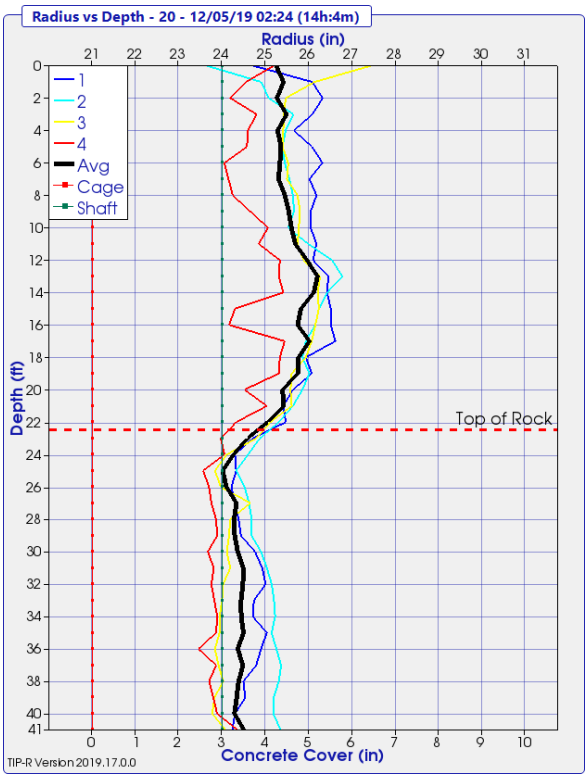

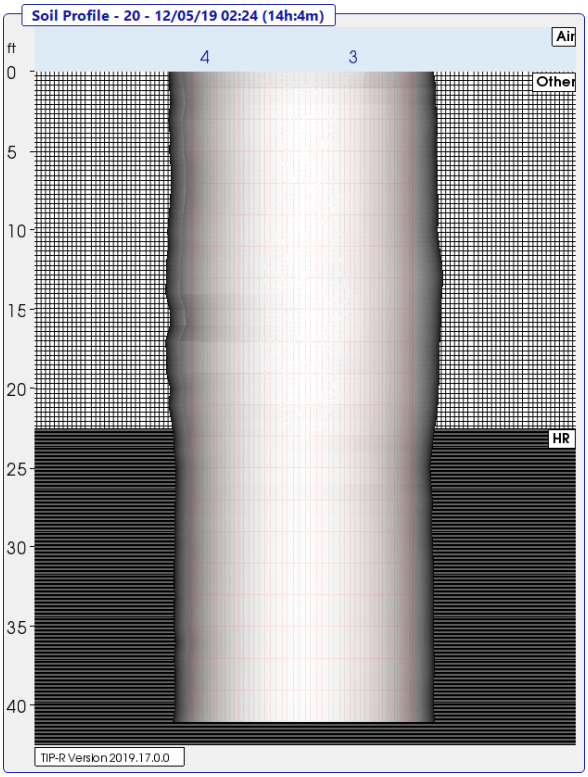

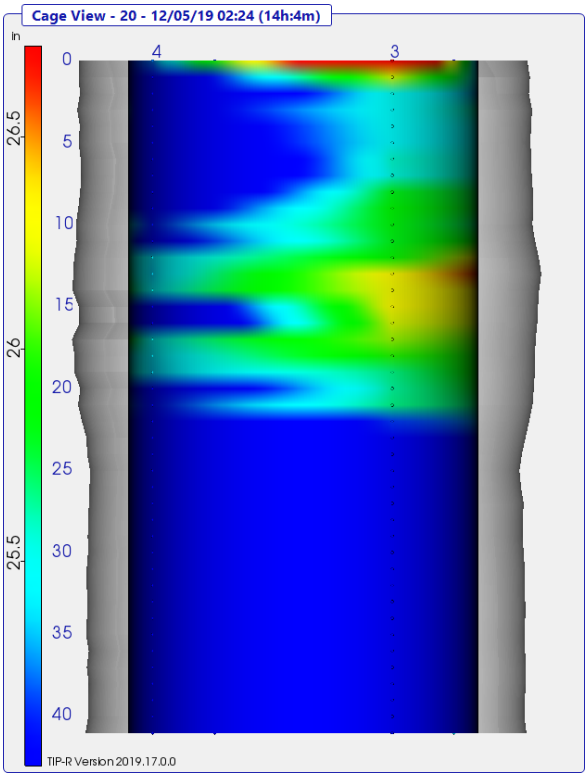

Pier 1 Shaft 21

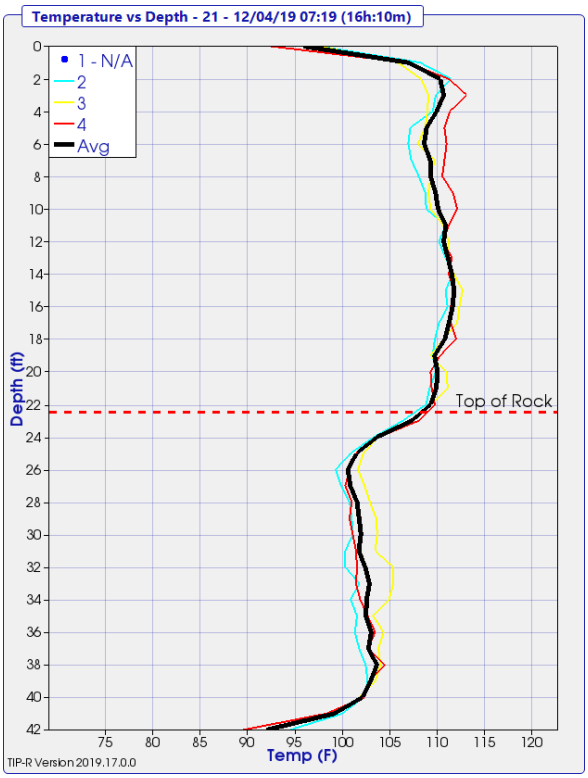

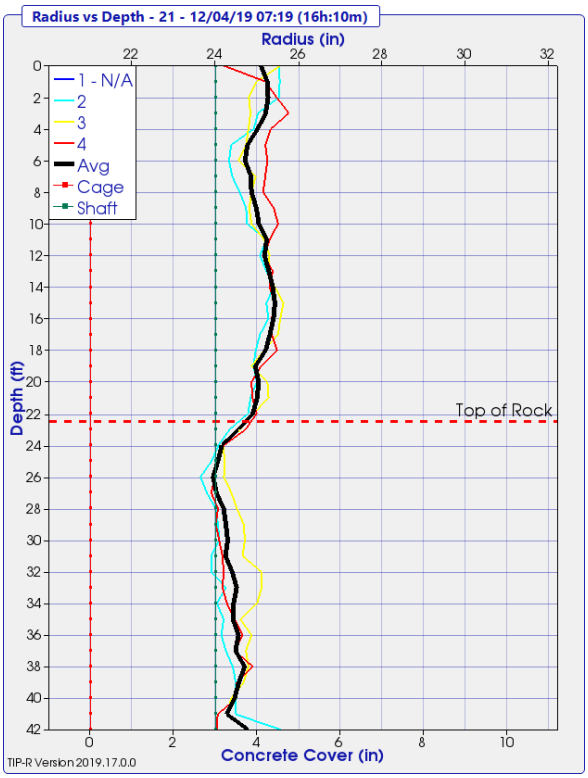

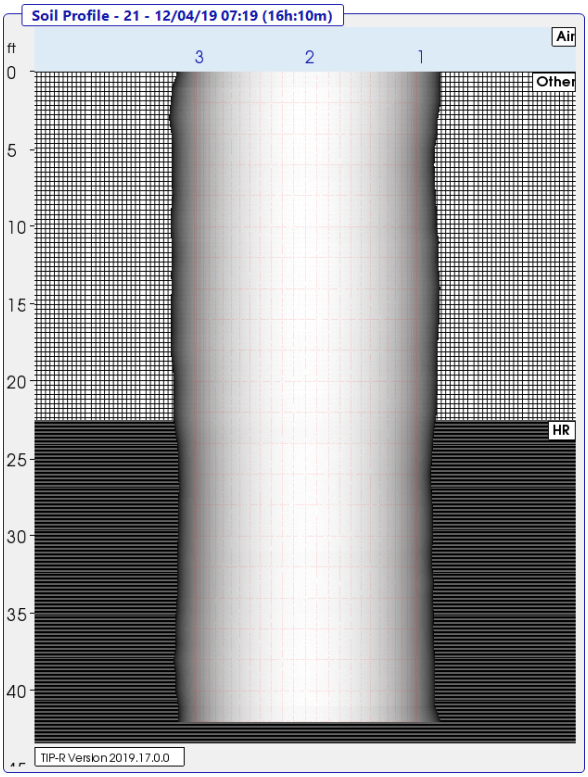

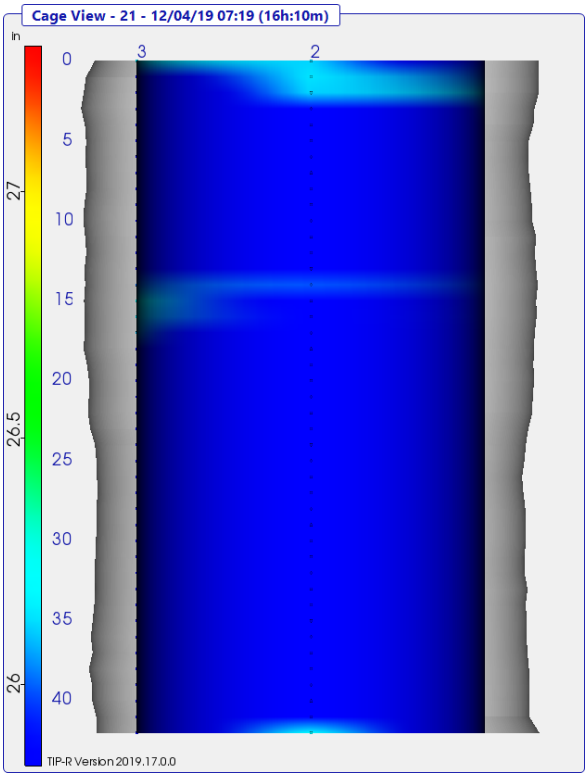

Pier 1 Shaft 22

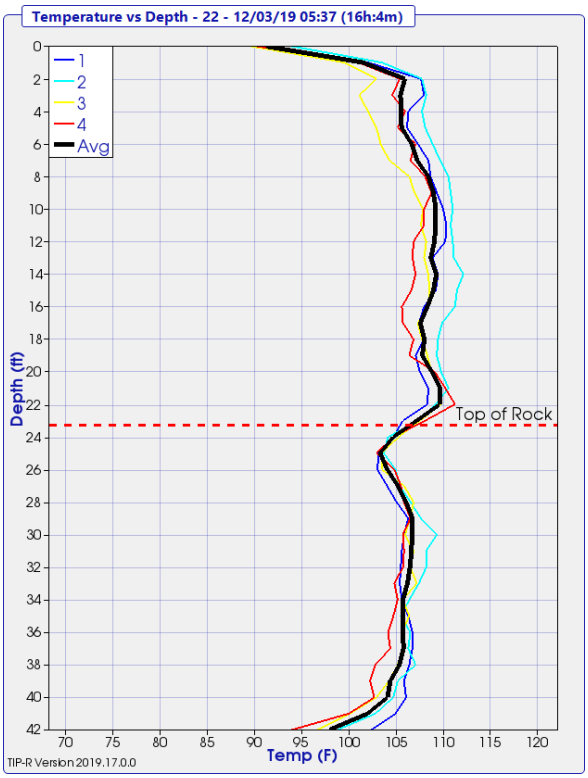

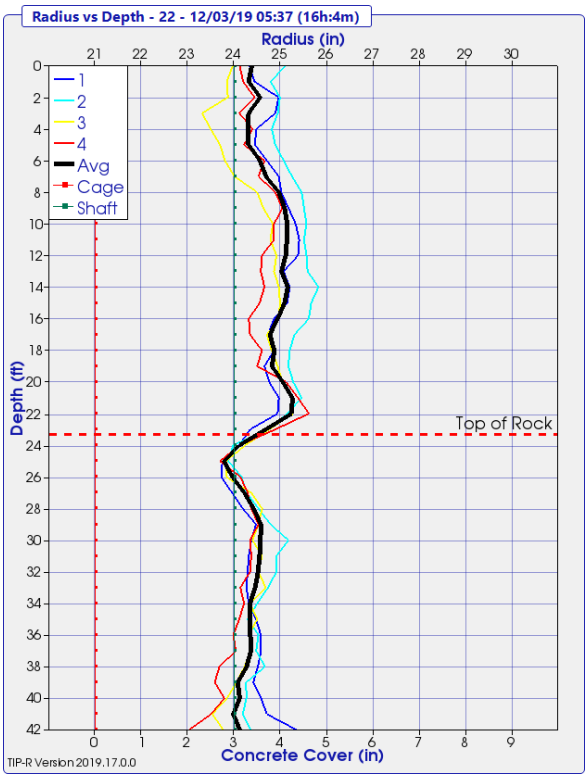

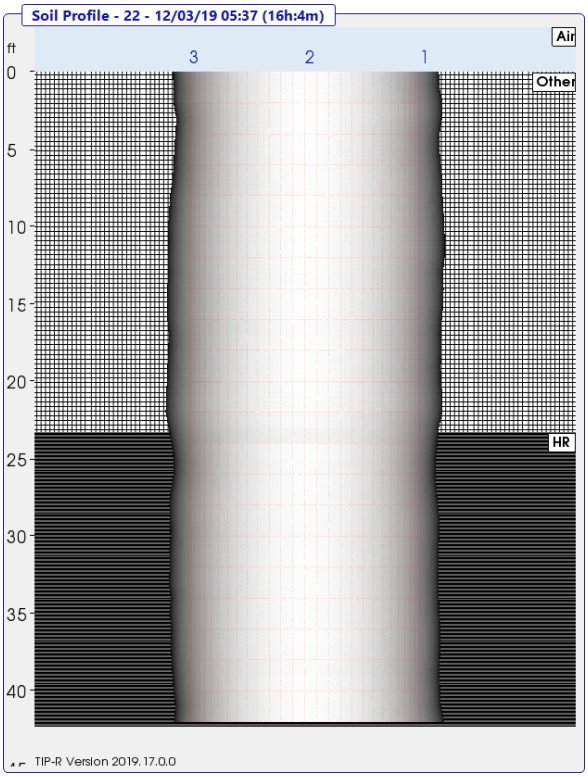

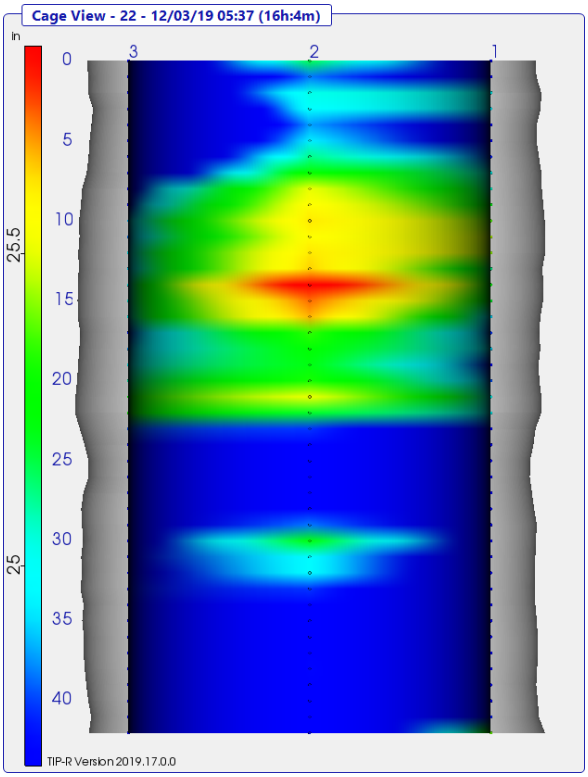

Appendix C: Thermal Field Logs

THERMAL FIELD LOG

Project: OC3
Pier No.: 1

Date Placed: 12/3/11
Shaft No.: 0519

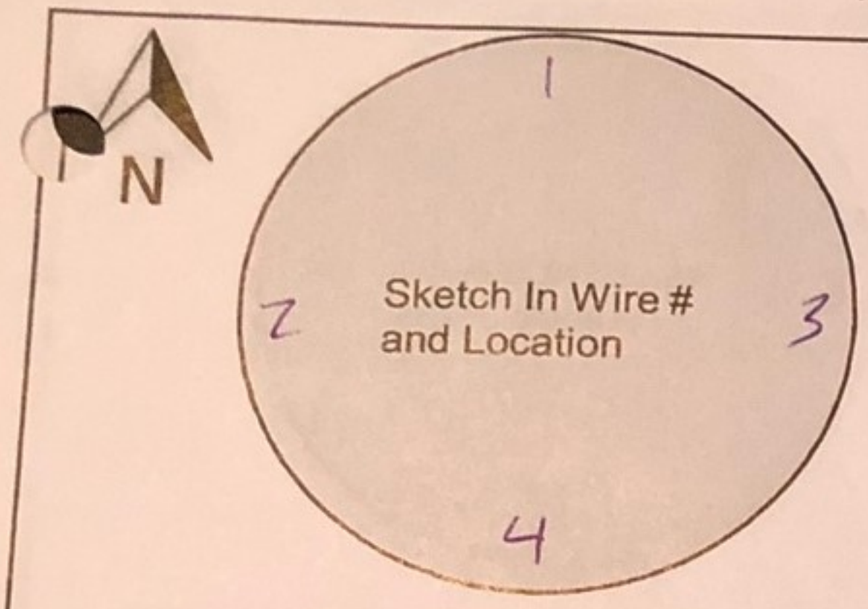

Wire #	Serial #	Wire Length (#nodes)	Nodes Above Concrete	Wire Tested After Install
1	45731	45	3	Yes
2	45741	45	3	Yes
3	45736	45	3	Yes
4	45732	45	3	Yes

Designate Northerly wire as #1

Wire-Wire Distance

1-3_____in. 2-3_____in. 4-3_____in.
2-1_____in. 4-1_____in.

Shaft Information

	Design	As-Built
Shaft Dia.	_____in.	48 in.
Shaft Length	_____ft.	41.07 ft.
Concrete Vol.	_____cy.	21 cy.
Cage Length	_____ft.	40.82 ft.
Cage Dia.	_____in.	_____in.
Casing Dia. (perm./temp.)	_____in.	48 ID in.
Casing Length	_____ft.	22.5 ft.
Rock Socket Dia.	_____in.	48 in.
Rock Socket Length	_____ft.	18.5 ft.

Elevation

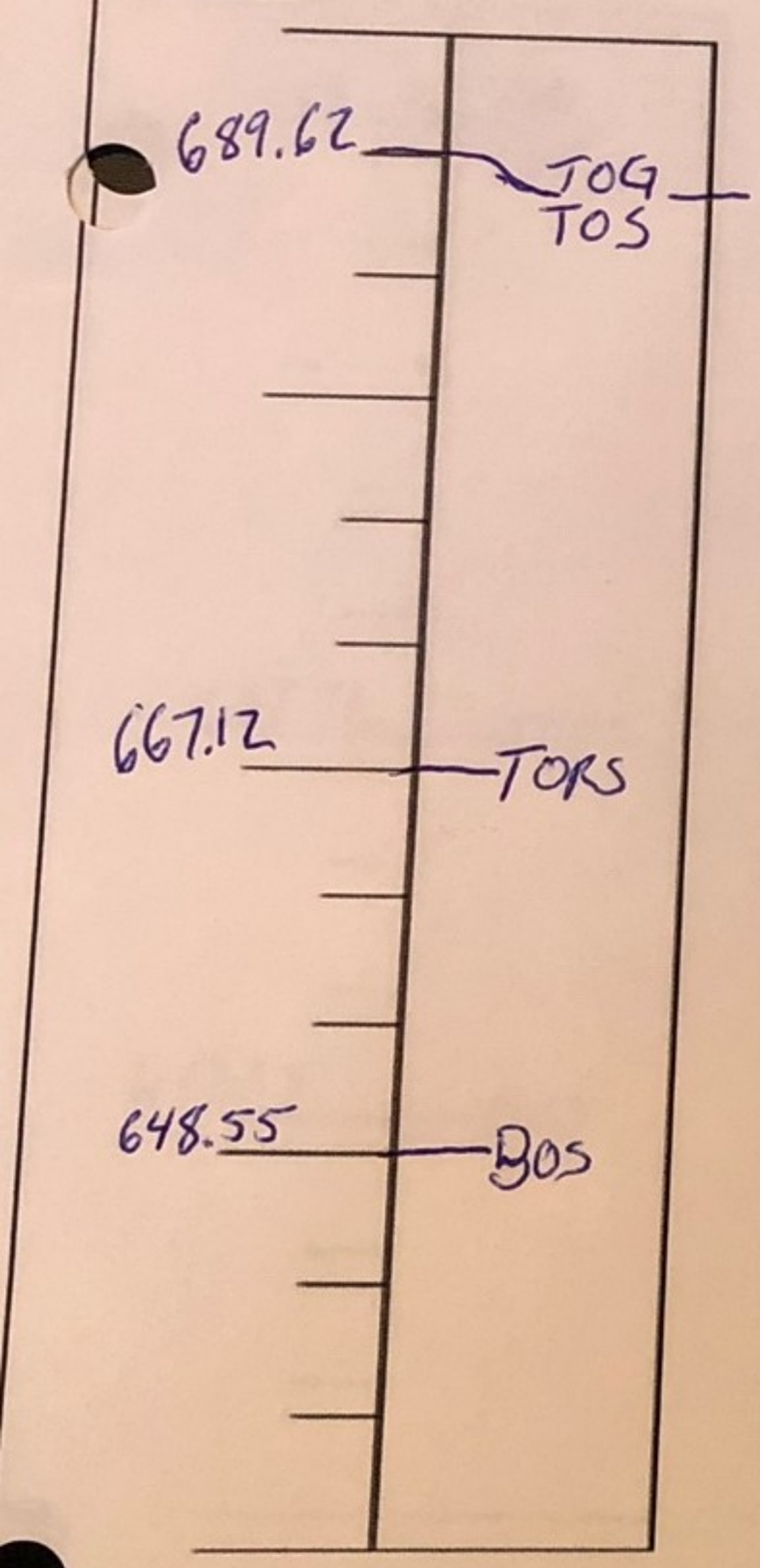

*** indicate changes in diameter**

Field Notes:

Start of Placement -
End of Placement -
Placement Method -

Legend

TOC	Top of Casing	BOC	Bottom of Casing
TOG	Top of Ground	BORC	Bottom of Reinf. Cage
TOS	Top of Shaft	BOS	Bottom of Shaft
TORS	Top of Rock Socket	▼	Water Level

Completed By: Adam Hawk

Please Submit with Concrete Placement Log and Installation Record

4 Wire - Shaft

THERMAL FIELD LOG

Project: OC3
Pier No.: ~~[illegible]~~ Pier 1

Date Placed: 12/4/19
Shaft No.: OS20

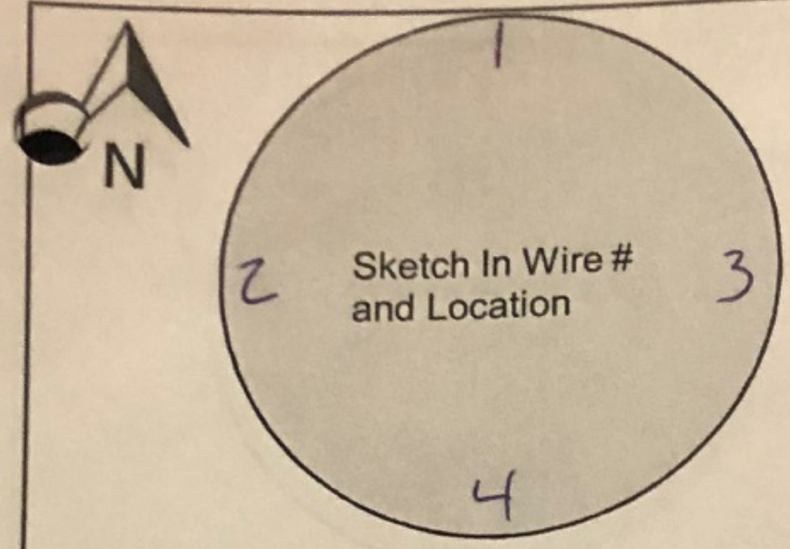

Wire #	Serial #	Wire Length (#nodes)	Nodes Above Concrete	Wire Tested After Install
1	13699	45	3	Yes
2	14463	45	3	Yes
3	13688	45	3	Yes
4	13794	45	3	Yes

Designate Northerly wire as #1

Wire-Wire Distance

1-3 ____ in.	2-3 ____ in.	4-3 ____ in.
2-1 ____ in.	4-1 ____ in.	

Shaft Information

	Design	As-Built
Shaft Dia.	____ in.	48" in.
Shaft Length	____ ft.	41.5 ft.
Concrete Vol.	____ cy.	21 cy.
Cage Length	____ ft.	40.75 ft.
Cage Dia.	____ in.	____ in.
Casing Dia. (perm./temp.)	____ in.	48 ID in.
Casing Length	____ ft.	22.5 ft.
Rock Socket Dia.	____ in.	48 in.
Rock Socket Length	____ ft.	19 ft.

Elevation

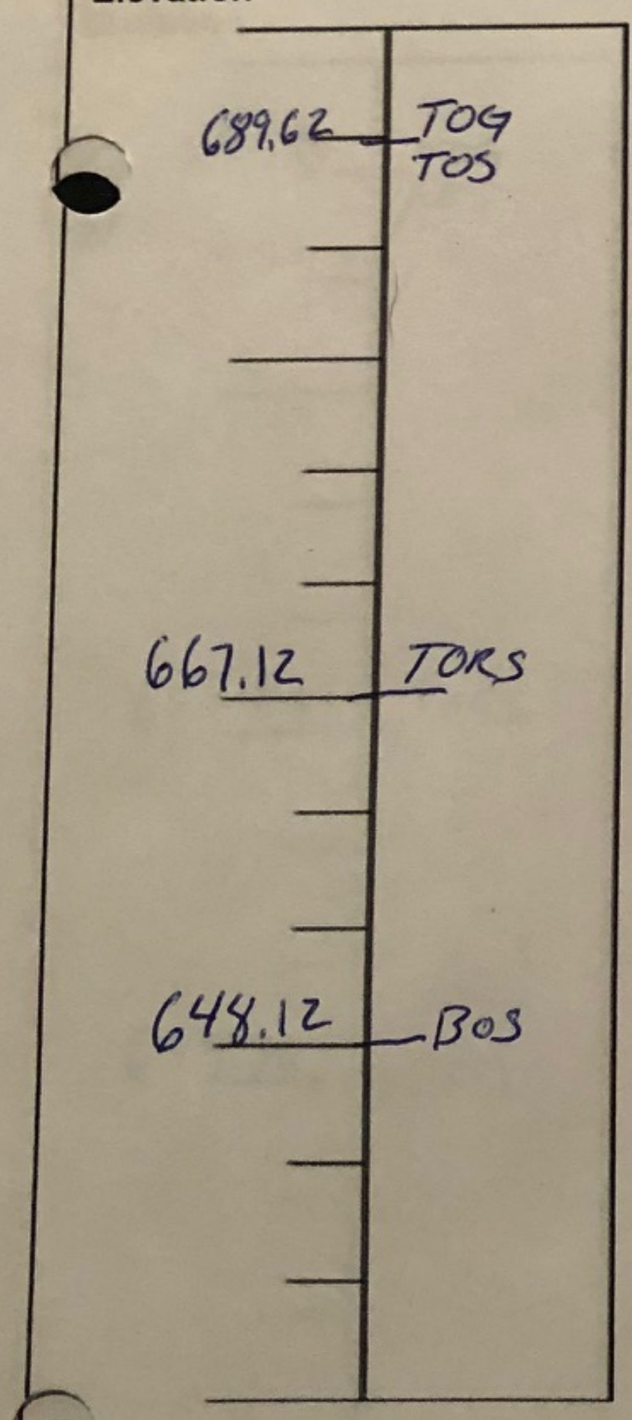

* indicate changes in diameter

Field Notes:

Start of Placement -

End of Placement -

Placement Method -

Legend

TOC	Top of Casing	BOC	Bottom of Casing
TOG	Top of Ground	BORC	Bottom of Reinf. Cage
TOS	Top of Shaft	BOS	Bottom of Shaft
TORS	Top of Rock Socket	▼	Water Level

Completed By: Adam Hawk

Please Submit with Concrete Placement Log and Installation Record

4 Wire - Shaft

THERMAL FIELD LOG

Project: OC3
Pier No.: 1

Date Placed: 12/3/19
Shaft No.: 21

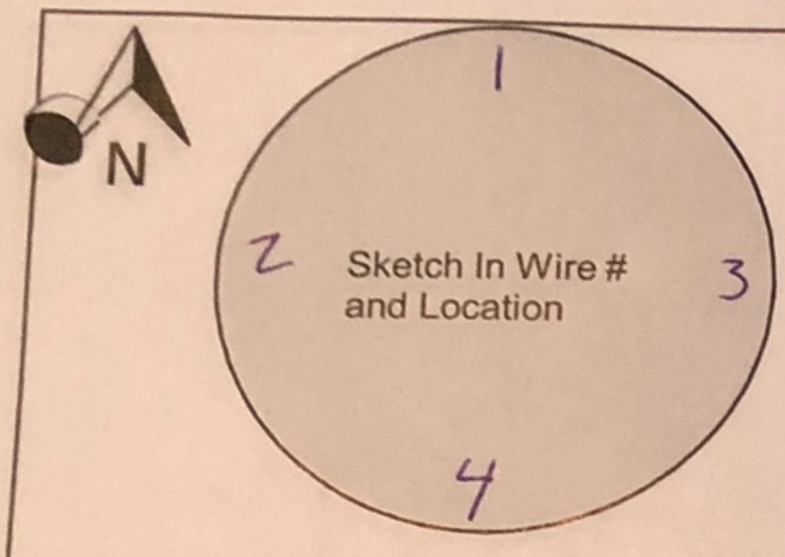

Wire #	Serial #	Wire Length (#nodes)	Nodes Above Concrete	Wire Tested After Install
1	~~#~~ 45739	45	2	Yes
2	45733	45	2	Yes
3	45742	45	2	Yes
4	45737	45	2	Yes

Designate Northerly wire as #1

Wire-Wire Distance

1-3 ____ in.	2-3 ____ in.	4-3 ____ in.
2-1 ____ in.	4-1 ____ in.	

Shaft Information

	Design	As-Built
Shaft Dia.	____ in.	48 in.
Shaft Length	____ ft.	42.37 ft.
Concrete Vol.	____ cy.	21 cy.
Cage Length	____ ft.	42.12 ft.
Cage Dia.	____ in.	____ in.
Casing Dia. (perm./temp.)	____ in.	48.10 in.
Casing Length	____ ft.	22.5 ft.
Rock Socket Dia.	____ in.	48 in.
Rock Socket Length	____ ft.	19.87 ft.

Elevation

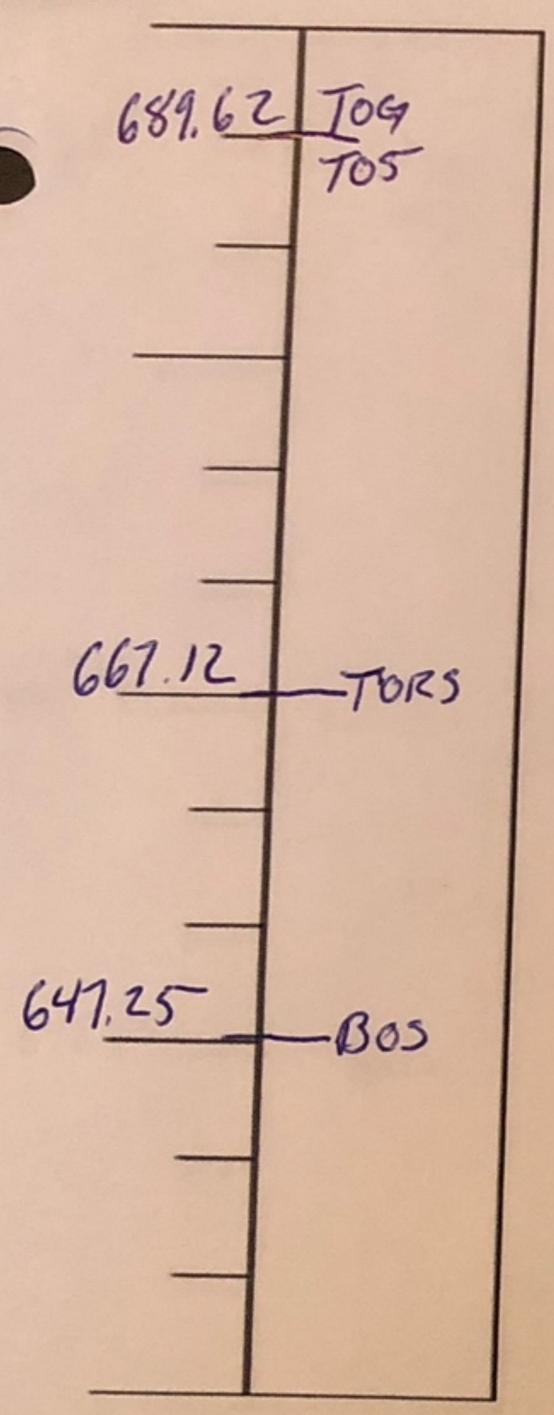

* indicate changes in diameter

Field Notes:

Start of Placement -

End of Placement -

Placement Method -

Legend

TOC	Top of Casing	BOC	Bottom of Casing
TOG	Top of Ground	BORC	Bottom of Reinf. Cage
TOS	Top of Shaft	BOS	Bottom of Shaft
TORS	Top of Rock Socket	▼	Water Level.

Completed By: Adam Hawk

Please Submit with Concrete Placement Log and Installation Record

4 Wire - Shaft

THERMAL FIELD LOG

Project: OC3
Pier No.: 1
Date Placed: 12/2/19
Shaft No.: 22

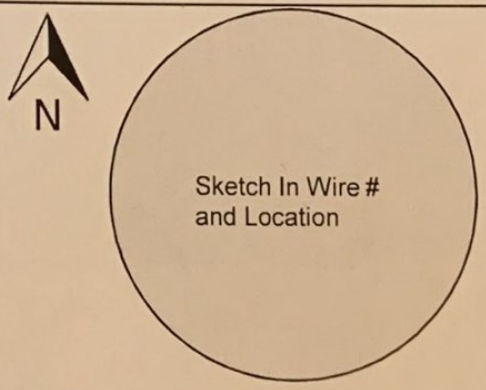

Wire #	Serial #	Wire Length (#nodes)	Nodes Above Concrete	Wire Tested After Install
1	13715	45		
2	13712			
3	13693			
4	13714			

Designate Northerly wire as #1

Wire-Wire Distance		
1-3 ____ in.	2-3 ____ in.	4-3 ____ in.
2-1 ____ in.	4-1 ____ in.	

Shaft Information	Design	As-Built
Shaft Dia.	____ in.	48 in.
Shaft Length	____ ft.	41.3 ft.
Concrete Vol.	____ cy.	____ cy.
Cage Length	____ ft.	____ ft.
Cage Dia.	____ in.	42 in.
Casing Dia. (perm./temp.)	____ in.	____ in.
Casing Length	____ ft.	23.3 ft.
Rock Socket Dia.	____ in.	____ in.
Rock Socket Length	____ ft.	18.0 ft.

Elevation

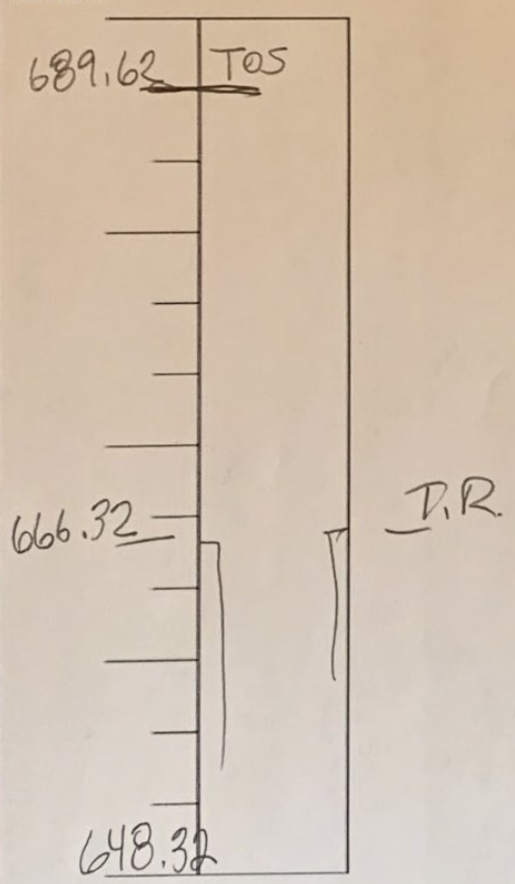

* indicate changes in diameter

Field Notes:
Start of Placement -
End of Placement -
Placement Method -

Legend

TOC	Top of Casing	BOC	Bottom of Casing
TOG	Top of Ground	BORC	Bottom of Reinf. Cage
TOS	Top of Shaft	BOS	Bottom of Shaft
TORS	Top of Rock Socket	▼	Water Level

Completed By: BAW - GRL

Please Submit with Concrete Placement Log and Installation Record

4 Wire - Shaft

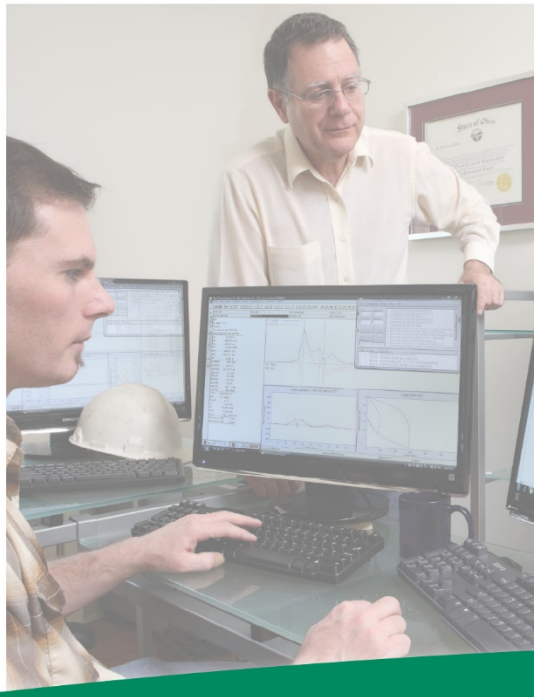

Job No. 195067-3

Report on: Thermal Integrity Profiling

Project: Opportunity Corridor 3 CUY-10-2039

Cleveland, OH

Prepared for: Kokosing Constuction Company

By: Benjamin White, P.E.
C. Michael Morgano, P.E.

January 14, 2020

GRL engineers, inc.
Dynamic Measurements and Analyses

www.GRLengineers.com info@GRLengineers.com

January 14, 2020

Mr. Marty Fritz
Kokosing Construction Company
886 McKinley Ave.
Columbus, OH 43222

Re: Thermal Integrity Profiling Report
Project: Opportunity Corridor 3 Bridge CUY-10-0239 – Forward Abutment – Phase 1
Cleveland, OH

GRL Job No. 195067-3

Mr. Fritz:

This report presents the results of Thermal Integrity Profiling (TIP) using Thermal Wire® cables for the above-referenced project. The objective of TIP testing was to assess the integrity of 11 drilled shafts at the pier location of the CUY-10-0239 structure which carries OH-10 over the Norfolk Southern RR. The TIP data summarized in this report was recorded between December 6th and 17th, 2019.

THERMAL INTEGRITY PROFILING – INSTRUMENTATION AND ANALYSIS

Thermal Integrity Profiler (TIP) testing was performed by means of Thermal Wire® cables and Thermal Acquisition Ports (TAPs). The TIP system, manufactured by Pile Dynamics, Inc. in association with FGE, reads concrete temperatures during curing using cables embedded in the concrete.

The Thermal Wire cables consist of temperature sensors spaced every foot along the length of a cable. For these shafts, four Thermal Wire® cables were attached along the full length of the reinforcing cage. After the concrete placement was complete, a TAP-EDGE data logger was connected to each wire and data acquisition began.

During curing of the concrete, the hydrating cement generates heat, increasing the temperature in the shaft. Every 15 minutes the TAP-EDGE data loggers automatically record the measured temperature at each sensor location along the length of the wire, generating a profile of temperature versus depth at each increment of time. The data is then sent to a cloud server where GRL can access the data. After the concrete peak temperature has been achieved, the data is downloaded for further analysis.

The TIP results may be evaluated for shaft shape and integrity, concrete quality, and for location of the reinforcing cage. The overall average temperature for all Thermal Wire readings over the embedded depths can be directly related to the overall volume of concrete installed. Pile integrity may be assessed based on the average temperature measurements from each Thermal Wire at each depth increment. If the measured average temperature versus depth is consistent, the shaft is considered to be uniform in shape and quality. Bulges can be identified as localized increases in average temperature, while insufficient concrete quality or cross section reductions can be identified as localized decreases in average temperature. Anomalies present over more than ten percent of the effective cross-sectional area are normally seen in multiple Thermal Wires at the same depth. Because soil and/or slurry pockets produce no heat, areas of soil intrusion or inclusion are indicated by lower local temperatures.

Appendix A provides additional information regarding the technical background and implementation of the TIP drilled foundation integrity testing method.

SHAFT DETAILS

Please refer to the construction records for complete details.

GRL Engineers was provided shaft information through field logs which are attached in Appendix C for reference. The reported shaft lengths and details are summarized in Table 1.

Table 1. Reported Shaft Installation Details

Shaft Number	Concrete Placement Date	As-Built Shaft Diameter Shaft/socket (in)	Rebar Cage Diameter (in)	Reported Total Shaft Length (ft)	Concrete Volume Input for Analysis (yd^3)
6	12/5/19	50/48	44	34.5	20
7	12/16/19	50/48	44	34.25	17
8	12/11/19	50/48	44	34.66	20
9	12/16/19	50/48	44	35.16	17
10	12/11/19	50/48	44	35.11	20
11	12/13/19	50/48	44	35.16	20
12	12/10/19	50/48	44	35.65	20
13	12/12/19	50/48	44	36.0	20
14	12/6/19	50/48	44	36.05	20
15	12/12/19	50/48	44	36.06	20
16	12/4/19	50/48	44	36.5	20.5

RESULTS

TIP results for the tested shaft include the measured temperature and calculated effective radius versus depth. The effective radius calculations were based on the measured Thermal Profile and the input concrete volume. The measured Thermal Profiles present the measured temperature versus depth for each active sensor at the selected time interval.

The optimal time selected for the pile profile corresponds approximately to near the time when the maximum temperature occurs. The time to near peak temperature and also the time selected for analysis for these shafts was approximately 17 to 22 hours after placement. However, due to data transmission issues, only a few hours of data was transmitted for shaft 11. The last data set collected was used for analysis, although the data was collected well before the peak temperature, we feel the data can be evaluated for shaft integrity.

In general, temperature variations of +/- .9 degrees Fahrenheit are within normal range for TIP results due to the accuracy of the sensors. Anomalies would be indicated by abrupt reductions in temperature at a particular depth.

The TIP results are presented in Appendix B. The top left plot present the Measured Temperature (degrees Fahrenheit) vs. Depth (feet). Temperature roll-off at the bottom of a shaft is caused by heat loss due to the concrete/soil interface. Temperature roll-off at the top of pile is caused by heat loss due to the concrete/air interface. The top right plot displays the Estimated Effective Radius (inches) vs. Depth (feet). The bottom right plot displays a 2-D interpretation of the shaft. The rebar cage is displayed as a 2-D color spectrum with an overlay of projected pile exterior surface. The bottom left figure is a general soil profile with a 2-D shaft exterior overlay.

GRL has interpreted and categorized the results employing the following criteria:

- **Satisfactory** **(S)** 0 to 6% Effective Average Radius Reduction and Cover Criteria Met
- **Anomaly** **(A)** Effective Average Radius Reduction > 6% (Max Red %) **<u>or</u>** Cover Criteria Not Met (Further Evaluation Required)

When a tested shaft is deemed Anomaly (A), slices modeled at the area of question may be provided so that a structural evaluation of the shaft can be performed prior to implement any corrective measurements.

<u>All 11 shafts in phase 1 of the forward abutment are categorized as Satisfactory (S).</u> Descriptions of the Thermal Integrity Profiling results are presented below.

Shaft 6

The temperature profile for this shaft indicates a fairly constant temperature throughout the shaft with the measured temperature slightly cooling within the rock socket. The temperature roll offs at the top and bottom appear consistent with the shaft radius.

Based on the thermal integrity profiling results the effective radius is generally slightly oversized throughout the uncased portion above the rock socket. The effective radius in the rock socket is generally consistent with the design radius.

The rebar cage appears to be fairly well centered and the concrete cover generally exceeds 3 inches along the length of the shaft.

No data was received for wire number 2 in this shaft. Each wire is checked prior to shaft installation, however, data was not transmitted after concrete placement. The remaining 3 wires provided reliable data and we feel the integrity of this shaft can be evaluated from this data.

The overall thermal signature, based on the Temperature (degrees Fahrenheit) vs. Depth (feet) graph indicates the shaft is continuous with no reductions in the temperature indicative of major anomalies observed over the tested length. Based on the rating criteria noted above, this pile was categorized as **Satisfactory (S).**

Shaft 7

The temperature profile for this shaft indicates a fairly constant temperature throughout the shaft with the measured temperature slightly cooling within the rock socket. The temperature roll offs at the top and bottom appear consistent with the shaft radius.

Based on the thermal integrity profiling results the effective radius is generally consistent with the design radius throughout the uncased portion above the rock socket. The effective radius in the rock socket is marginally smaller than the design radius. Note that the provided concrete volume for this shaft is nearly exactly the theoretical volume of the shaft which would explain the marginally smaller computed effective radius in the rock socket and the smaller computed concrete cover. If the actual concrete volume placed was slightly more than reported, the computed effective radius in the rock socket would be consistent with the design radius. Furthermore, it's worth noting that the overall thermal signature vs. depth for this shaft is similar to the other shafts.

No data was received for wire number 3 in this shaft. Each wire is checked prior to shaft installation, however, data was not transmitted after concrete placement. The remaining 3 wires provided reliable data and we feel the integrity of this shaft can be evaluated from this data.

The overall thermal signature, based on the Temperature (degrees Fahrenheit) vs. Depth (feet) graph indicates the shaft is continuous with no reductions in the temperature indicative of major anomalies observed over the tested length. Based on the rating criteria noted above, this pile was categorized as **Satisfactory (S).**

Shaft 8

The temperature profile for this shaft indicates a fairly constant temperature throughout the shaft with the measured temperature slightly cooling within the rock socket. The temperature roll offs at the top and bottom appear consistent with the shaft radius.

Based on the thermal integrity profiling results the effective radius is generally slightly oversized throughout the uncased portion above the rock socket. The effective radius in the rock socket is generally consistent with the design radius.

The overall thermal signature, based on the Temperature (degrees Fahrenheit) vs. Depth (feet) graph indicates the shaft is continuous with no reductions in the temperature indicative of major anomalies observed over the tested length. Based on the rating criteria noted above, this pile was categorized as **Satisfactory (S).**

Shaft 9

The temperature profile for this shaft indicates a fairly constant temperature throughout the shaft with the measured temperature slightly cooling within the rock socket. The temperature roll offs at the top and bottom appear consistent with the shaft radius.

Based on the thermal integrity profiling results the effective radius is generally consistent with the design radius throughout the uncased portion above the rock socket. The effective radius in the rock socket is marginally smaller than the design radius. Note that the provided concrete volume for this shaft is nearly exactly the theoretical volume of the shaft which would explain the marginally smaller computed effective radius in the rock socket and the smaller computed concrete cover. If the actual concrete volume placed was slightly more than reported, the computed effective radius in the rock socket would be consistent with the design radius. Furthermore, it's worth noting that the overall thermal signature vs. depth for this shaft is similar to the other shafts.

The overall thermal signature, based on the Temperature (degrees Fahrenheit) vs. Depth (feet) graph indicates the shaft is continuous with no reductions in the temperature indicative of major anomalies observed over the tested length. Based on the rating criteria noted above, this pile was categorized as **Satisfactory (S).**

Shaft 10

The temperature profile for this shaft indicates a fairly constant temperature throughout the shaft, with a decrease at the top of the rock socket and increasing temperature with depth within the rock socket. The temperature roll offs at the top and bottom appear consistent with the shaft radius.

Based on the thermal integrity profiling results the effective radius is generally slightly oversized throughout the uncased portion above the rock socket. The effective radius in the rock socket is oversized and appears to increase over the bottom 7 feet to approximately 27 inches near the bottom of the shaft.

The rebar cage appears to be slightly shifted. Wire 1 indicates cooler temperatures within the soil and warmer temperatures within the rock socket. Wire 4 indicates warmer temperatures within the soil and cooler temperatures within the rock socket. It is possible that the wire serial numbers were reported incorrectly as this data indicating the cage shifting is unreasonable. However, the concrete cover generally exceeds 3 inches along the length of the shaft.

The overall thermal signature, based on the Temperature (degrees Fahrenheit) vs. Depth (feet) graph indicates the shaft is continuous with no reductions in the temperature indicative of major anomalies observed over the tested length. Based on the rating criteria noted above, this pile was categorized as **Satisfactory (S).**

Shaft 11

The temperature profile for this shaft indicates a fairly constant temperature throughout the shaft with the measured temperature slightly cooling within the rock socket. The temperature roll offs at the top and bottom appear consistent with the shaft radius.

Based on the thermal integrity profiling results the effective radius is generally slightly oversized throughout the uncased portion above the rock socket. The effective radius in the rock socket is generally consistent with the design radius.

The rebar cage appears to be fairly well centered. The concrete cover generally exceeds 3 inches along the length of the shaft.

The overall thermal signature, based on the Temperature (degrees Fahrenheit) vs. Depth (feet) graph indicates the shaft is continuous with no reductions in the temperature indicative of major anomalies observed over the tested length. Based on the rating criteria noted above, this pile was categorized as **Satisfactory (S).**

Shaft 12

The temperature profile for this shaft indicates a fairly constant temperature throughout the shaft with the measured temperature slightly cooling within the rock socket. The temperature roll offs at the top and bottom appear consistent with the shaft radius.

Based on the thermal integrity profiling results the effective radius is generally consistent with the design radius throughout the uncased portion above the rock socket. The effective radius in the rock socket is generally consistent with the design radius.

The rebar cage appears to be fairly well centered. The concrete cover generally is close to, or exceeds 3 inches along the length of the shaft.

The overall thermal signature, based on the Temperature (degrees Fahrenheit) vs. Depth (feet) graph indicates the shaft is continuous with no reductions in the temperature indicative of major anomalies observed over the tested length. Based on the rating criteria noted above, this pile was categorized as **Satisfactory (S).**

Shaft 13

The temperature profile for this shaft indicates a fairly constant temperature throughout the shaft with the measured temperature slightly cooling within the rock socket. The temperature roll offs at the top and bottom appear consistent with the shaft radius.

Based on the thermal integrity profiling results the effective radius is generally slightly oversized throughout the uncased portion above the rock socket. The effective radius in the rock socket is generally consistent with the design radius.

The rebar cage appears to be fairly well centered and the concrete cover generally is close to, or exceeds 3 inches along the length of the shaft.

No data was received for wire number 1 in this shaft. Each wire is checked prior to shaft installation, however, data was not transmitted after concrete placement. The remaining 3 wires provided reliable data and we feel the integrity of this shaft can be evaluated from this data.

The overall thermal signature, based on the Temperature (degrees Fahrenheit) vs. Depth (feet) graph indicates the shaft is continuous with no reductions in the temperature indicative of major anomalies observed over the tested length. Based on the rating criteria noted above, this pile was categorized as **Satisfactory (S).**

Shaft 14

The temperature profile for this shaft indicates a fairly constant temperature throughout the shaft with the measured temperature slightly cooling within the rock socket. The temperature roll offs at the top and bottom appear consistent with the shaft radius.

Based on the thermal integrity profiling results the effective radius is generally slightly oversized throughout the uncased portion above the rock socket. The effective radius in the rock socket is generally consistent with the design radius.

The rebar cage appears to be fairly well centered and the concrete cover generally is close to, or exceeds 3 inches along the length of the shaft.

No data was received for wire number 3 in this shaft. Each wire is checked prior to shaft installation, however, data was not transmitted after concrete placement. The remaining 3 wires provided reliable data and we feel the integrity of this shaft can be evaluated from this data.

The overall thermal signature, based on the Temperature (degrees Fahrenheit) vs. Depth (feet) graph indicates the shaft is continuous with no reductions in the temperature indicative of major anomalies observed over the tested length. Based on the rating criteria noted above, this pile was categorized as **Satisfactory (S).**

Shaft 15

The temperature profile for this shaft indicates a fairly constant temperature throughout the shaft with the measured temperature slightly cooling within the rock socket. The temperature roll offs at the top and bottom appear consistent with the shaft radius.

Based on the thermal integrity profiling results the effective radius is generally consistent with the design radius throughout the uncased portion above the rock socket. The effective radius in the rock socket is generally consistent with the design radius.

The rebar cage appears to be fairly well centered. The concrete cover generally exceeds 3 inches along the length of the shaft.

The overall thermal signature, based on the Temperature (degrees Fahrenheit) vs. Depth (feet) graph indicates the shaft is continuous with no reductions in the temperature indicative of major anomalies observed over the tested length. Based on the rating criteria noted above, this pile was categorized as **Satisfactory (S).**

Shaft 16

The temperature profile for this shaft indicates a fairly constant temperature throughout the shaft with the measured temperature slightly cooling within the rock socket. The temperature roll offs at the top and bottom appear consistent with the shaft radius.

Based on the thermal integrity profiling results the effective radius is generally consistent with the design radius throughout the uncased portion above the rock socket. The effective radius in the rock socket is generally consistent with the design radius.

The rebar cage appears to be fairly well centered. The concrete cover generally is close to, or exceeds 3 inches along the length of the shaft.

The overall thermal signature, based on the Temperature (degrees Fahrenheit) vs. Depth (feet) graph indicates the shaft is continuous with no reductions in the temperature indicative of major anomalies observed over the tested length. Based on the rating criteria noted above, this pile was categorized as **Satisfactory (S).**

ADDITIONAL CONSIDERATIONS

Uncertainties in the interpreted TIP results include calculated corrections for pile top and bottom shape which depend on the air and the annual average soil temperature, respectively. Other factors include variations in the thermal diffusivity of the soil around the pile and the reinforcing cage which may have undergone movement during concrete placement. Furthermore, inaccuracies in the observed, installed concrete volumes may cause errors in calculated radii and 3-D pile shape interpretations. These factors limit the direct, unquestioned use of the results presented in this report for pile suitability. We recommend that the responsible engineer(s) use the TIP results in conjunction with the soil borings, pile construction/inspection records, results from other test methods, and foundation loading information to determine foundation acceptability with respect to design requirements.

We appreciate the opportunity to be of assistance to you on this project. Please contact us if you have any questions regarding this report, or if we may be of further service.

Sincerely,
GRL Engineers, Inc.

Benjamin White, P.E.

C. Michael Morgano, P.E.

Appendix A: Thermal Integrity Profiling

1.1 Test Method Overview

The Thermal Integrity Profiler (TIP) uses the temperature generated by curing cement (hydration energy) to assess the quality of cast in place concrete foundations (i.e. drilled shafts, Auger-cast-in-place (ACIP) or Continuous flight auger (CFA) piles). Whereas other methods of integrity testing have limits in assessing the full cross-section or length (Cross-Hole Sonic Logging (CSL): inside the reinforcing cage, or Gamma-gamma Logging (GGL): within 3 inches (75mm) of access tube: Pile Integrity Testing (PIT): length limits or after major section changes), TIP measurements evaluate the concrete quality from all portions of the cross-section along the entire length.

In general, a shortage of competent concrete is registered by relative cool regions (e.g. necks or inclusions); the presence of extra concrete is registered by relative warm regions (e.g. over-pour bulging into soft soil strata).

Anomalies both inside and outside the reinforcing cage not only disrupt the temperature signature near the anomaly, but also at more distant locations at progressively less effect.

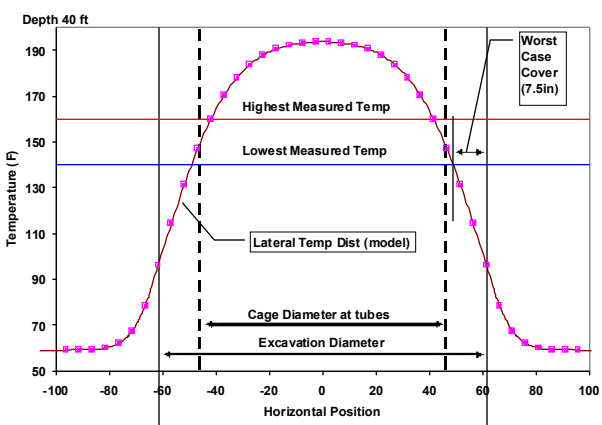

Figure A: Temperature distribution for 10 ft (3.03 m) diameter shaft. Lowest temperature measured corresponded to a 7.5 in (19 cm) cover

The shaft temperature is dependent on the shaft diameter, mix design, and the time of measurement.

Because the temperature distribution within a shaft is bell-shaped with respect to radial position (Figure A), the measurements are sensitive to cage eccentricity as well as the surrounding cover. A cage closer to one side of the excavation exhibits cooler temperatures than average when the cage is closer to the soil. When the cage is closer to the shaft center, temperatures are then warmer.

Since the diameter and temperature relationship is strongly linear in the region of the cage, a plot of the average temperature of the entire cage versus depth mimics the actual shape of the shaft as determined from field concreting logs. Use of construction and concreting logs can be used in concert with the TIP data to better assess the overall quality of a given shaft (Figure B).

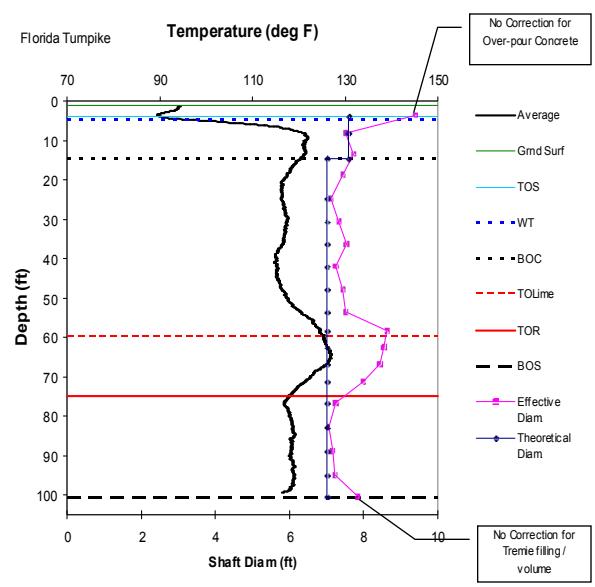

Figure B: Average shaft temperature (black) and effective diameter computed from concreting log (pink with square markers)

1.2 Data Collection

TIP data is obtained either using probes in access tubes or using embedded THERMAL WIRES®.

Figure C: Thermal Integrity Profiling (Probe method).

1.2.1 The TIP system – Probe method

The TIP probe uses four orthogonally oriented infrared sensors within a single thermal probe (Figure D) to measure the inside wall temperature of standard 1.5 or 2.0 inch (38 or 50 mm) access tubes (plastic or steel). Four sensors provide redundancy. The probe diameter is 1.25 inches (32 mm)

Figure D: 5 in. long by 1.25 in. diameter Thermal Probe with four infrared sensors

A depth-encoder attached to the access tube tracks the probe location as it is lowered by the engineer for the entire length of each tube (access tubes must be free of water debris and other liquids during testing). The temperature data are collected typically 12 to 48 hours after concrete casting, depending on shaft diameter and concrete mix. TIP results are insensitive to de-bonding.

1.2.2 The TIP system – Thermal Wire method

The embedded sensor method uses wires with thermal sensors attached to the reinforcing cage (Figure E). No access tubes are required. Data is automatically sampled at specified intervals (generally every 15 minutes) from each embedded THERMAL WIRE cable by a battery powered Thermal Acquisition Port (TAP) allowing the concrete curing process to be monitored. Data can be collected on site at any time after casting for evaluation. A single embedded wire is attached to a center rebar for smaller augercast (CFA) piles, soil nails, micropiles and jet-grouted applications.

Figure E: Embedded THERMAL WIRE cable attached to rebar cage (shown adjacent to CSL access tubes.)

Should an anomaly be detected (local relatively cool spot) by either probes or embedded THERMAL WIRE cables, no additional field data is necessary to perform complete in-depth analyses.

1.3 Data Analysis

Field measurements alone highlight glaring irregularities since the average temperature profile shows the general shaft shape. This level of simple review reveals cage alignment irregularities, casing location, locations of over-pour bulges or necking or deficient concrete, and can easily alert the user or an owner of areas of concern.

Superposition of construction and concreting logs can calibrate the average diameter to the overall average temperature, particularly when multiple concrete trucks per pile are used.

Finally, the measured temperatures when converted to radius can be used to provide a 3-D rendering (Figure F) of the as-built shaft as well as 2-D slices (Figure G) of the shaft cross section at any depths of interest and vertical slices through any radial orientation.

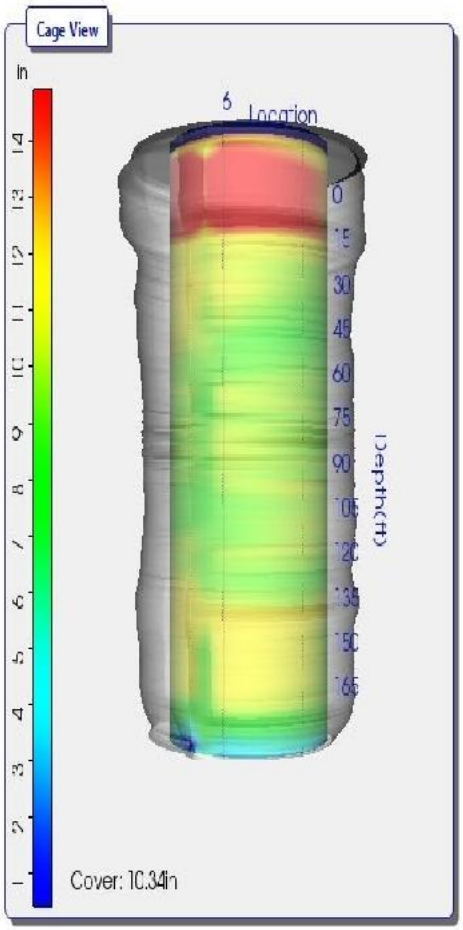

Figure F: 3-D projection of shaft

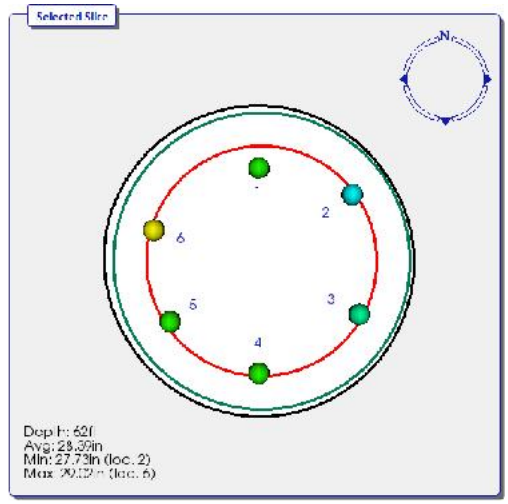

Figure G: horizontal 'slice' of the shaft

1.3.1 Roll-off Modelling

The TOS/BOS Correction window allows the user to model the 'roll-off' observed typically at the top and bottom of the shaft. Note that for a majority of the shaft the heat is dispersed only in the radial direction, however for a length corresponding to one diameter at both the upper and lower portion of the shaft, or any large diameter change, the heat is dispersed not just in a radial pattern, but also in a longitudinal direction. This occurs because the heat is not just conducted into the laterally surrounding soil but also, for the top of shaft, radiates into the ambient air; and for the bottom of shaft, into the soil beneath the shaft. Because of this, proper analysis and interpretation of Thermal Integrity results requires a correction for this region of the shaft where the temperatures are non-linear. It should be noted that the surrounding soil receives the heat that the shaft radiates and thus becomes warm. The soil is warmest at the shaft interface and gradually cools as the radial distance from the shaft center increases.

The roll-off at the shaft ends for a uniform shaft follows a hyperbolic tangent curve. If we superimpose this curve on the measured temperature curve in the roll-off zone, the difference between these curves is then due to differences in the actual shaft shape relative to the uniform cylindrical shape, allowing us to compute the estimated actual shape.

Corrections made at the top and bottom of the shaft will estimate the region of non-linear temperatures due to the roll-off by applying an estimated curve based of the ambient soil temperature, ambient air temperature, and average concrete temperature. Note that roll-off correction is a 'best-fit' correction.

1.3.2 Effective Radius

In many cases, simple presentation of the temperatures versus depth may be satisfactory. For example, the total installed volume is known to be substantially greater than the theoretical neat volume of the hole (nominal area times nominal length) and the temperature profiles are relatively uniform, with normal top and bottom temperature roll-off observed.

If unusual features are observed in the data (local cool temperatures or significant cage shifts, or if project specifications require, then further analysis is generally performed to obtain an "***effective radius***" versus depth versus quadrant. The "***effective radius***" is "expected" to be the designed shaft radius which may actually be the radius of the tool or the radius of a casing. As the measured temperature is proportional to the local radius and cover, such a correlation is produced to estimate the effective radius from temperature measurements and the total volume of placed concrete. The term "***effective radius***" was coined to address the scenario where concrete quality may be varying instead of shaft shape. To that end, ***effective radius is defined as that radius of intact uncompromised concrete that would produce the measured temperature***.

In order to properly interpret data into an "***effective radius***" presentation, a significant amount of information should be gathered. Thermal data is collected into the TIP main unit and includes the thermal arrays and descriptions of geometries (nominal radius, nominal cage radius, spacing between measurement locations, etc.)

Other pertinent information would include soil borings, Thermal field logs, drilling logs that would include any pertinent diameter changes, casing lengths (permanent or temporary), and any unusual occurrences, and logs of concrete placement (preferably vs depth). If the shaft extends above the ground or is cased through water zone, these affect this cooling of the upper portion of the shaft, and therefore data interpretation. It should be noted that the diffusivity of heat transfer in the soil is relatively unaffected by the soil type or water table as the heat generation is significantly higher and drives the process (at least through the temperature rise portion of the heating and cooling cycle). Obviously the more information available the better qualified the result answer that can be achieved.

1.4 Disclaimer

As Thermal Integrity Profiling is based on the heat generated during the concrete hydration process, the test method is then highly dependent on acquiring data early in the hydration process, generally slightly before or after the point in time the shaft reaches peak heat. The point in time which peak heat occurs is dependent on actual shaft diameter and actual concrete mix design.

As with most Non-Destructive methods of pile material testing, results are not always a clear indication of the strength of a shaft. A variety of error sources or limitations can mask some of the defects while exaggerating others. It is therefore suggested that the TIP results are always used together with other records of shaft installation and that they are not used as the sole basis for shaft rejection or shaft acceptance.

As 'Roll-off' regions in the shaft are subject to ambient atmospheric conditions as well as ambient soil temperatures, the modelling is dependent on the accuracy of such information. Additionally, where the bottom 'roll-off' occurs is dependent on where the lowest thermal measurement has occurred and the actual bottom of the shaft.

As the Effective Radius estimation is highly dependent on concrete volume measurements, the accuracy of the effective radius is thus equally dependent on those volume measurements. Shafts with little volume

information, particularly in the case of small and/or short shafts which may require concrete volumes less than one truck load, may have a tendency to over-predict the effective radius.

If Modelling of the concrete mix design is employed the results of such modelling are dependent on the accuracy of the information given and the actual mixture placed

Shafts with multiple or highly variable impedance (cross section) changes produce complex records which are difficult or impossible to analyze after the first major or second smaller reflection.

Lack or discontinuities in reinforcement cannot be detected

It should be noted, as with many other non-destructive test methods, that the method can only assess shaft integrity and makes no qualifications on the suitability of the shafts load carrying capacity.

1.5 Corrective Measures

A limited number of corrective measures are available when a defect is indicated by the TIP method. Such measures include:

•Static load testing to prove the shaft integrity to be adequate. This is often the most expensive alternate and not well suited for testing large numbers of shafts.

•Dynamic Load Testing (DLT) with a Pile Driving Analyzer® which would yield evidence of satisfactory shaft performance under the dynamic load, which is typically in the range of the shaft's service loads.

•If access tubes are installed in the shaft. Testing by CSL, if defects are located with the direct path of the access tube combinations, may confirm the presence of defect.

•Sonic Pulse Echo testing with the Pile Integrity Tester™ (PIT) as an additional method of non-destructive testing.

•Coring of the shaft. Besides yielding a concrete core, video cameras can be used in the cored hole for a visual inspection of the shaft concrete.

•Repair by grouting high strength reinforcement bars in the access tubes. This is only possible if the tubes are made of steel.

•Pressure grouting the shaft either by piercing the tubes or by cored access holes.

Appendix B: Thermal Integrity Profiling Results

Opportunity Corridor 3

Bridge CUY-10-2039 Norfolk Southern RR over OH-10

Forward Abutment Phase 1 - Shafts 6 though 16

Thermal Integrity Profiling Results

Forward Abutment Shaft 6

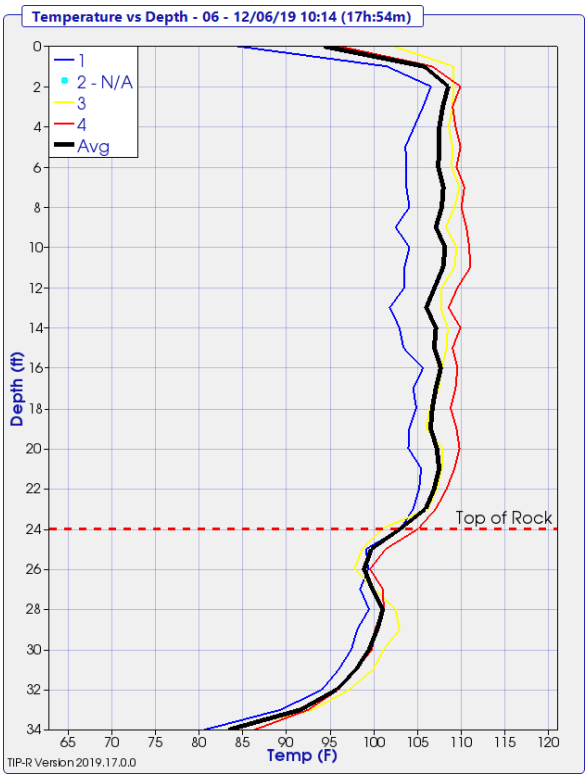

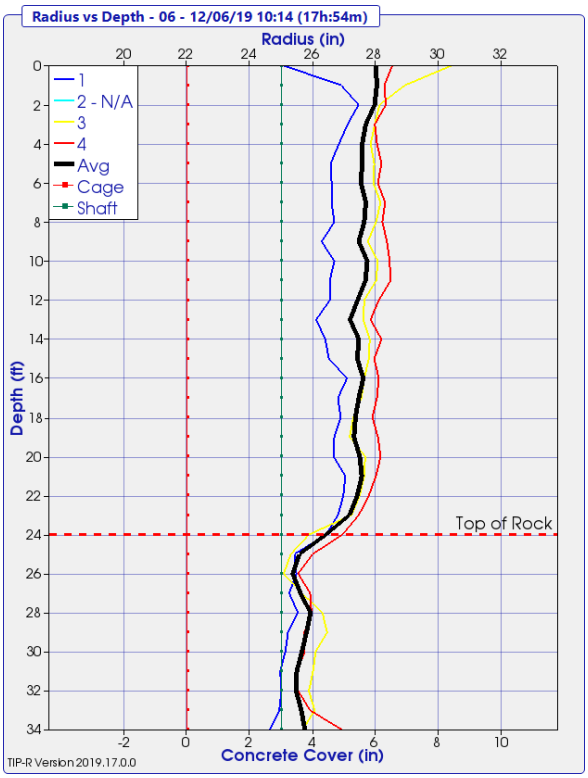

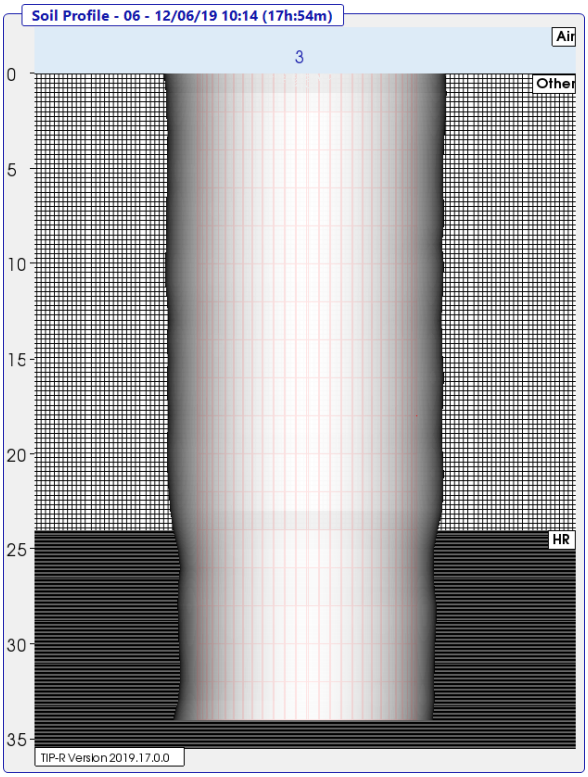

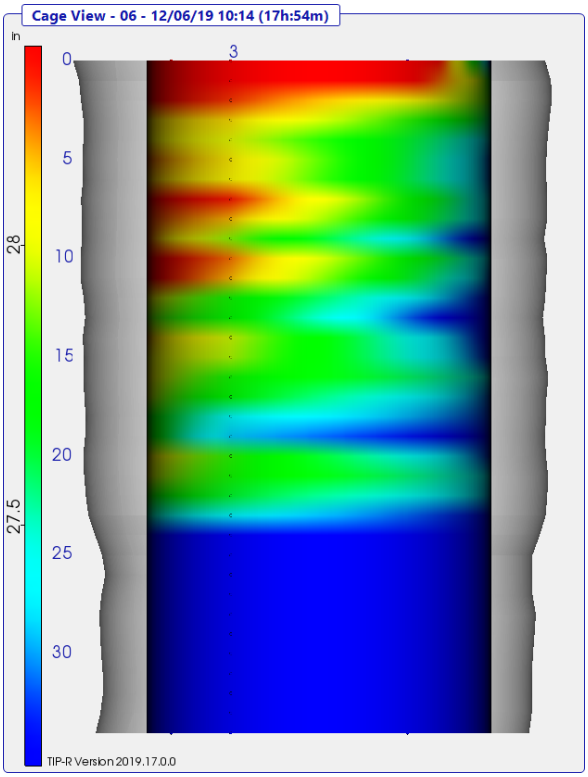

Forward Abutment Shaft 7

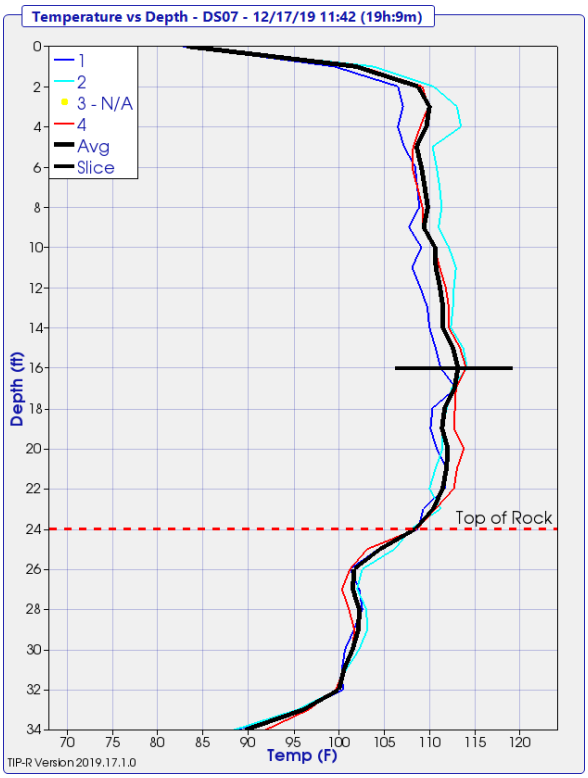

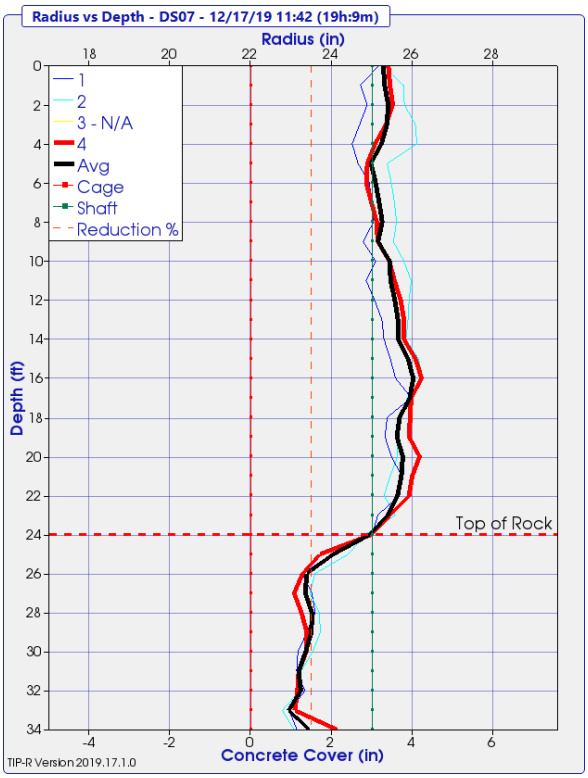

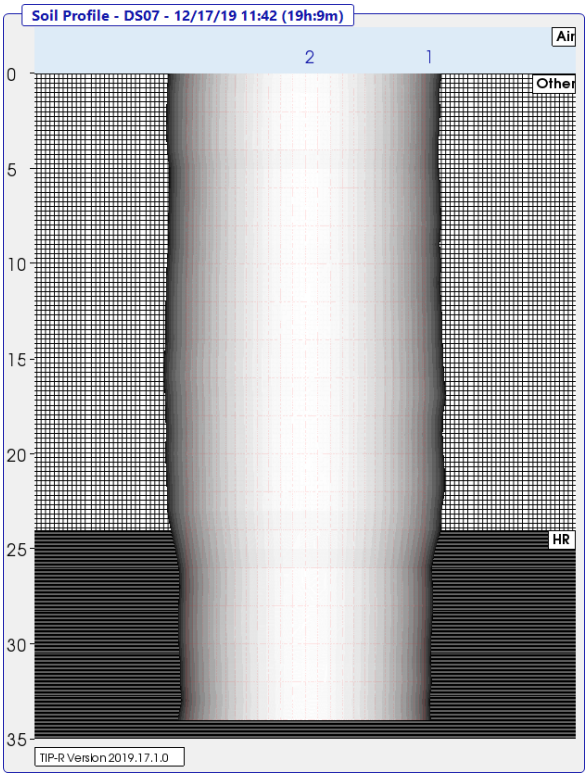

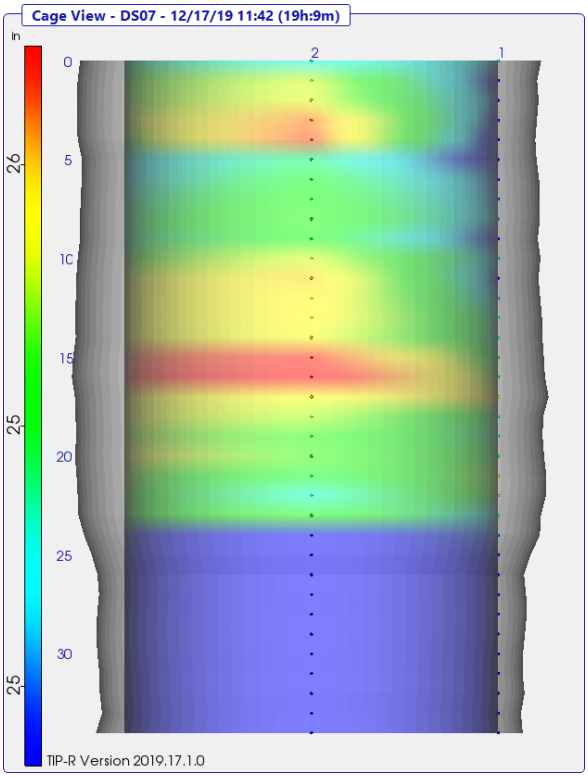

Forward Abutment Shaft 8

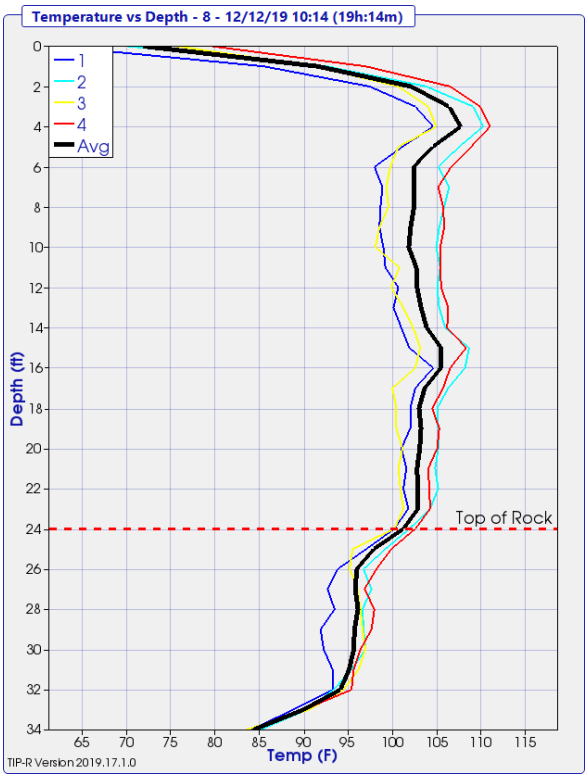

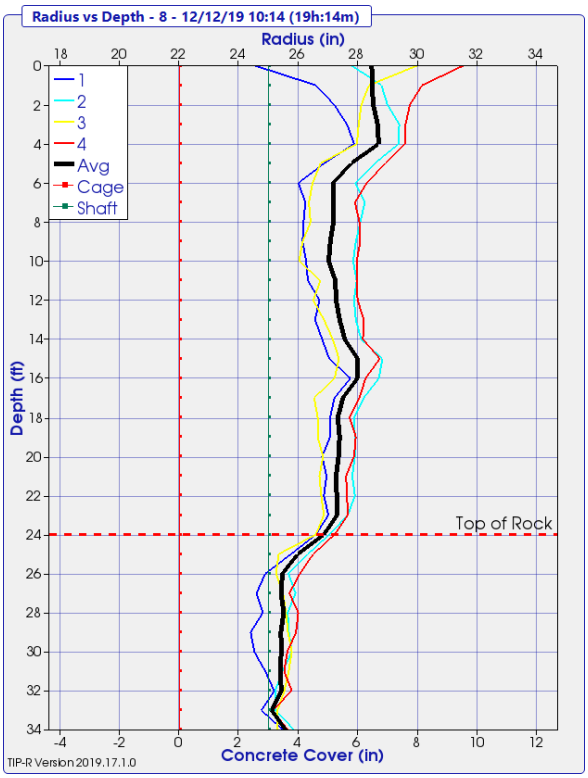

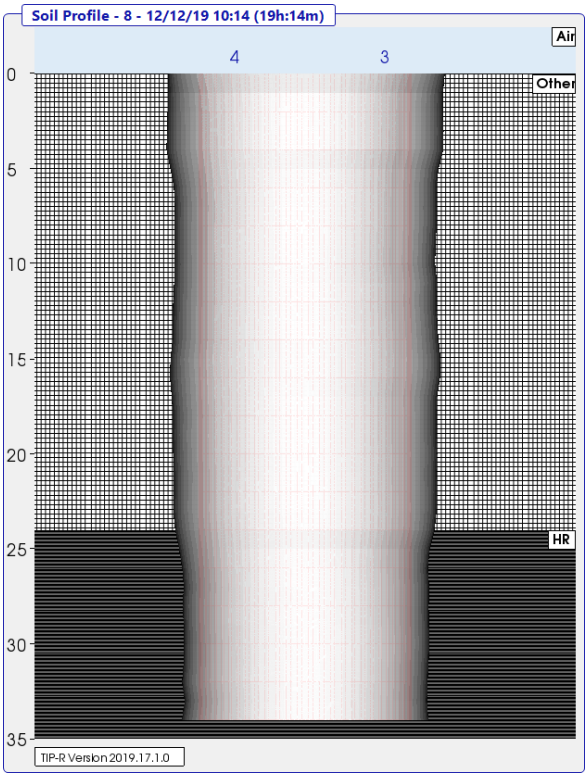

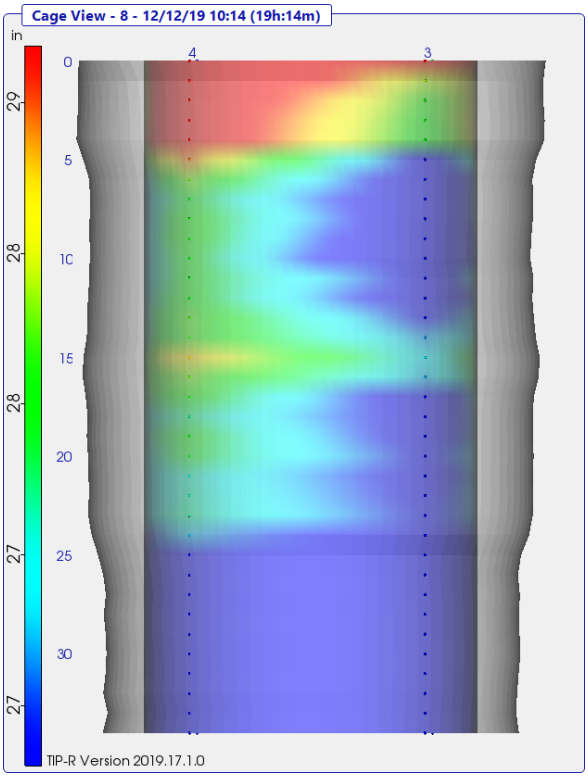

Forward Abutment Shaft 9

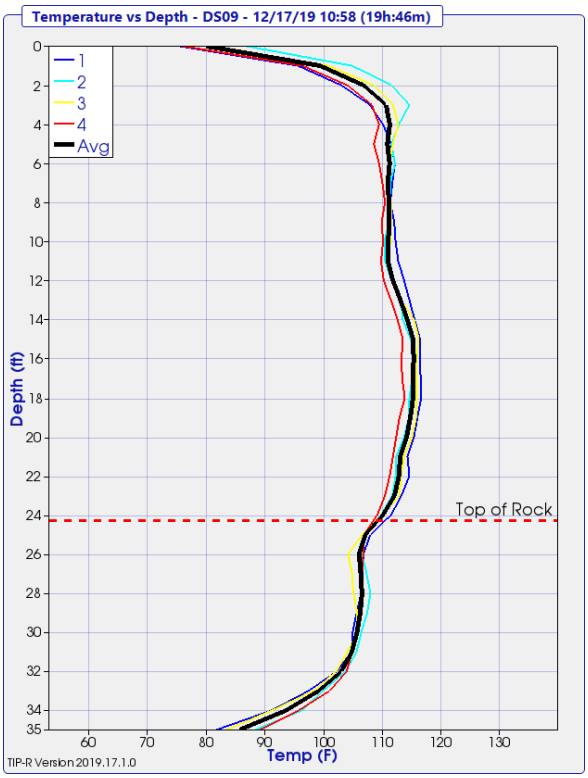

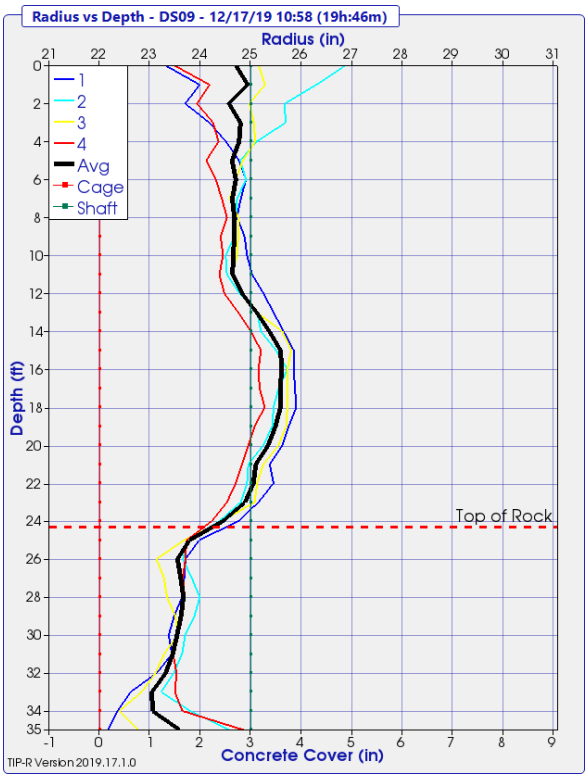

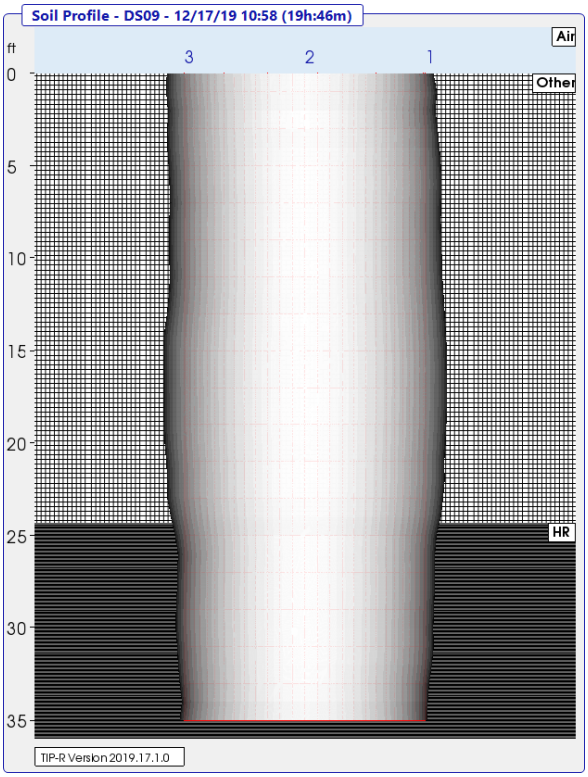

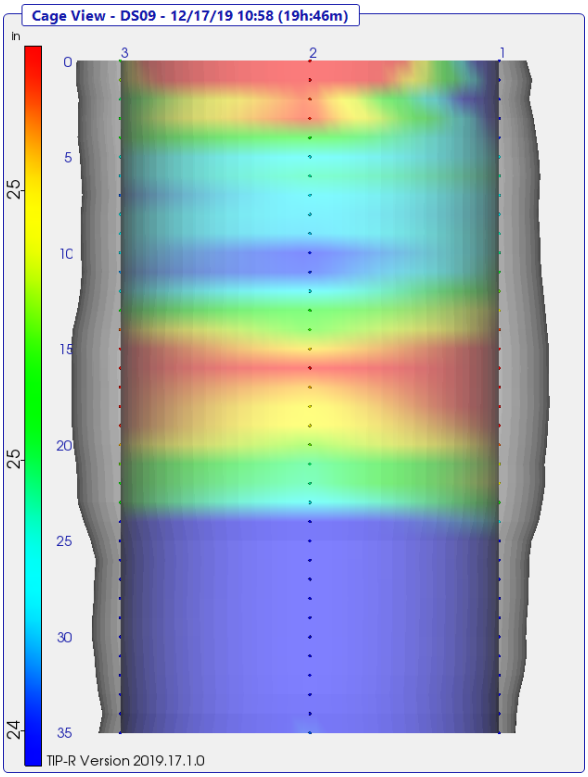

Forward Abutment Shaft 10

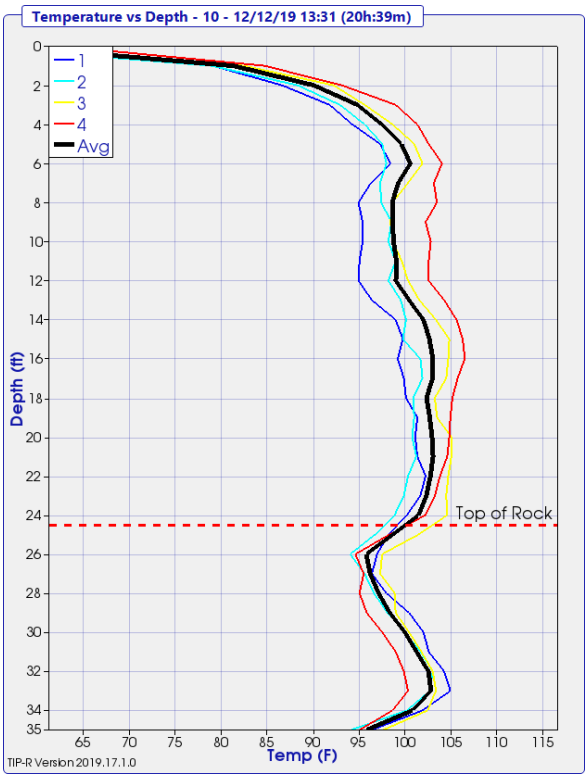

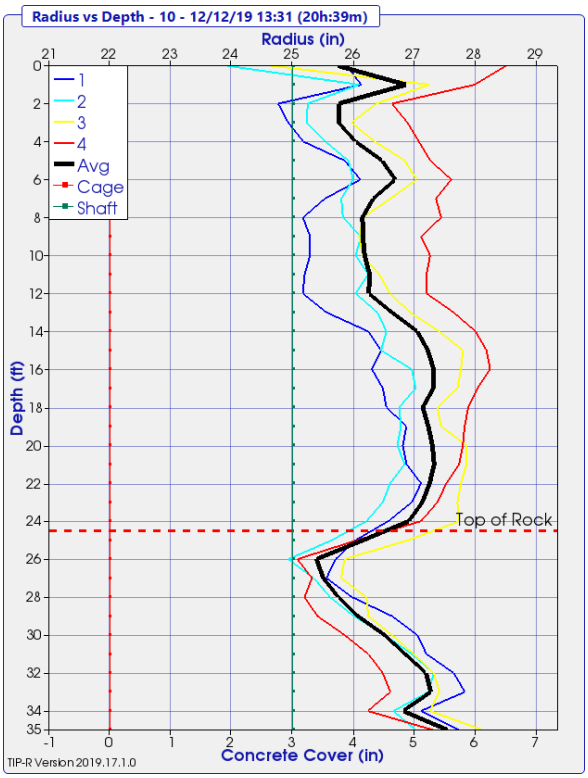

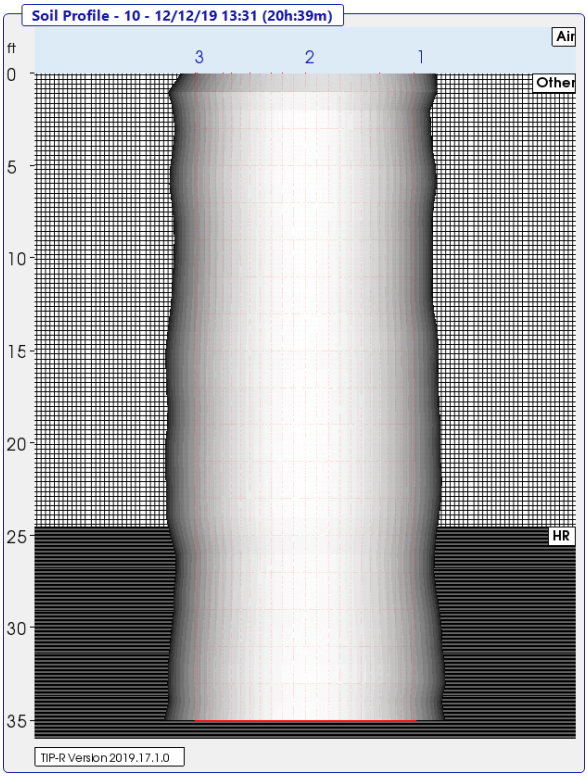

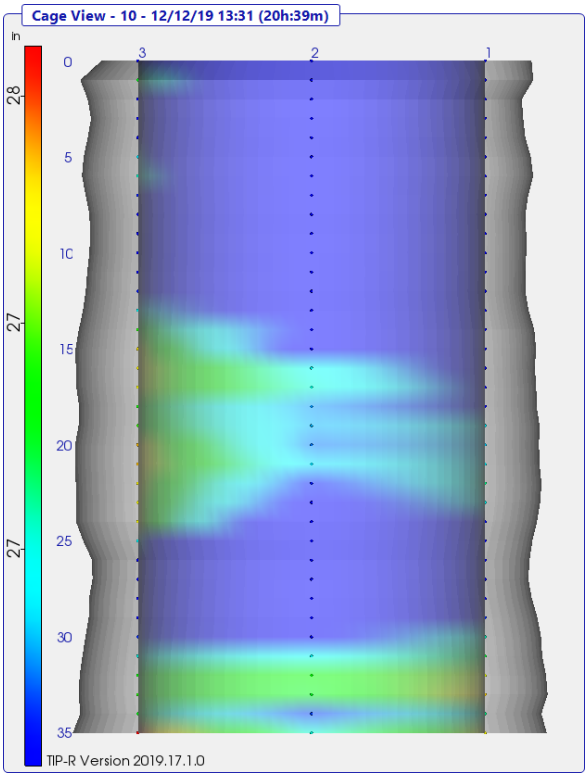

Forward Abutment Shaft 11

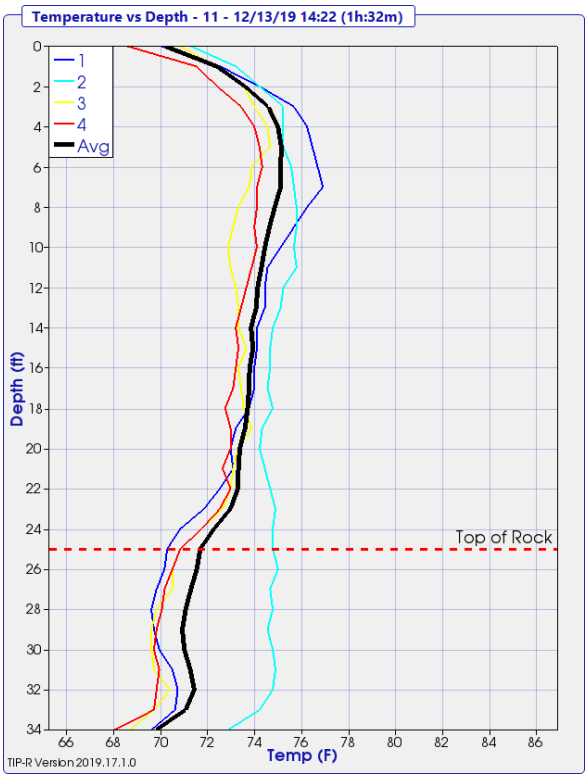

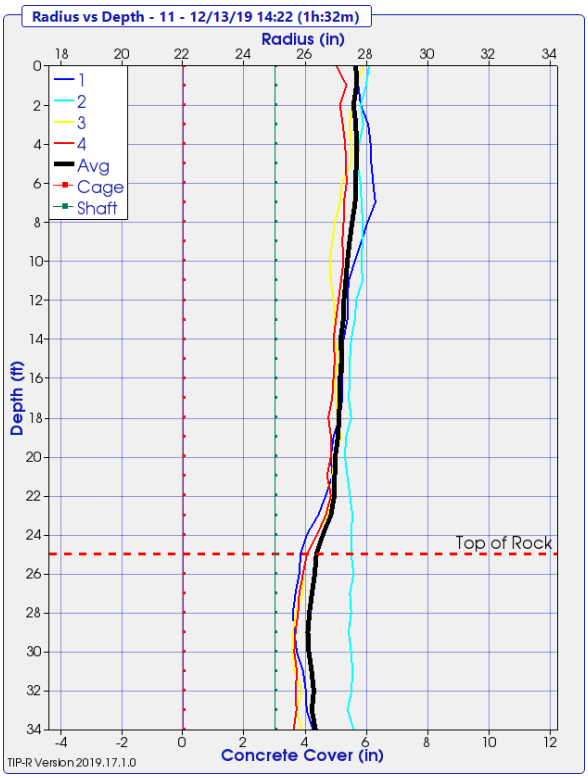

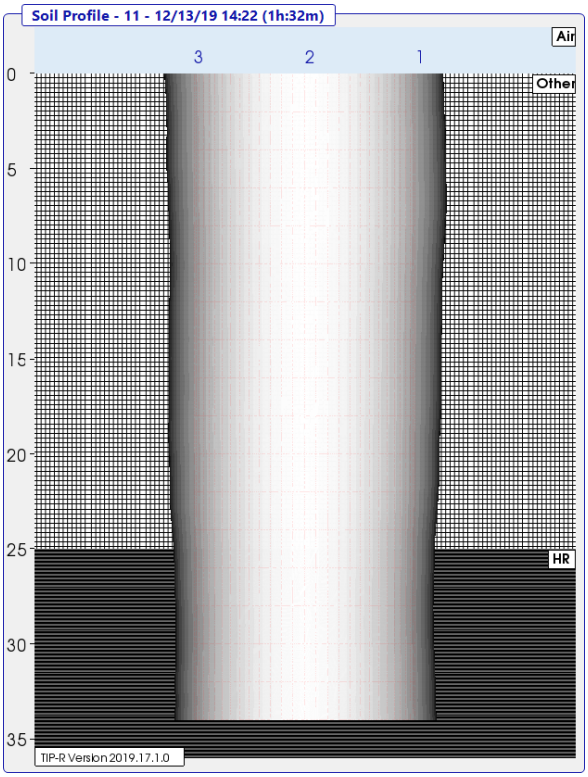

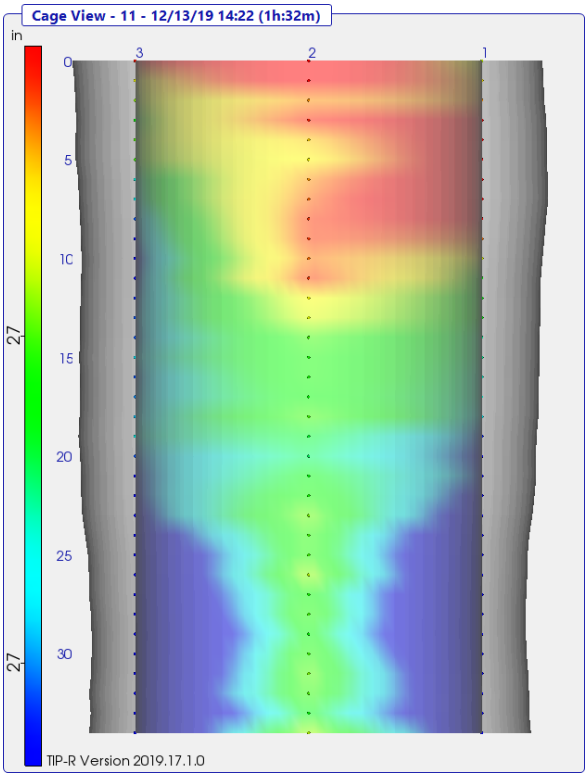

Forward Abutment Shaft 12

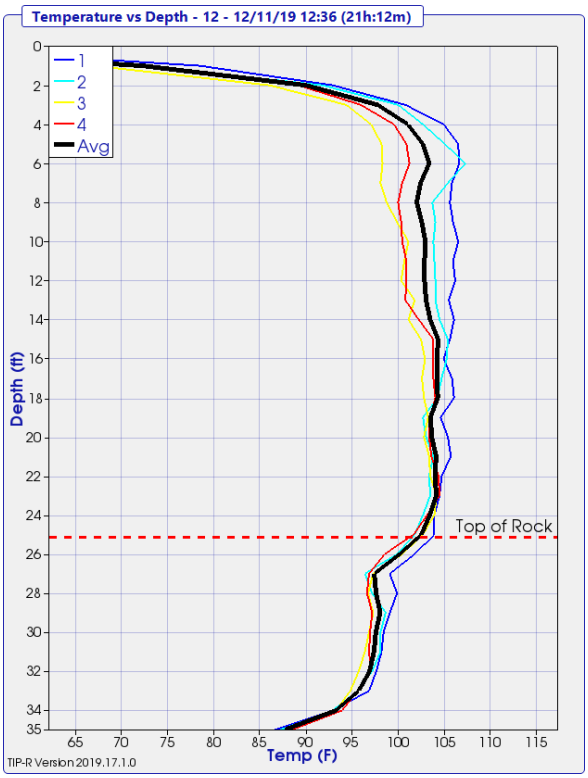

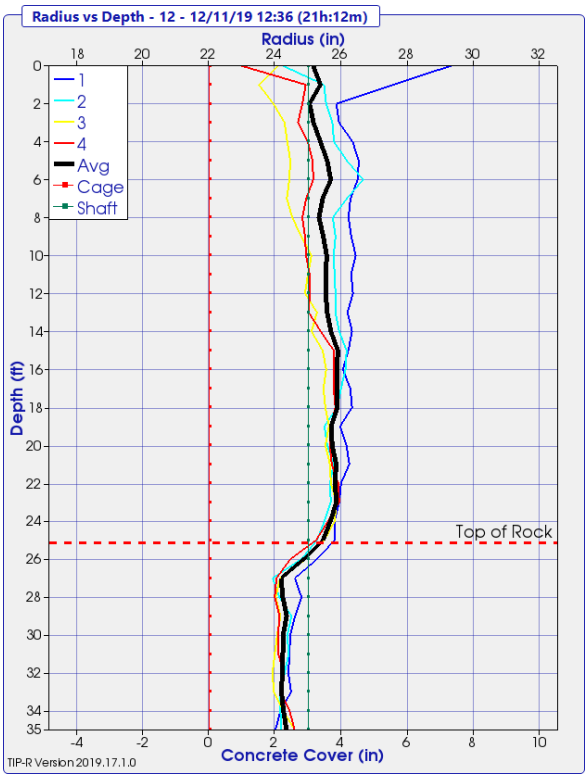

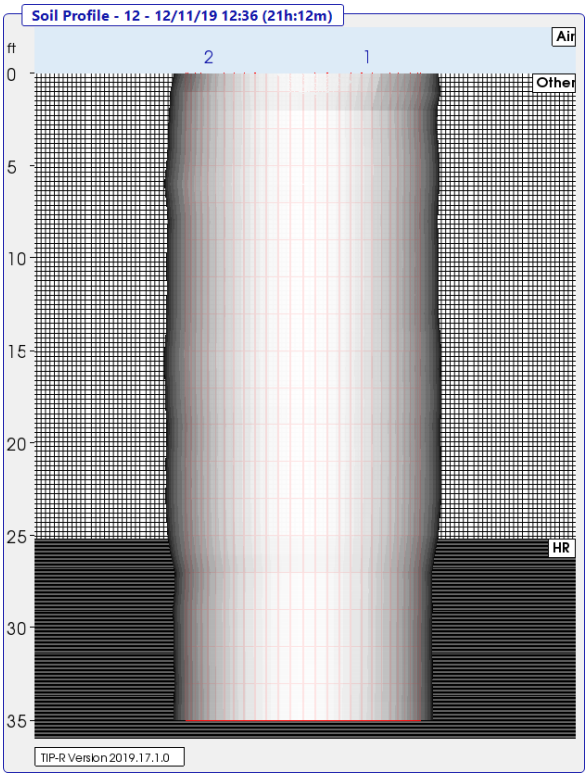

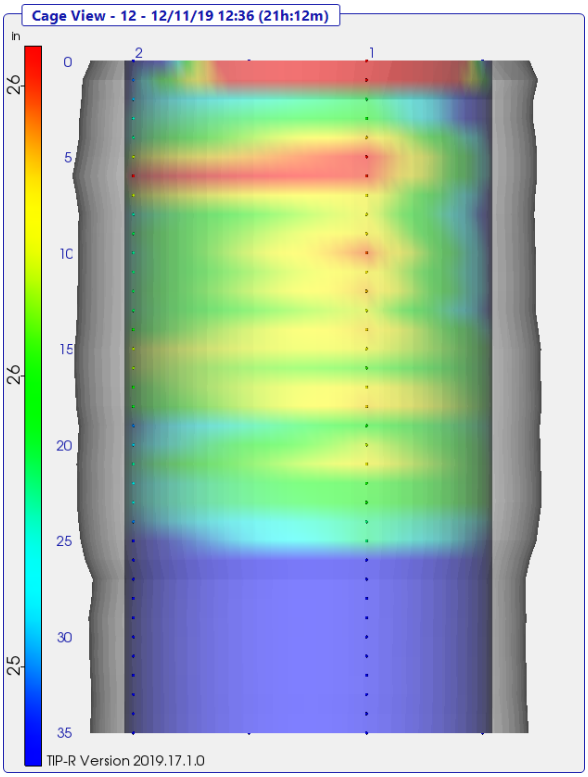

Forward Abutment Shaft 13

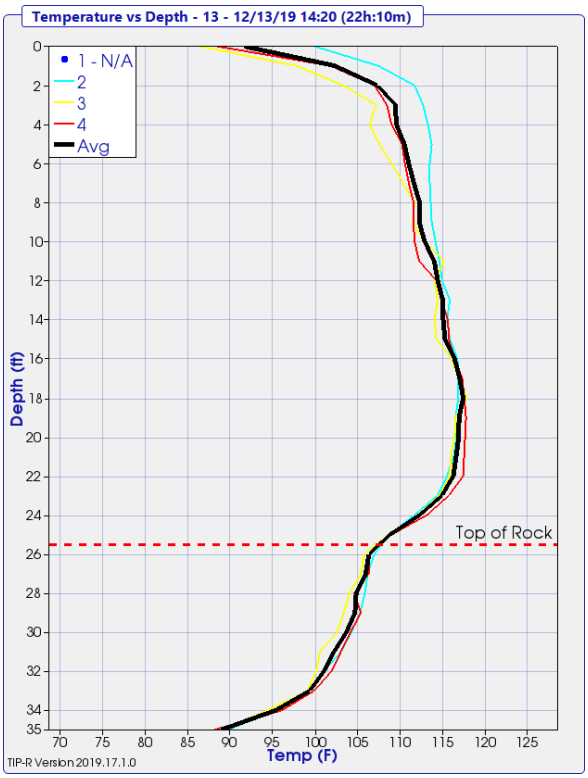

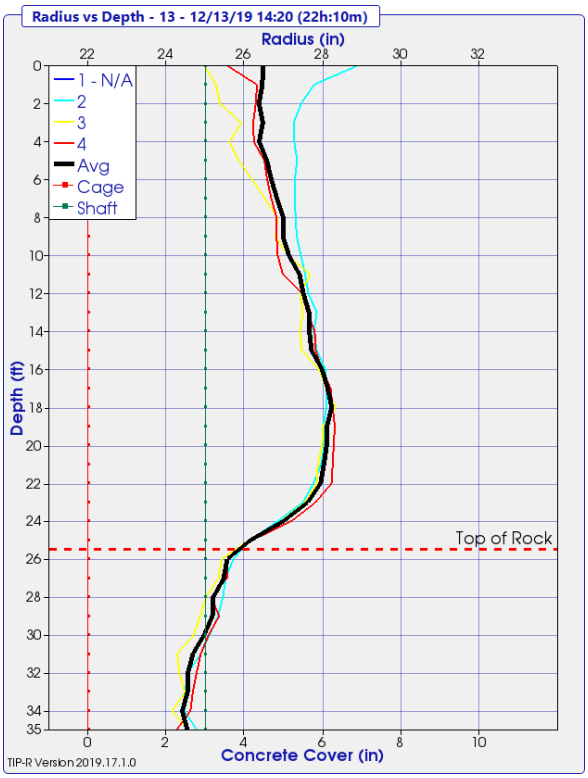

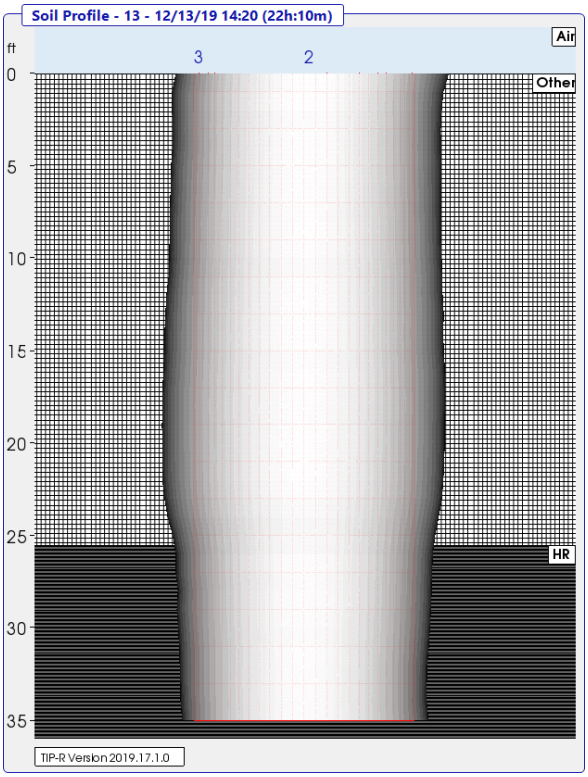

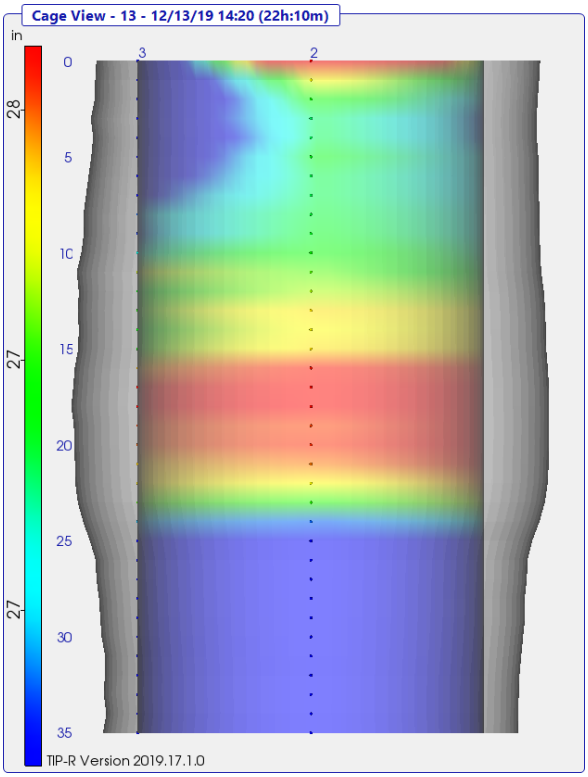

Forward Abutment Shaft 14

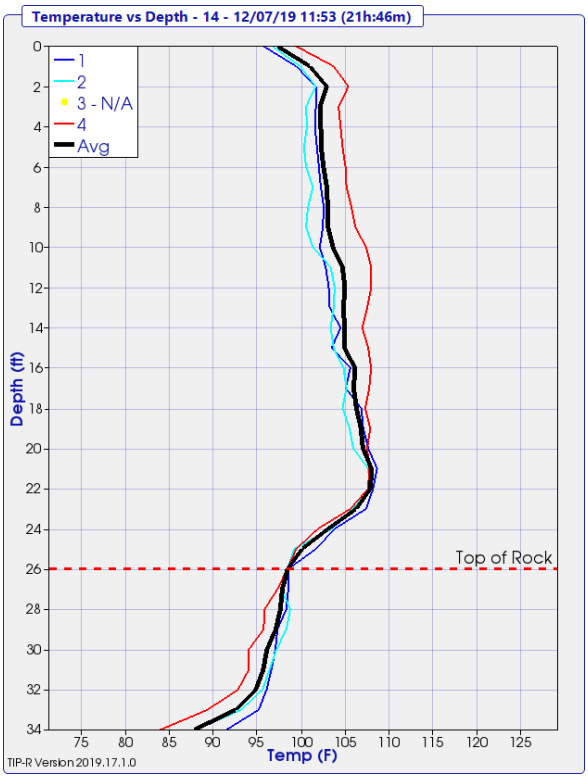

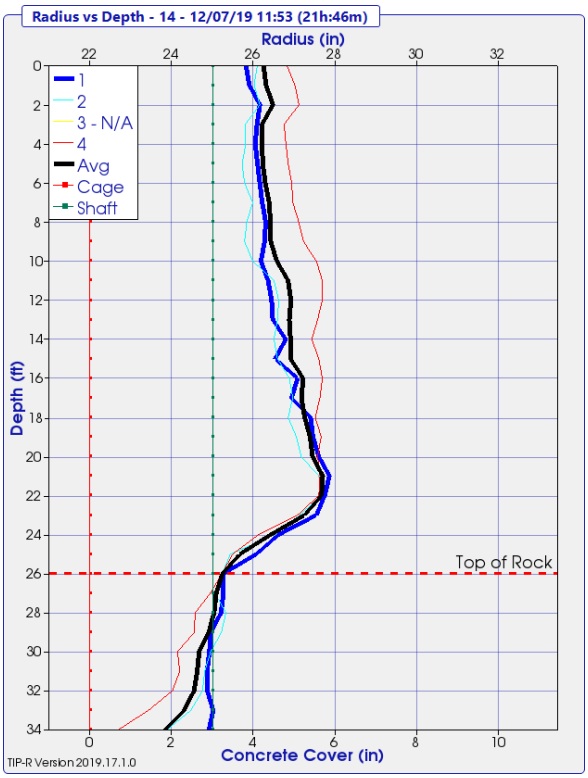

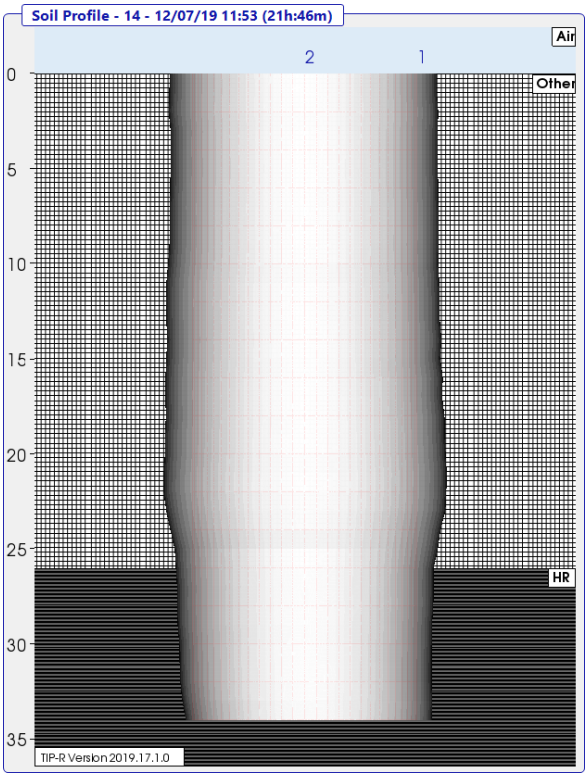

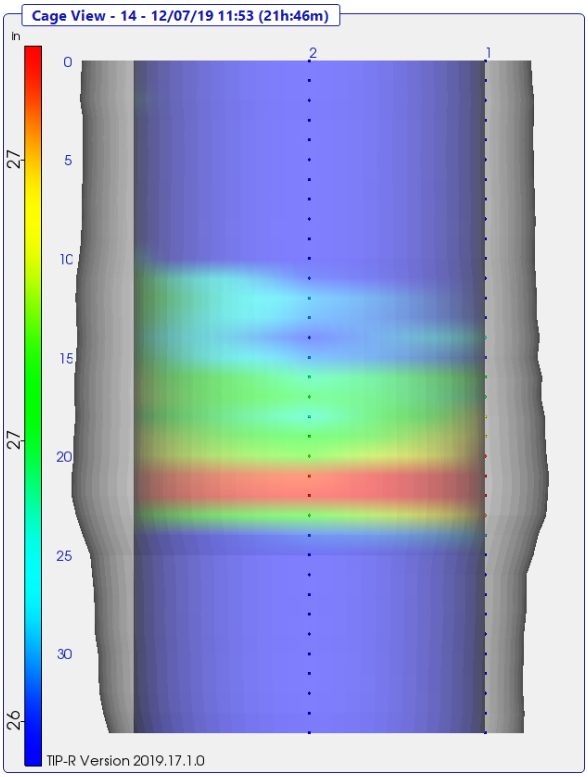

Forward Abutment Shaft 15

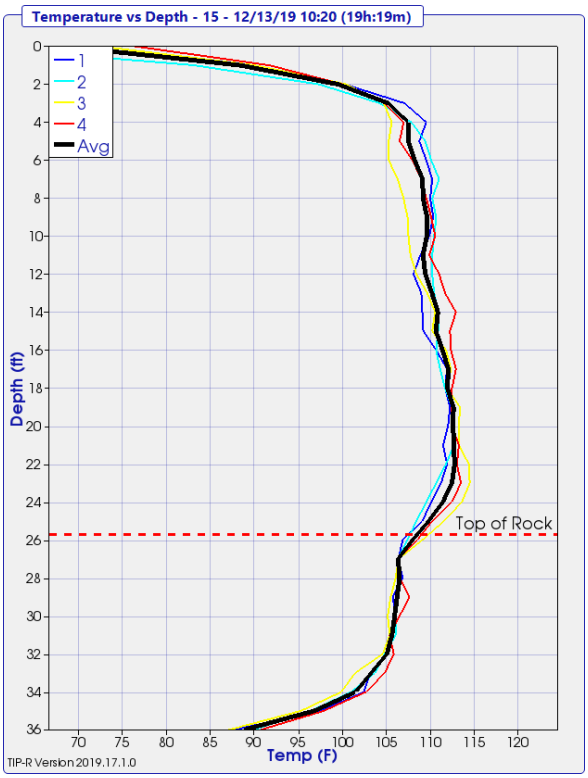

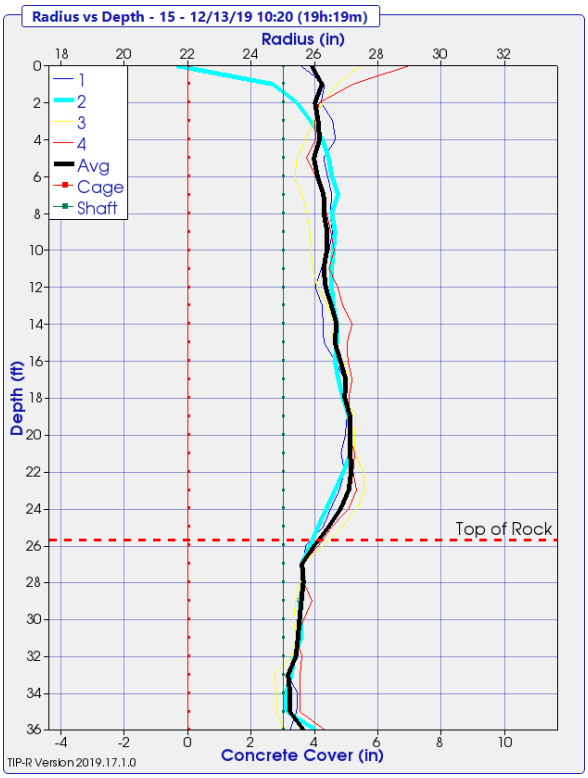

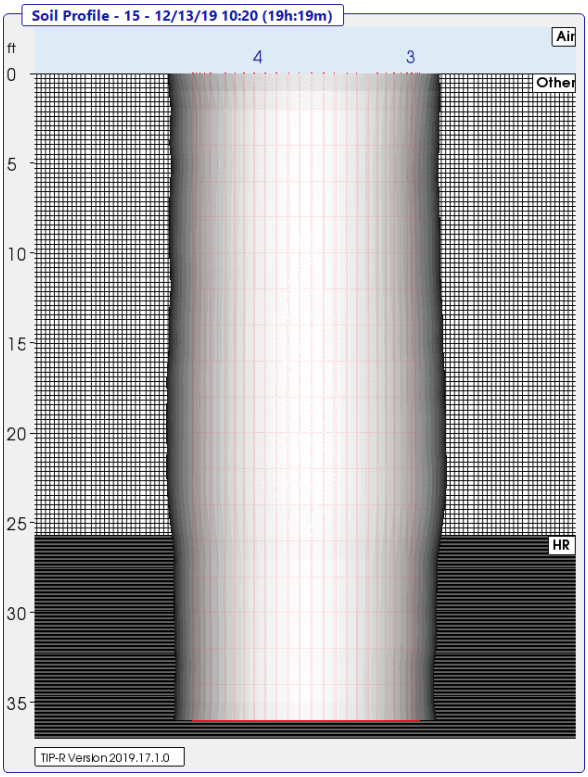

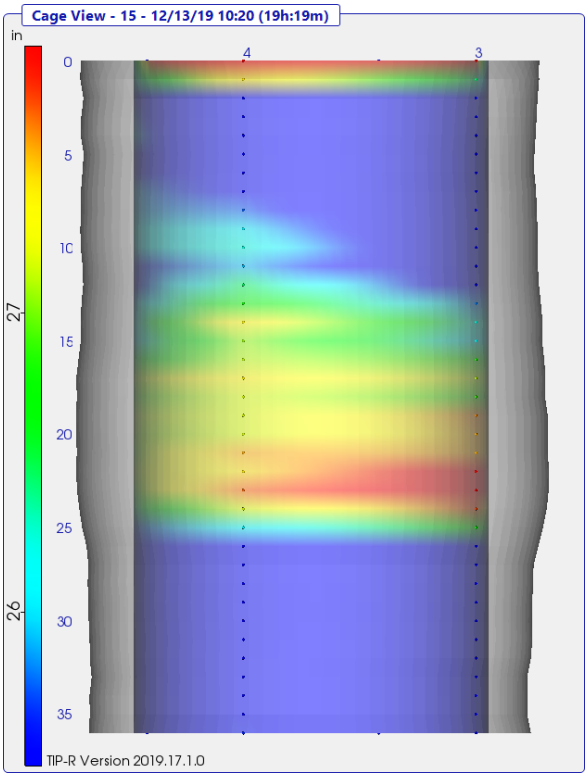

Forward Abutment Shaft 16

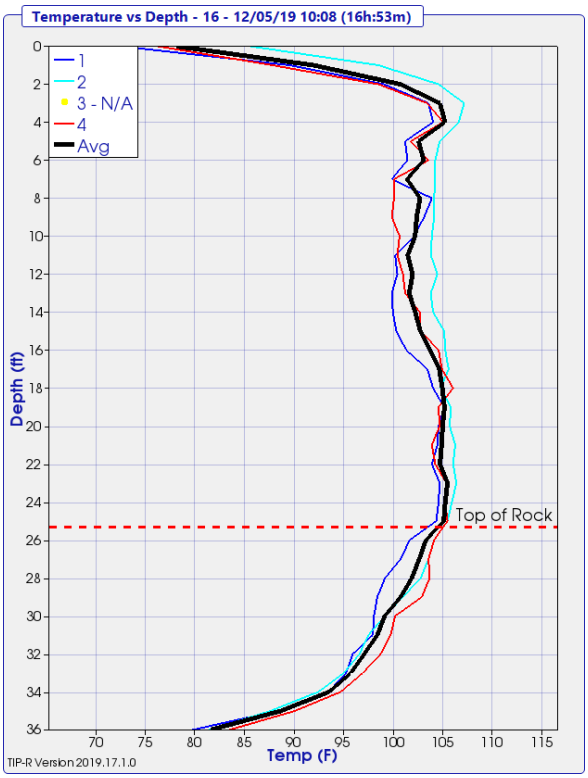

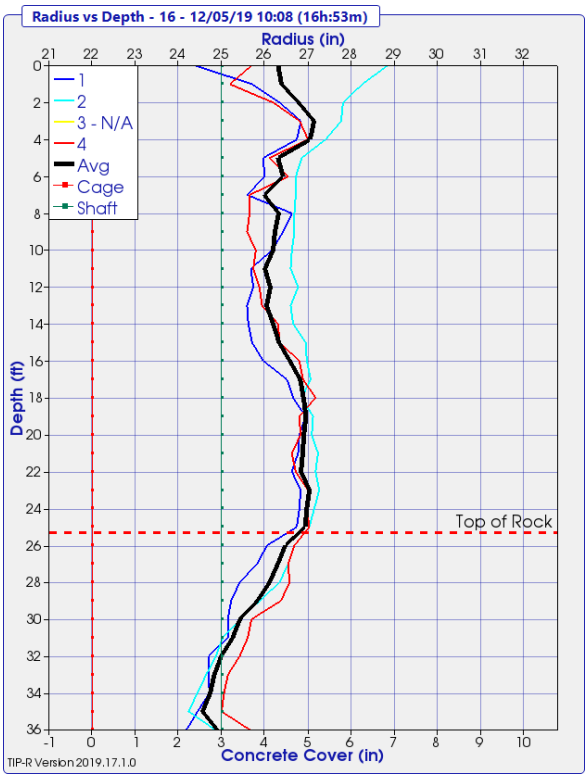

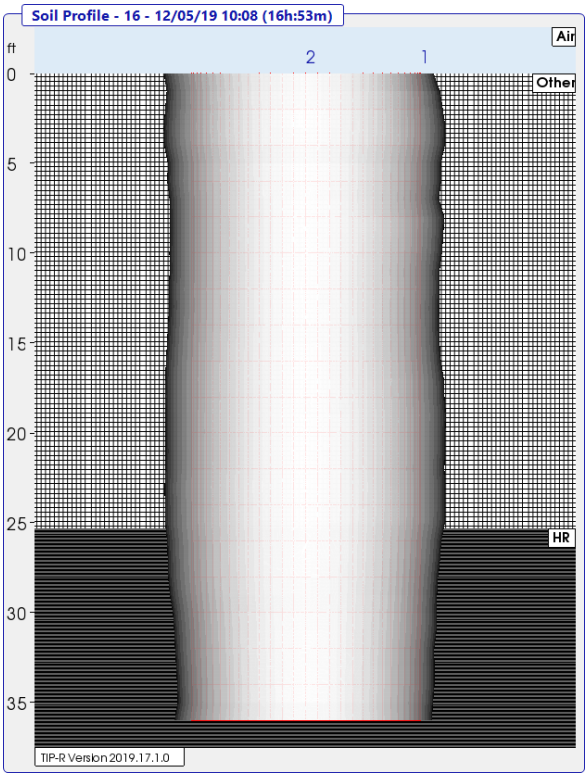

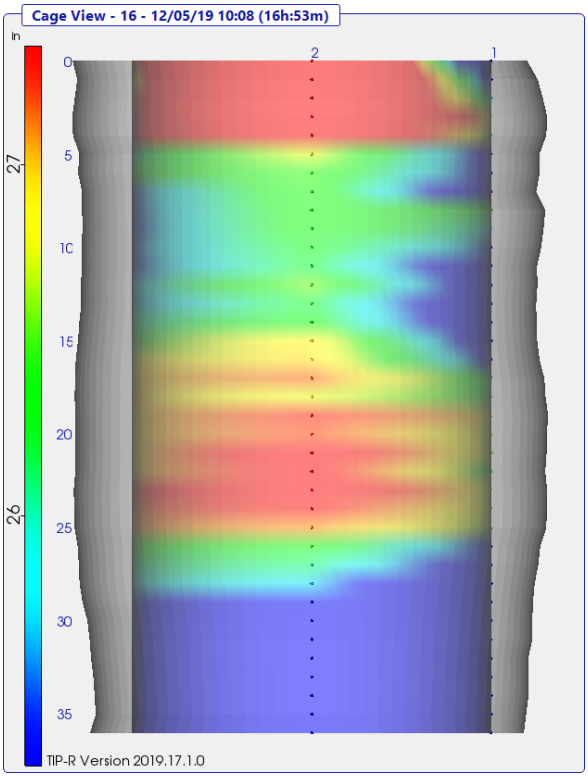

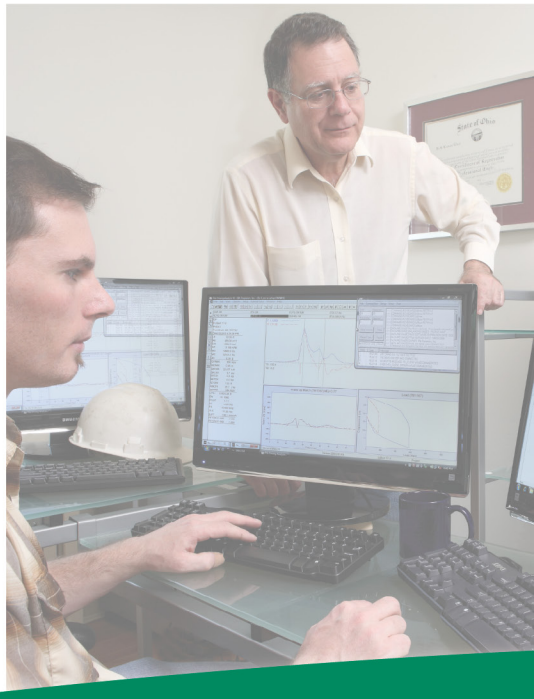

Job No. 195067-3

Cross-Hole Sonic Logging Report

Opportunity Corridor 3 CUY-10-0239

Prepared for: Kokosing Construction Co.

By: Benjamin White, P.E.
C. Michael Morgano, P.E.

December 11, 2019

GRL engineers, inc.
Dynamic Measurements and Analyses

www.GRLengineers.com info@GRLengineers.com

GRL engineers, inc.
Dynamic Measurements and Analyses

December 11, 2019

Mr. Marty Fritz
Kokosing Construction Company
886 McKinley Ave.
Columbus, OH 43222

Re: Cross-Hole Sonic Logging Report
Project: Opportunity Corridor 3 Bridge CUY-10-0239 – Pier 1 Shaft 20
Cleveland, OH

GRL Job No. 195067-3

Mr. Fritz:

This report presents results from Cross-Hole Sonic Logging (CSL) performed at the above referenced project on December 9, 2019. The objective of CSL testing is to evaluate the concrete and shaft construction quality. This report summarizes CSL testing results from Shaft 20 located in the Pier of Bridge CUY-10-0239.

A detailed description of the CSL equipment and testing procedures can be found in Appendix A, while the CSL testing results are presented in Appendix B.

CSL TESTING PROCEDURE

Four steel access tubes were cast into the shaft during concrete placement. The access tubes were labeled 1 through 4 with the number 1 tube corresponding to the northern most tube, and the remaining tubes identified in a clockwise direction. The CSL results are referred to as "Profiles" with profile 1-2 being the CSL results between tubes 1 and 2, etc. For each shaft, four perimeter profiles (1-2, 2-3, 3-4, 4-1) and 2 diagonal profiles (1-3 and 2-4) were scanned. The probes were placed at the bottom of the access tubes and then slowly raised together with signal transmission every 2 inches. The location or depth of the probes was electronically recorded by encoder wheels through which the probe cables were pulled.

CSL RESULT INTERPRETATION

The profiles present the signal arrival time and relative signal energy versus depth. In general, variations in arrival time of 20% are within the normal range for the CSL technique due to variation in probe location within the pipes, pipe alignment and other factors.

The interpretation of CSL testing is dependent on the signal first arrival time (FAT) and the signal strength received for each data set collected relative to the average FAT and signal strength. These are our proposed definitions for CSL results:

Satisfactory	FAT reduction 1 to 10% and Energy Reduction <6 dB
Anomaly	FAT reduction 11 to 20% and Energy Reduction <9 dB
Flaw	FAT reduction 21 to 30% <u>or</u> Energy Reduction of 9 to 12 dB
Defect	FAT reduction >30% <u>or</u> Energy Reduction >12 dB

Defects should be addressed if they affect more than one profile. Flaws should be addressed if they affect more than 50% of the profiles. “Addressing” a flaw or defect may include evaluation by tomography if the concern is localized (e.g. not across the full section), and/or, depending on the depth to the concern, additional measures such as core drilling, repair or replacement, repeat tests after a longer waiting time or testing by other methods (gamma-gamma, low strain, high strain).

CONCLUSIONS

Shaft 20

This shaft was reportedly installed December 3rd, 2019. CSL testing was performed on December 9th, or 6 days after this shaft was cast.

No FAT delays over 10% or energy decreases greater than 6 dB were observed in the CSL data. Therefore, based on the criteria presented, this shaft is free from any significant flaws or defects and its integrity can be classified as Satisfactory.

CSL LIMITATIONS

Uncertainties in the collected CSL results include variations in the concrete wave speeds, movement of the access tubes during concrete placement, and difficulties in record interpretation. Caissons with more tubes and thus more scans may result in a better analysis match with reality. We recommend that the responsible engineer(s) use the CSL results in conjunction with the soil borings, caisson construction records, and foundation loading information to determine foundation acceptability with respect to design requirements. CSL results alone should not be used as the sole basis for caisson acceptance or rejection, without additional data to support such conclusions.

We appreciate the opportunity to be of assistance to you on this project. Please do not hesitate to contact us if you have any questions regarding this report, or if we may be of further service.

Respectfully,
GRL Engineers, Inc.

Benjamin White, P.E.

C. Michael Morgano, P.E.

Appendix A

Description of the CSL Method and the CHA Equipment

APPENDIX A
DESCRIPTION OF THE CSL METHOD AND THE CHA EQUIPMENT

The following has been written by GRL Engineers, Inc. and may only be copied with its written permission.

1. CSL INSTRUMENTATION

GRL performs the Crosshole Sonic Logging (CSL) according to the specifications of ASTM D6760-02 using the Cross Hole Analyzer™ (CHA) system manufactured by Pile Dynamics, Inc. The CHA system is applied to shafts, which are equipped with at least two inspection tubes. The tubes are either made of steel or plastic and must be filled with water during curing to promote proper bonding of the tube with the concrete and during testing to couple the signal to the concrete. In one of the water filled tubes, a transmitter probe is lowered and simultaneously a receiver probe is lowered in the second tube, normally to the same level as the transmitter tube. The CHA then generates an electric pulse. For typical CSL applications, the frequency of the signal generated is above the audible limit (around 45 kHz for the CHA) and therefore ultrasonic. The stress wave travels through the water, the tube and the concrete and is then received by the receiver probe as an electrical signal. The wave transmission proceeds at the speed of sound in the concrete (typically between 3,000 and 4,000 m/s or between 10,000 and 13,000 ft/s) and CSL is therefore often called a sonic test. The received signal is amplified, converted to digital form at a rate of 500 samples per millisecond, and then digitally stored and displayed by the CHA. The total record length is either 256 or 512 samples and, therefore, is a ½ or 1 millisecond total duration. For longer tube spacing the wave travel time may exceed this time sample, so the CHA operator selects a **Time Delay (TD)** following the transmitter signal emission so that the leading edge of the pulse is included in the digitized record.

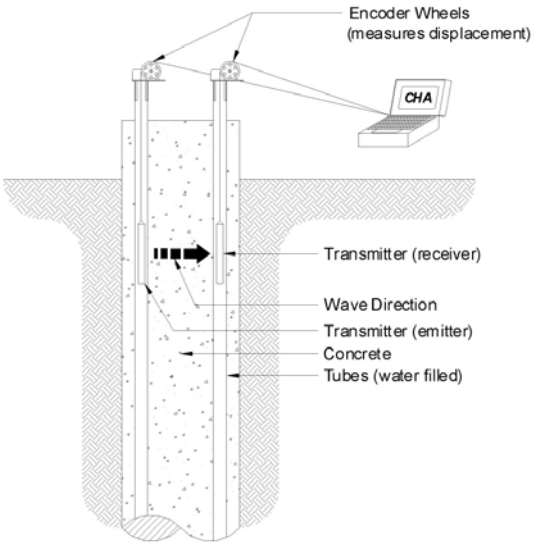

Figure 1 Typical cross-hole setup

While recording the received signal, the CHA measures the **Depth** of the transmitter and receiver by means of individual digital encoders. This depth measurement is normally done relative to the tube top or the tube bottom. Typically, transmitter and receiver are simultaneously raised and, in intervals of 1 or 2 inches (user selectable), signals are emitted and recorded.

As an alternative to Crosshole Sonic Logging, **Single-Hole Sonic Logging (SSL)** is sometimes a preferable solution, particularly for small diameter shafts. In this case the transmitter and receiver are lowered at a fixed vertical distance into the same water filled access tube. To avoid misinterpretations, the tube has to be made of plastic for this application. Many of the features of the resulting scans can be obtained and interpreted as for CSL, however, since this method is less seldom used, it is not described in further detail since the principles are identical to CSL.

2. PRESENTATION OF RESULTS

Historically, the display of the records is done in the so-called **Waterfall Diagram**. This presentation shows in a binary fashion the positive records components dark and the negative record components white as a function of time. The vertical extent of each record is exactly the distance

over which records are collected (approximately the length of tubes in the shaft). The waterfall diagram is an intuitively clear representation of concrete quality over depth. Normally the test is repeated for all perimeter tube pairs and also at least the major diagonals to investigate the concrete quality and homogeneity between the tubes.

The most important result from the CHA is the first arrival time (**FAT**) of the signal at the receiver, relative to the time the transmitter pulse has been generated. FAT can be determined visually from the waterfall diagram or it can be automatically determined. In the CHA, FAT is recognized when the signal in the receiver exceeds both some absolute threshold and a certain, user selectable, percentage of the maximum signal.

If the distance between the tubes is known, then a **Wave Speed** can be calculated from FAT and the tube spacing. The wave speed in the concrete can indirectly assess the concrete quality. This wave speed is subject to a variety of potential error sources and therefore should be used with caution when judging the quality of shaft concrete. For example, the wave speed depends not only on the wave speed in the concrete but it also depends on the wave speed in water (which is known and can be corrected for) and tube and, therefore, in the location of the sensor within the tube (tubes are typically twice as large as the sensor diameters). Probes therefore are used with "centralizers" to keep the probe in the center of the tube. The greatest error source is however, the unknown distance between the tubes which can only be measured at the shaft top. Tube spacings often vary with depth, particularly for the plastic PVC tubes. The CHA software allows for the plotting of either FAT or Wave Speed.

The signal strength is evaluated by digital integration over time of the absolute value of the signal. The duration of the signal integration is typically in the range of 10 to 20 samples (although for longer samples, the shape of the curve usually is similar). The result of this integration is called the signal **ENERGY**. There are no absolute values of energy that can be used for concrete quality assessment, however, a local relative reduction of "energy" by more than a factor of 10 usually indicates a serious relative reduction of concrete quality. For example, if energy is significantly lower at a certain depth between two neighboring tubes on the shaft's periphery and not in the interior of the pile, then the concrete cover of the shaft has a reduced quality.

The CSL results may be evaluated for shaft integrity and concrete homogeneity. Shaft integrity may be identified by a consistent wave arrival travel time (FAT) between access tubes. When the arrival signal is delayed, lower quality concrete due to mixing with drilling slurry, honeycombing, or soil inclusions may be present. Delayed signal arrival could also be the result of slow curing or poorer quality concrete. A complete loss of signal generally indicates significant defects in the concrete between access tubes such as caving of the surrounding soil, or a void in the shaft.

3. RESULT INTERPRETATION

Quantitative evaluations of shaft quality based on CSL measurements often involve judgment and experience. The CHA "defect analysis" locates local deviations (and thus compensates for non-parallel tubes) with significant delays in FAT or significant reductions in relative energy. The following can be concluded from the CHA results.

The **vertical extent** of a concrete quality change is easily measured in the vertical display of FAT, wave speed, energy or waterfall diagram.

The **horizontal extent** of a defect or the percentage of cross sectional area affected has to be estimated from the various profiles showing the same defect. If the defect is located in only some tube profiles, offsetting the probes vertically and repeating the test may help locate the defect's horizontal position.

Th.e **severity** of the change in concrete quality is generally judged from the relative change of FAT. The severity of the change in concrete quality also should involve an assessment of the relative energy, however, in a more qualitative rather than quantitative manner. Large reductions in energy (e.g. factor of 10 or more) generally are sure

indications of major problems, though smaller reductions also may indicate problems.

The rating of the shaft integrity considers the increase in “first arrival time” (FAT) and the energy reduction relative to the arrival time or energy in a nearby zone of good concrete. The average wavespeed across the main diagonals shall be at least 10,000 ft/sec. The evaluation of the concrete from the CSL test will generally follow the criteria:

Satisfactory (G) (Good)
FAT increase 0 to 10% and
Energy Reduction < 6 db

Anomaly (Q) (Questionable)
FAT increase 10 to 20% and
Energy Reduction of < 9 db

Flaw (P/F) (Poor/Flaw)
FAT increase 20 to 30% **or**
Energy Reduction of 9 to 12 db

Defect (P/D) (Poor/Defect)
FAT increase >30% **or**
Energy Reduction > 12 db

Defects must be addressed if they affect more than the one profile. Defects covering the entire cross section define a full layer defect. Flaws must be addressed if they affect more than 50% of the profiles. Defects or Flaws covering the entire cross section may require repair. Addressing means as a minimum an evaluation by tomography if the concern (Flaw or Defect) is localized (e.g. not across the full section), and/or, depending on the depth to the concern, additional measures like excavation, core drilling, repair or replacement, or repeat tests after a longer waiting time.

4. DISCLAIMER

As with most Non-Destructive methods of pile material testing, results are not always a clear indication of the strength of a shaft. A variety of error sources or limitations can mask some of the defects (e.g. the quality of the concrete that is not in the path of the stress waves between tubes) while exaggerating others (a tube de-bonded from the surrounding concrete might yield a severely reduced signal strength.) It is therefore suggested that the CSL results are always used together with other records of shaft installation and that they are not used as the sole basis for shaft rejection or shaft acceptance. In general, the access tubes are attached to the inside of the reinforcing cage. The CSL tests only the concrete between the tubes and thus generally cannot evaluate the concrete cover for the cage. If a defect is not on a direct path between tubes, some controlled tests suggest that the defect would not be detected.

5. CORRECTIVE MEASURES

A limited number of corrective measures are available when a defect is indicated by the CSL method. Such measures include:

- Static load testing to prove the shaft integrity to be adequate. This is often the most expensive alternate and not well suited for testing large numbers of shafts.
- Dynamic Load Testing (DLT) with a Pile Driving Analyzer® which would yield evidence of satisfactory shaft performance under the dynamic load, which is typically in the range of the shaft’s service loads.
- Sonic Pulse Echo testing with the Pile Integrity Tester™ (PIT) as an additional method of non-destructive testing. PIT, for example, could resolve whether or not a simple de-bonding or a more severe defect has caused a reduced Energy or increased FAT.
- Coring of the shaft (probably the most widely accepted additional inspection method). Besides yielding a concrete core, video cameras can be used in the cored hole for a visual inspection of the shaft concrete.
- Repair by grouting high strength reinforcement bars in the access tubes. This is only possible if the tubes are made of steel.
- Pressure grouting the shaft either by piercing the tubes or by cored access holes.

Appendix B

CSL Results

GRL Engineers, Inc.
Shaft 20 CSL

1
Tube Number=1-3 (F0,3)
L=45.10 ft
Spacing=38.0 in
Gain=800
12/9/2019 09:48

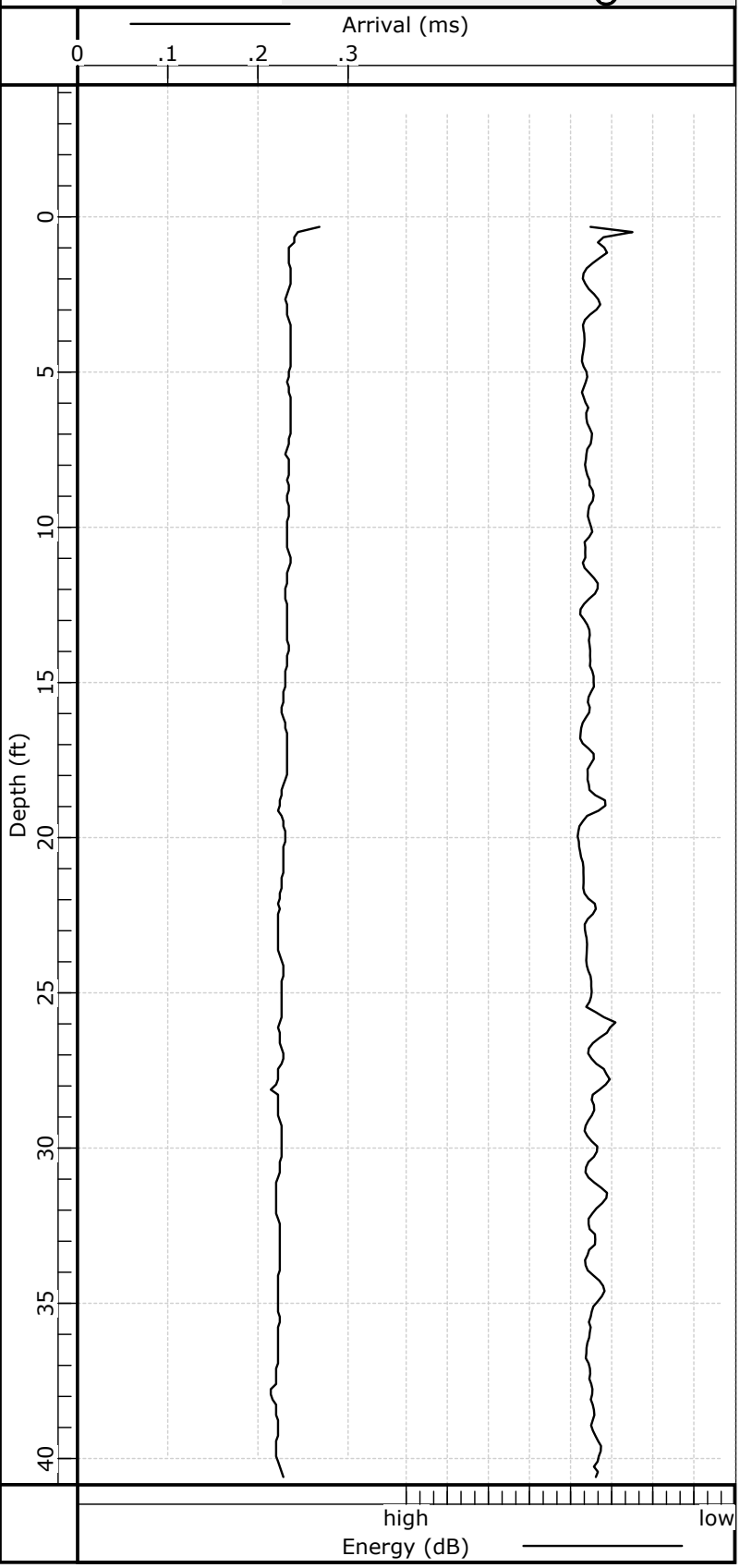

1
Tube Number=1-3
L=45.10 ft
Spacing=38.0 in
Gain=800 (x16)
12/9/2019 09:48

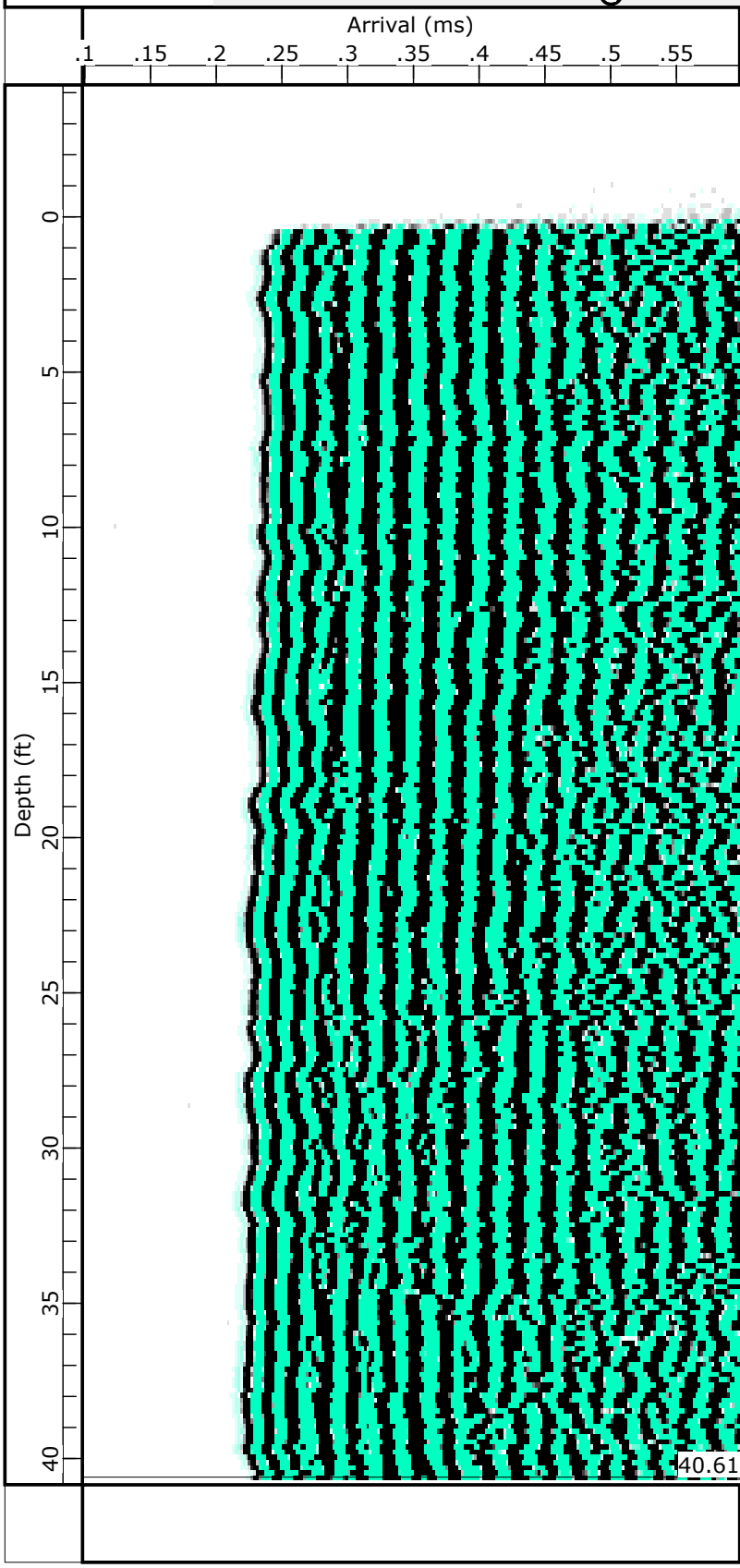

GRL Engineers, Inc.
Shaft 20 CSL

1
Tube Number=1-4 (F0,3)
L=45.10 ft
Spacing=19.0 in
Gain=550
12/9/2019 09:48

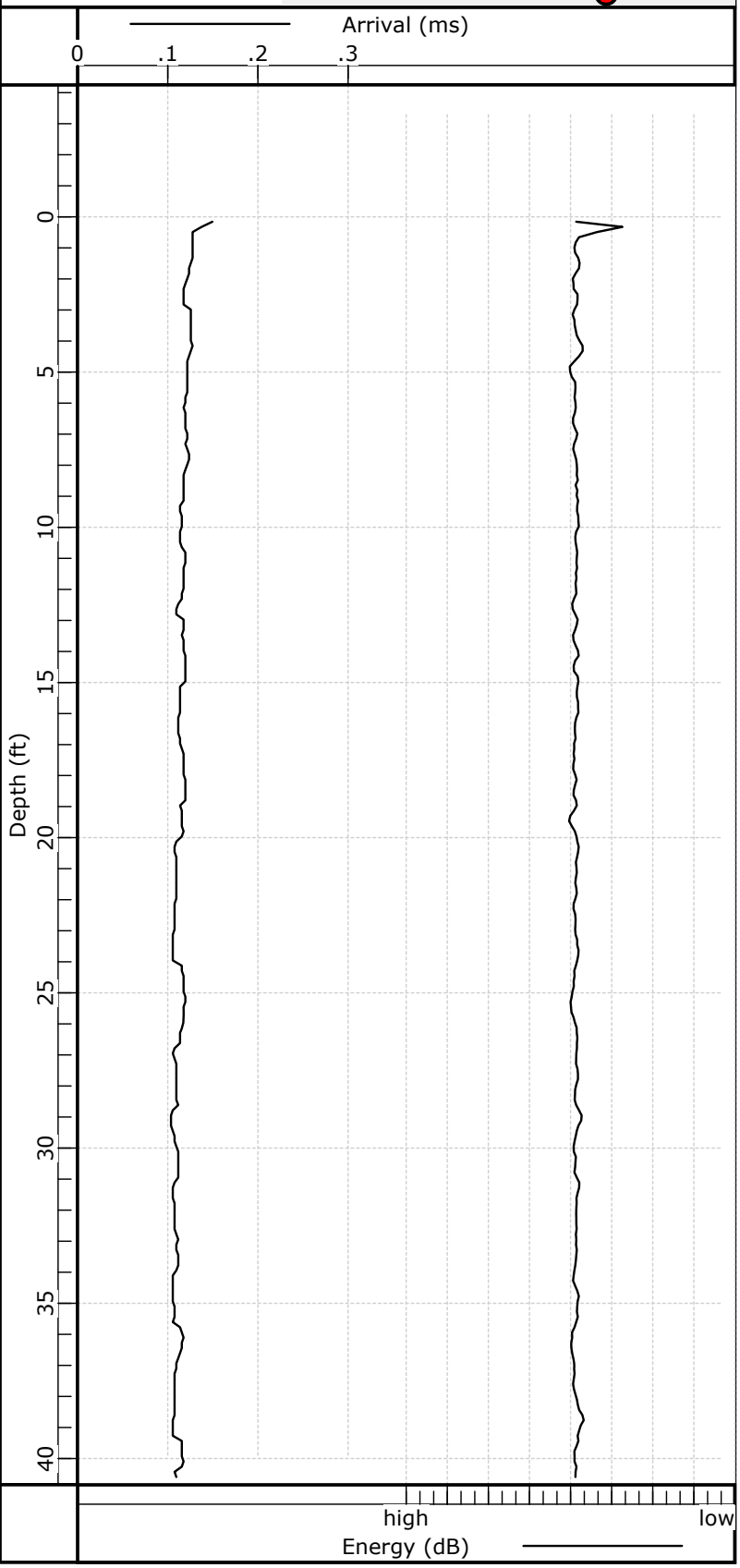

1
Tube Number=1-4
L=45.10 ft
Spacing=19.0 in
Gain=550 (x16)
12/9/2019 09:48

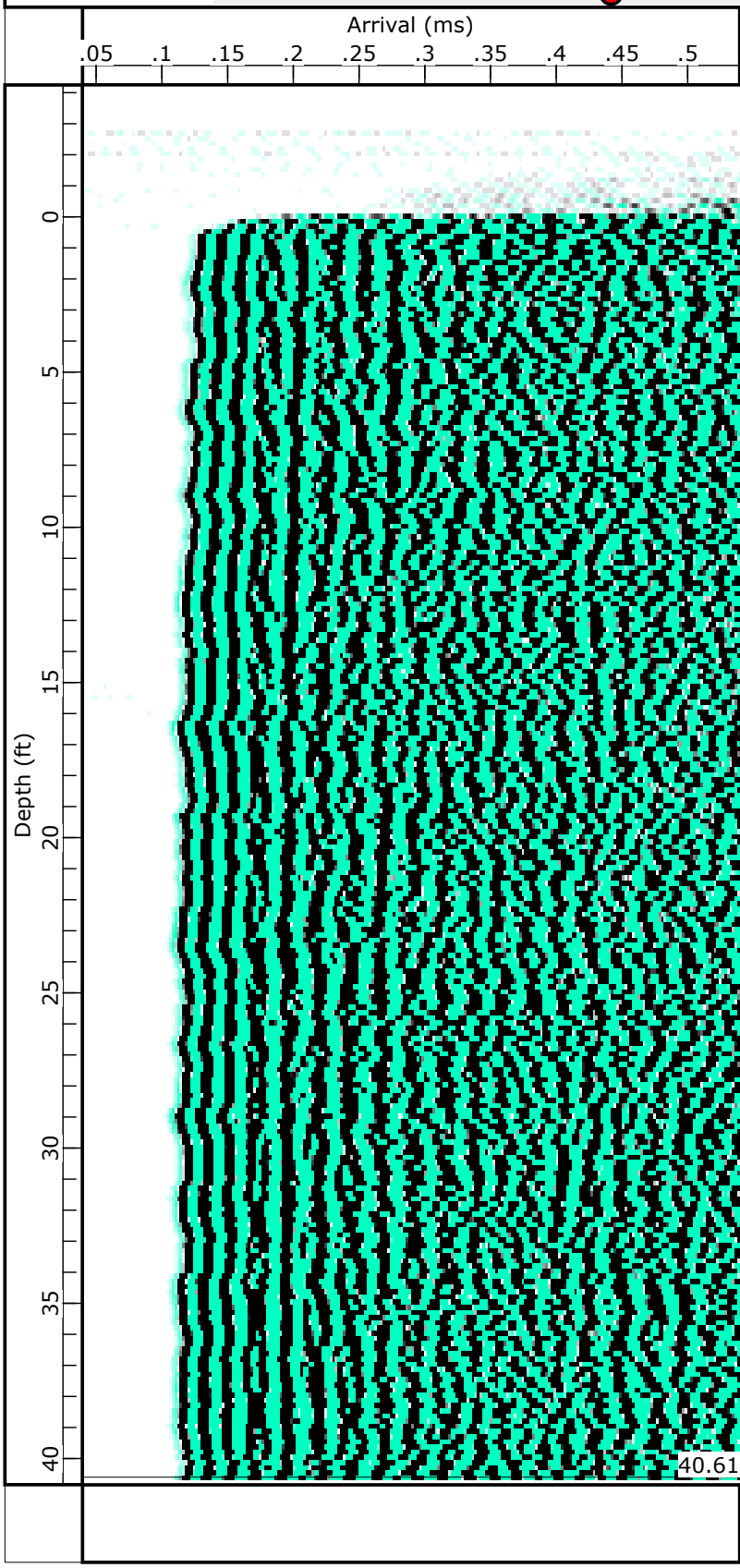

GRL Engineers, Inc.
Shaft 20 CSL

1
Tube Number=2-3 (F0,3)
L=45.10 ft
Spacing=29.0 in
Gain=550
12/9/2019 09:48

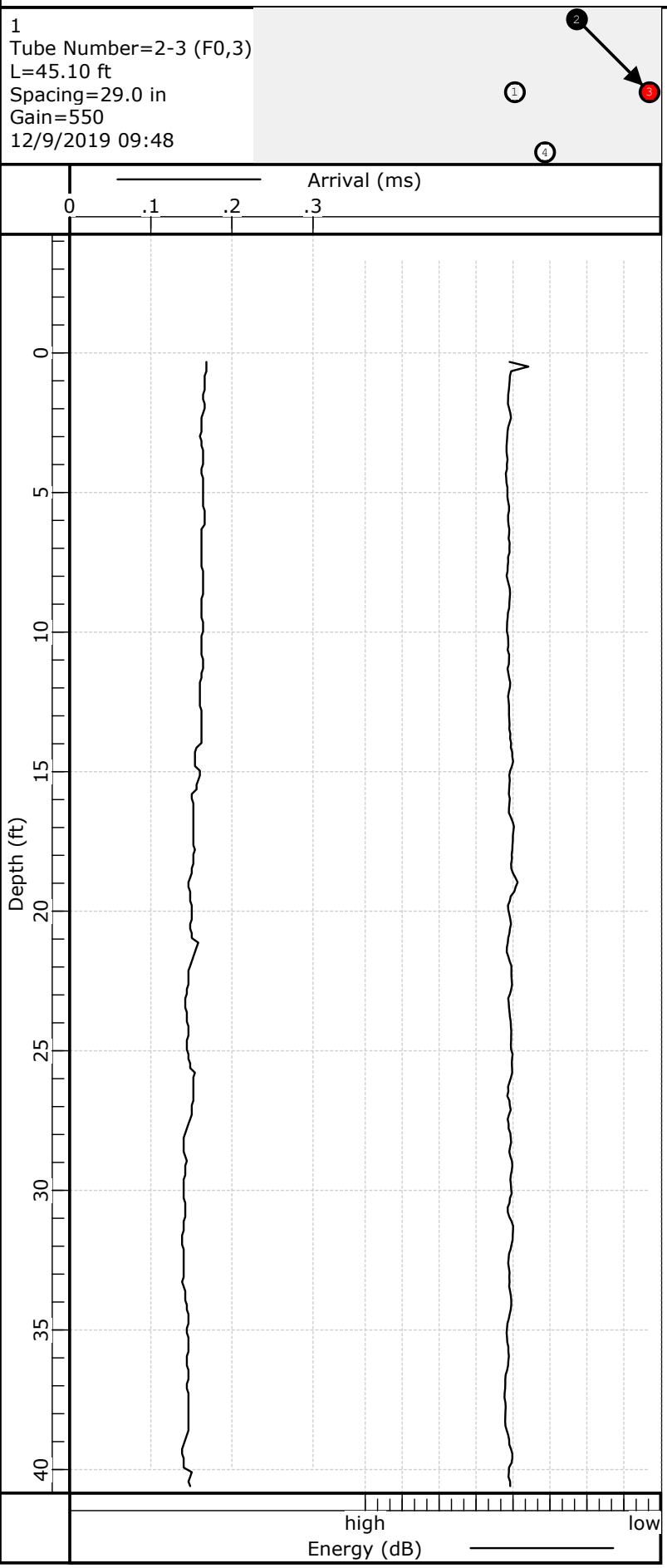

1
Tube Number=2-3
L=45.10 ft
Spacing=29.0 in
Gain=550 (x16)
12/9/2019 09:48

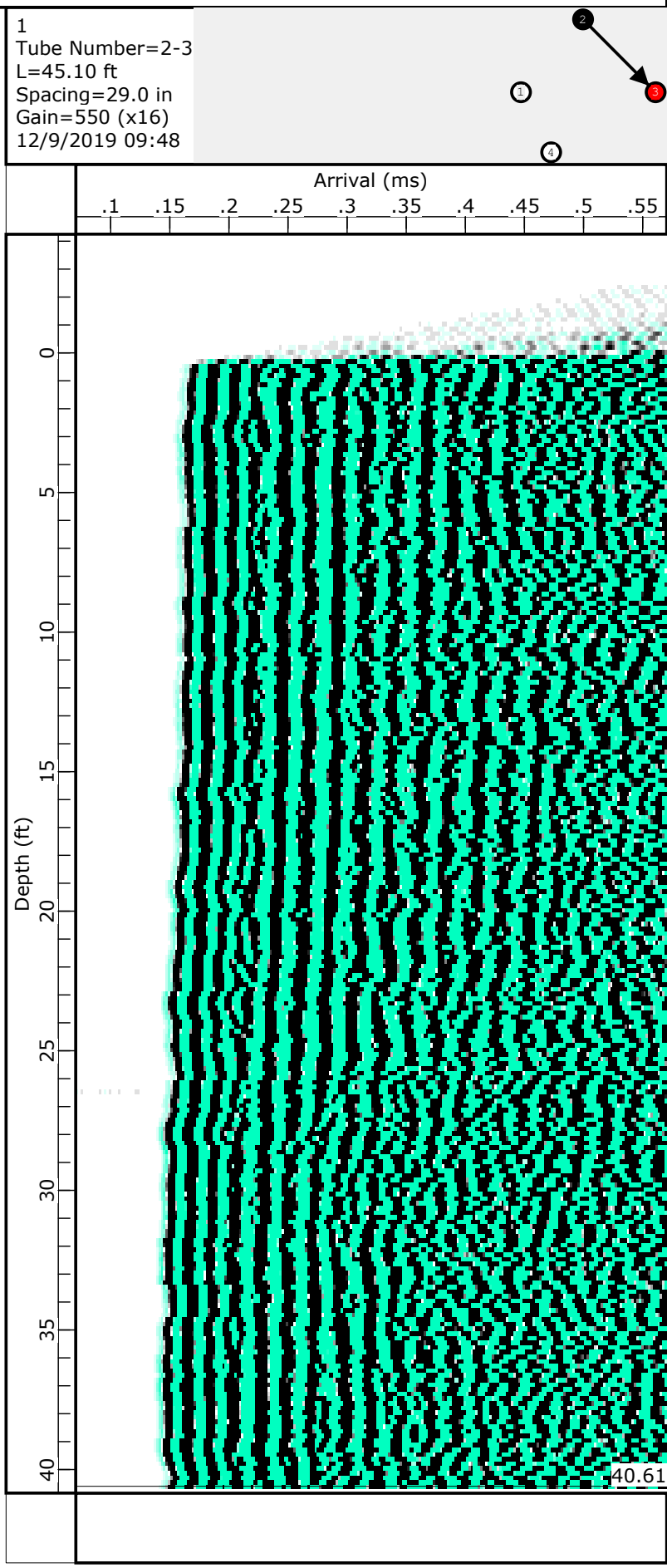

GRL Engineers, Inc.
Shaft 20 CSL

1
Tube Number=2-4 (F0,3)
L=45.10 ft
Spacing=38.6 in
Gain=800
12/9/2019 09:48

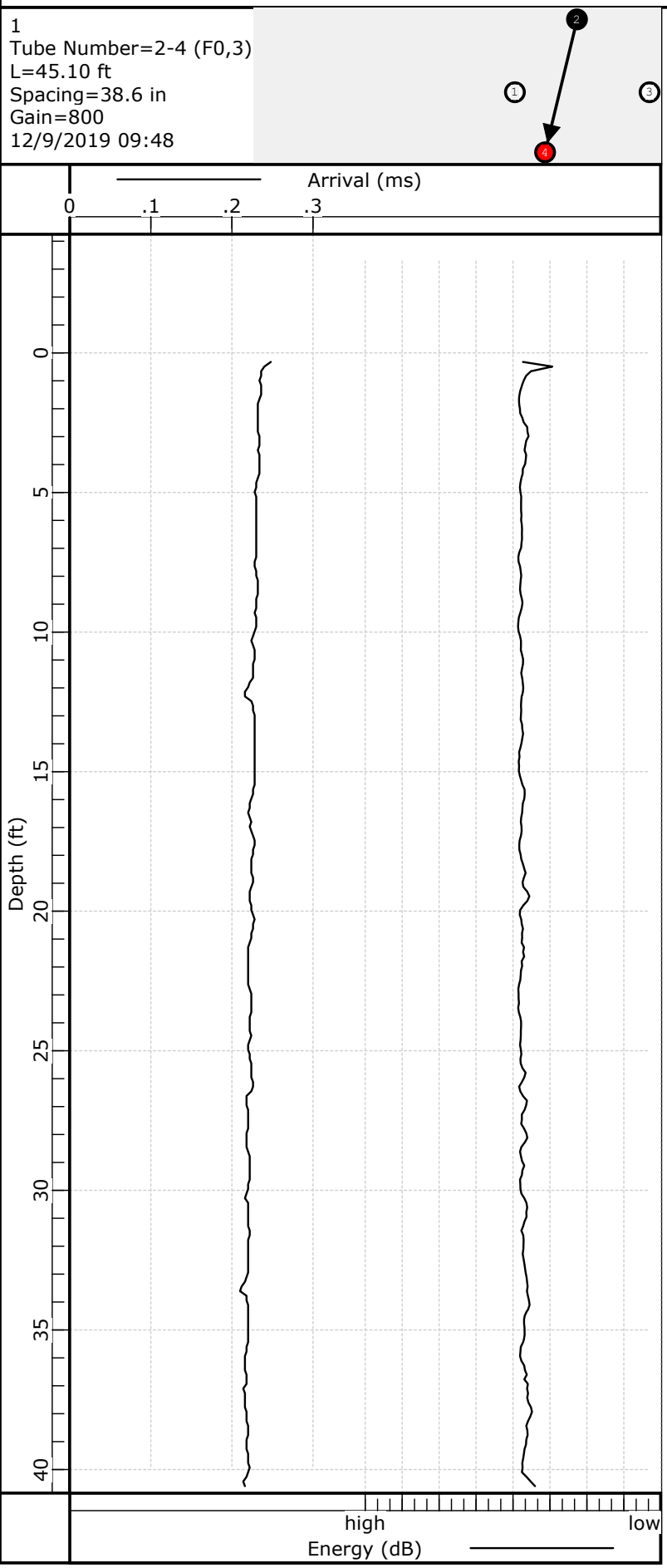

1
Tube Number=2-4
L=45.10 ft
Spacing=38.6 in
Gain=800 (x16)
12/9/2019 09:48

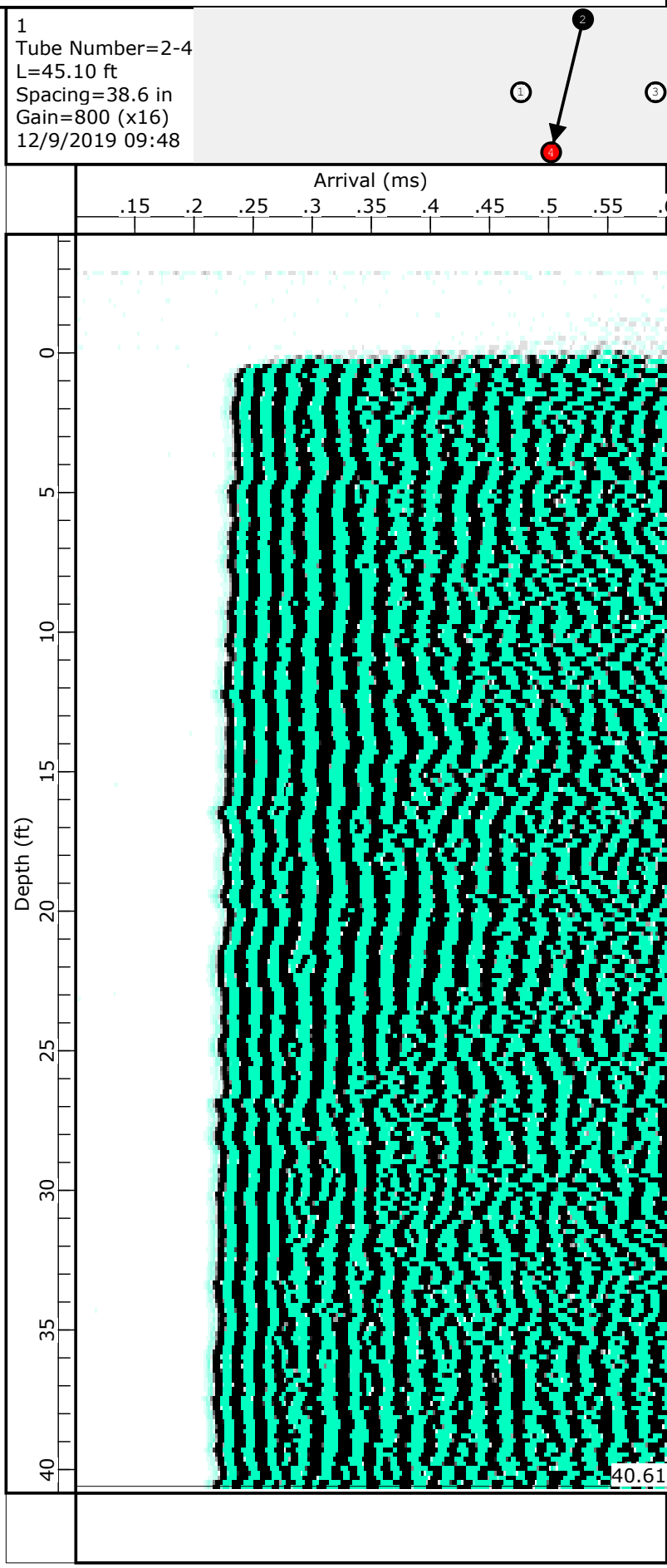

GRL Engineers, Inc.
Shaft 20 CSL

1
Tube Number=4-3 (F0,3)
L=45.10 ft
Spacing=34.0 in
Gain=275
12/9/2019 09:48

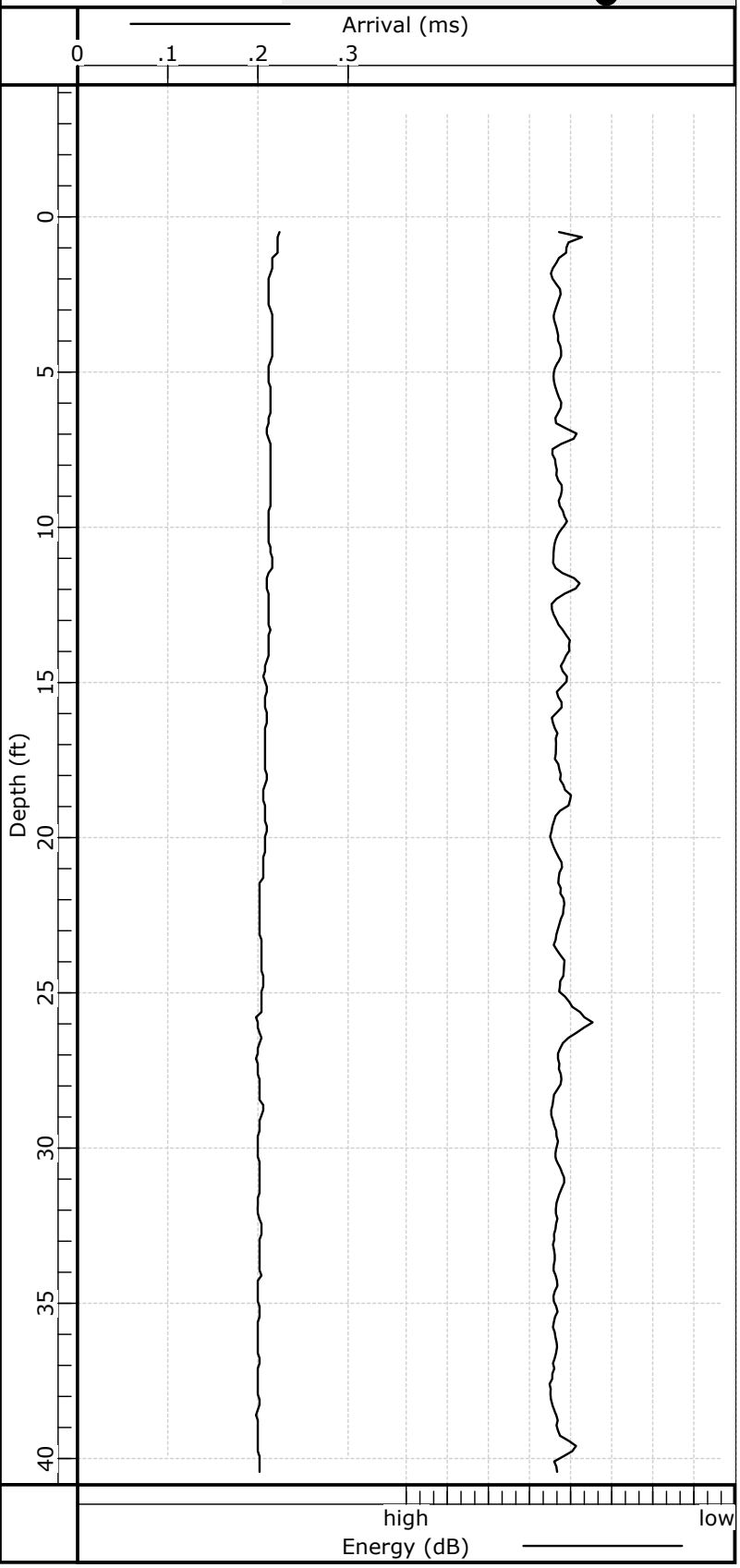

1
Tube Number=4-3
L=45.10 ft
Spacing=34.0 in
Gain=275 (x16)
12/9/2019 09:48

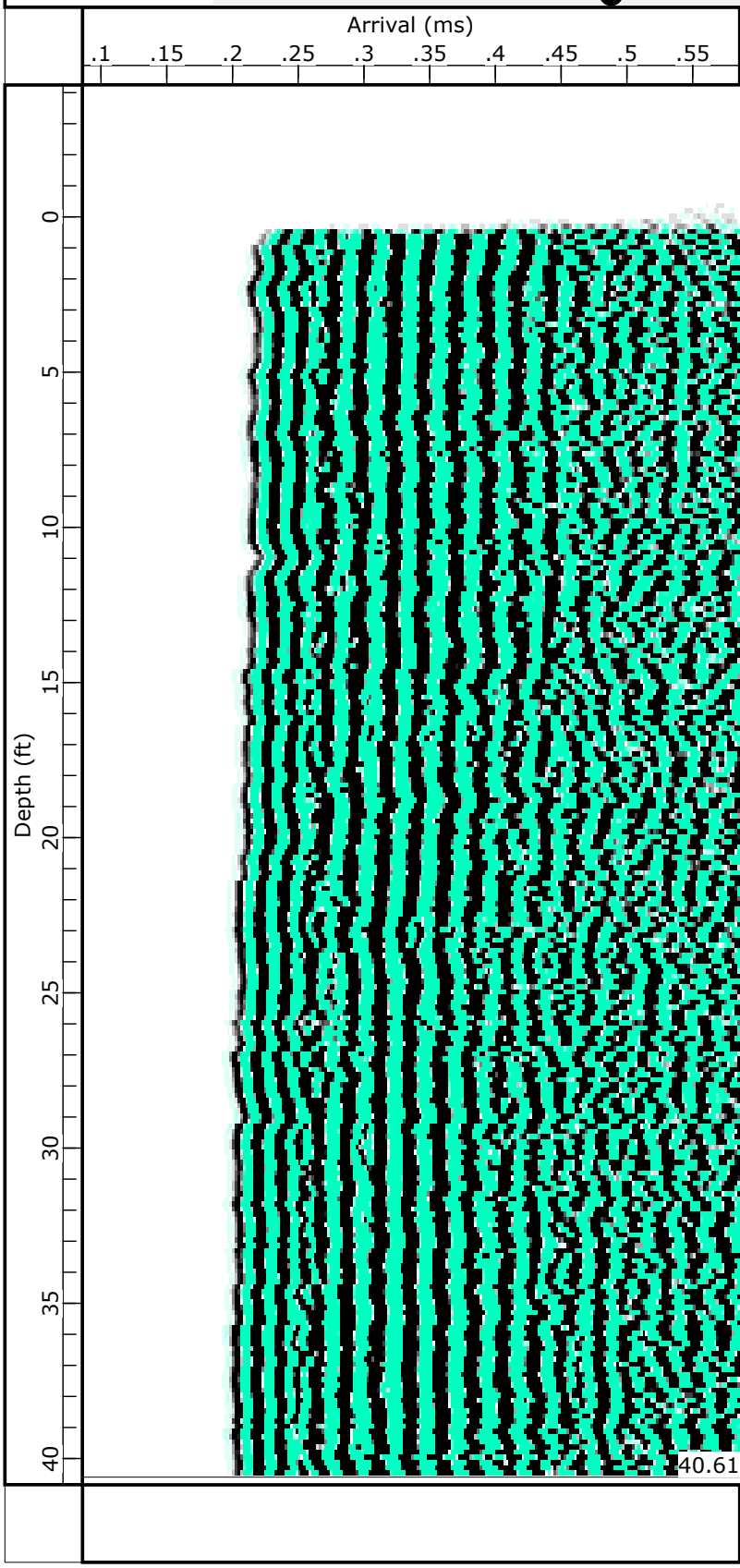

GRL Engineers, Inc.
Shaft 20 CSL

1
Tube Number=1-2 (F0,3)
L=45.10 ft
Spacing=27.0 in
Gain=275
12/9/2019 09:48

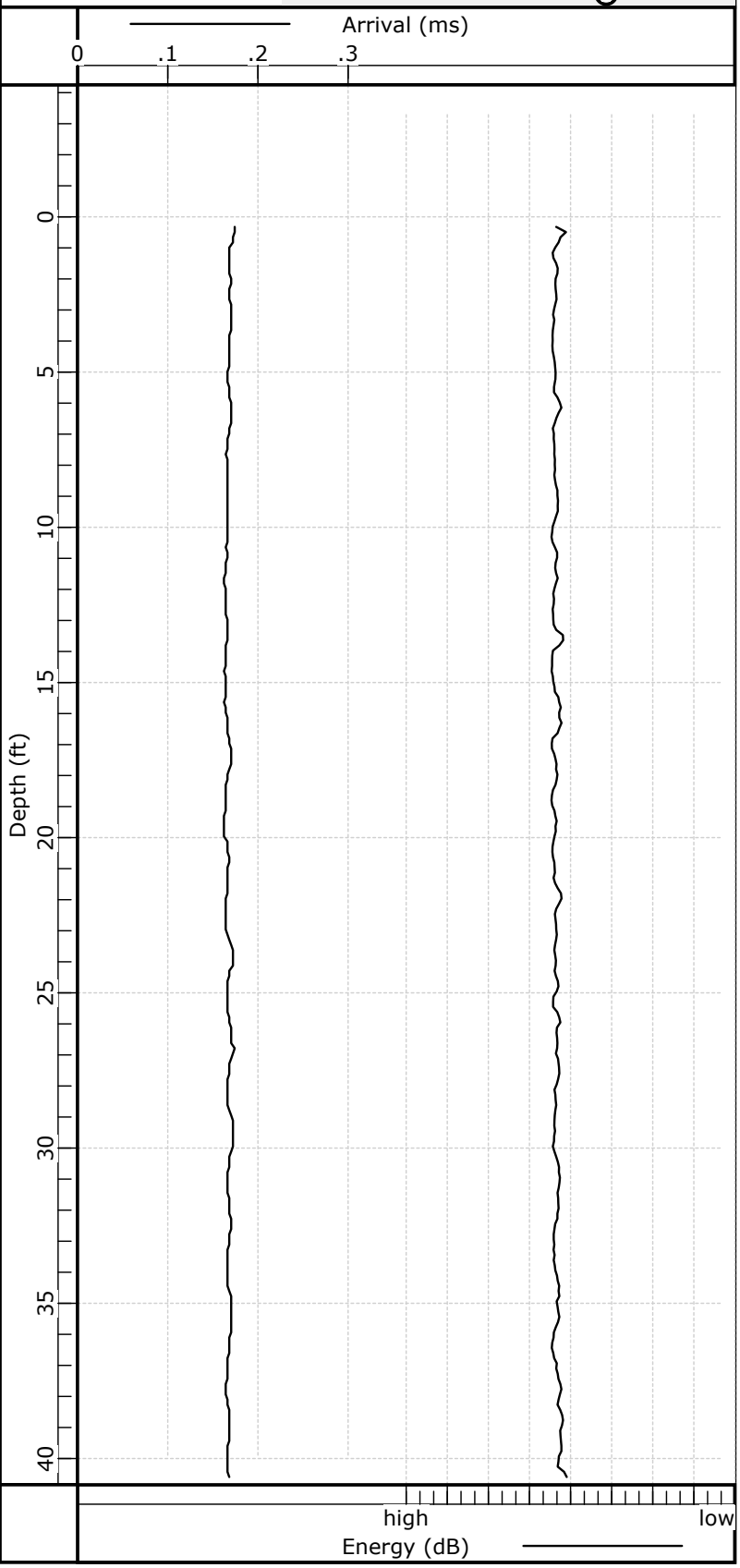

1
Tube Number=1-2
L=45.10 ft
Spacing=27.0 in
Gain=275 (x16)
12/9/2019 09:48

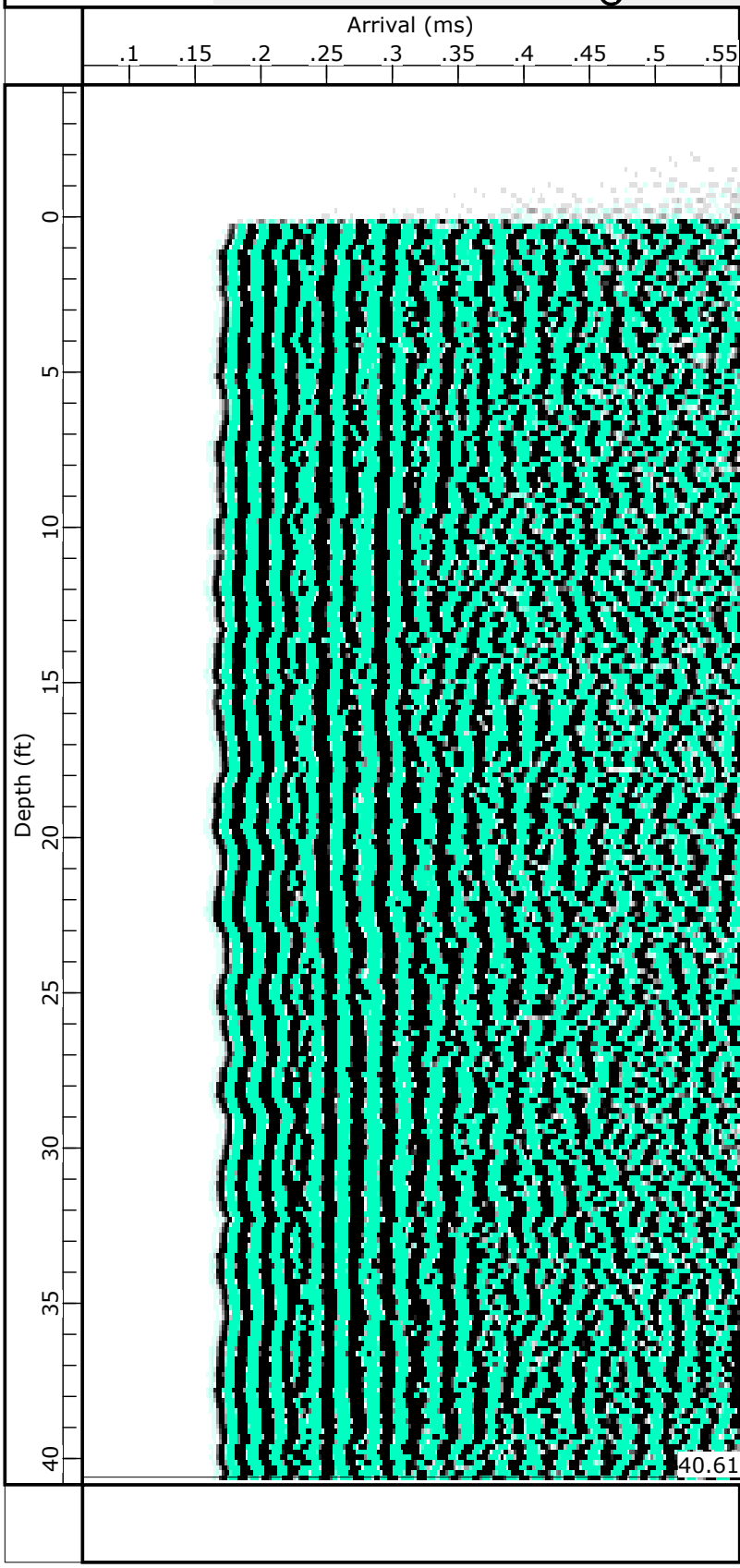

Pile	Prof	Distance in	Avg AT ms	Avg WS ft/sec	Standard Dev.	Discrete Coeff.	Max PSD
1	1-3	38.0	0.223	14198	123	0.028	
1	1-4	19.1	0.109	14592	285	0.064	
1	2-3	29.0	0.153	15777	192	0.040	
1	2-4	38.6	0.219	14705	120	0.027	
1	4-3	34.1	0.202	14055	127	0.030	
1	1-2	27.0	0.163	13845	70	0.017	

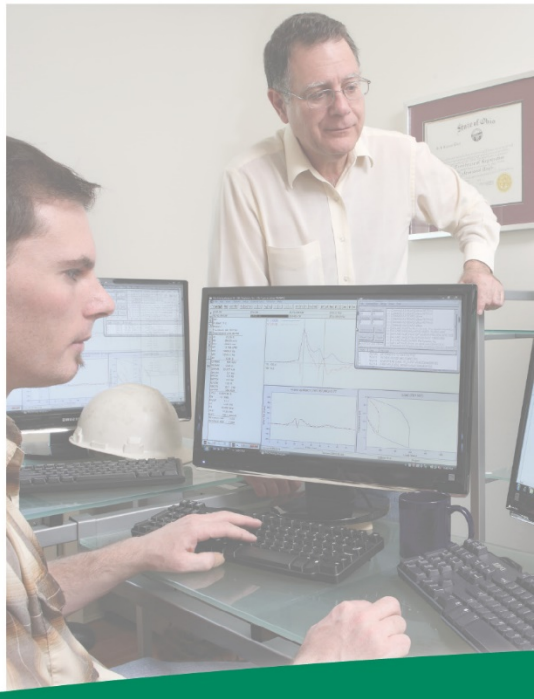

Job No. 195067-9

Report on: Thermal Integrity Profiling

Project: Opportunity Corridor 3 CUY-10-2039

Cleveland, OH

Prepared for: Kokosing Construction Company

By: Benjamin White, P.E.
Matthew Perrella

December 17, 2020

GRL engineers, inc.
Dynamic Measurements and Analyses

www.GRLengineers.com info@GRLengineers.com

December 17, 2020

Mr. Marty Fritz
Kokosing Construction Company
886 McKinley Ave.
Columbus, OH 43222

Re: Thermal Integrity Profiling Report
Project: Opportunity Corridor 3 Bridge CUY-10-0239 – Phase 2 Shafts
Cleveland, OH

GRL Job No. 195067-9

Mr. Fritz:

This report presents the results of Thermal Integrity Profiling (TIP) using Thermal Wire® cables for the above-referenced project. The objective of TIP testing was to assess the integrity of 13 drilled shafts in the phase 2 construction of the CUY-10-0239 structure which carries OH-10 over the Norfolk Southern RR. The TIP data summarized in this report was recorded between December 4th and 17th, 2020.

THERMAL INTEGRITY PROFILING – INSTRUMENTATION AND ANALYSIS

Thermal Integrity Profiler (TIP) testing was performed by means of Thermal Wire® cables and Thermal Acquisition Ports (TAPs). The TIP system, manufactured by Pile Dynamics, Inc. in association with FGE, reads concrete temperatures during curing using cables embedded in the concrete.

The Thermal Wire cables consist of temperature sensors spaced every foot along the length of a cable. For these shafts, four Thermal Wire® cables were attached along the full length of the reinforcing cage. After the concrete placement was complete, a TAP-EDGE data logger was connected to each wire and data acquisition began.

During curing of the concrete, the hydrating cement generates heat, increasing the temperature in the shaft. Every 15 minutes the TAP-EDGE data loggers automatically record the measured temperature at each sensor location along the length of the wire, generating a profile of temperature versus depth at each increment of time. The data is then sent to a cloud server where GRL can access the data. After the concrete peak temperature has been achieved, the data is downloaded for further analysis.

The TIP results may be evaluated for shaft shape and integrity, concrete quality, and for location of the reinforcing cage. The overall average temperature for all Thermal Wire readings over the embedded depths can be directly related to the overall volume of concrete installed. Pile integrity may be assessed based on the average temperature measurements from each Thermal Wire at each depth increment. If the measured average temperature versus depth is consistent, the shaft is considered to be uniform in shape and quality. Bulges can be identified as localized increases in average temperature, while insufficient concrete quality or cross section reductions can be identified as localized decreases in average temperature. Anomalies present over more than ten percent of the effective cross-sectional area are normally seen in multiple Thermal Wires at the same depth. Because soil and/or slurry pockets produce no heat, areas of soil intrusion or inclusion are indicated by lower local temperatures.

Appendix A provides additional information regarding the technical background and implementation of the TIP drilled foundation integrity testing method.

SHAFT DETAILS

Please refer to the construction records for complete details.

GRL Engineers was provided shaft information through field logs which are attached in Appendix B for reference. The reported shaft lengths and details are summarized in Table 1.

Table 1. Reported Shaft Installation Details

Shaft Number	Concrete Placement Date	As-Built Shaft Diameter Shaft/socket (in)	Rebar Cage Diameter (in)	Reported Total Shaft Length (ft)	Concrete Volume Input for Analysis (yd^3)
1	12/7/20	50/48	44	33.6	17.0
2	12/10/20	50/48	44	33.8	19.0
3	12/4/20	50/48	44	33.6	17.0
4	12/9/20	50/48	44	33.6	18.0
5	12/4/20	50/48	44	34.3	19.0
17	12/16/20	48/48	44	40.1	20.0
18	12/15/20	48/48	44	40.0	20.5
23	12/9/20	50/48	44	26.4	14.0
24	12/14/20	50/48	44	26.2	14.0
25	12/8/20	50/48	44	26.1	14.0
26	12/11/20	50/48	44	26.3	14.0
27	12/7/20	50/48	44	26.3	14.0
28	12/10/20	50/48	44	26.4	15.0

RESULTS

TIP results for the tested shaft include the measured temperature and calculated effective radius versus depth. The effective radius calculations were based on the measured Thermal Profile and the input concrete volume. The measured Thermal Profiles present the measured temperature versus depth for each active sensor at the selected time interval.

The optimal time selected for the pile profile corresponds approximately to near the time when the maximum temperature occurs. The time to near peak temperature and also the time selected for analysis for these shafts was approximately 14 to 22 hours after placement.

In general, temperature variations of +/- .9 degrees Fahrenheit are within normal range for TIP results due to the accuracy of the sensors. Anomalies would be indicated by abrupt reductions in temperature at a particular depth.

The TIP results are presented in Appendix B. The top left plot present the Measured Temperature (degrees Fahrenheit) vs. Depth (feet). Temperature roll-off at the bottom of a shaft is caused by heat loss due to the concrete/soil interface. Temperature roll-off at the top of pile is caused by heat loss due to the concrete/air interface. The top right plot displays the Estimated Effective Radius (inches) vs. Depth (feet). The bottom right plot displays a 2-D interpretation of the shaft. The rebar cage is displayed as a 2-D color spectrum with an overlay of projected pile exterior surface. The bottom left figure is a general soil profile with a 2-D shaft exterior overlay.

GRL has interpreted and categorized the results employing the following criteria:

- **Satisfactory** **(S)** 0 to 6% Effective Average Radius Reduction and Cover Criteria Met
- **Anomaly** **(A)** Effective Average Radius Reduction > 6% (Max Red %) **or** Cover Criteria Not Met (Further Evaluation Required)

When a tested shaft is deemed Anomaly (A), slices modeled at the area of question may be provided so that a structural evaluation of the shaft can be performed prior to implement any corrective measurements.

11 of the 13 shafts in phase 2 construction are categorized as Satisfactory (S). Shafts 4 and 17 are categorized as Anomaly (A).

Descriptions of the Thermal Integrity Profiling results are presented below.

Shaft 1

The temperature profile for this shaft indicates a fairly constant temperature throughout the shaft with the measured temperature slightly cooling within the rock socket. The temperature roll offs at the top and bottom appear consistent with the shaft radius.

Based on the thermal integrity profiling results the effective radius is generally slightly oversized throughout the uncased portion above the rock socket. The effective radius in the rock socket is generally consistent with the design radius of 24 inches. The effective radius in the bottom 3 feet is smaller than 24 inches, but does not reach the 6% effective radius reduction threshold.

The rebar cage appears to be fairly well centered and the concrete cover generally exceeds 3 inches along the length of the shaft, with the exception of the rock socket, which generally has less cover.

No data was received for wire number 1 in this shaft. Each wire is checked prior to shaft installation, however, data was not transmitted after concrete placement. The remaining 3 wires provided reliable data and we feel the integrity of this shaft can be evaluated from this data.

The overall thermal signature, based on the Temperature (degrees Fahrenheit) vs. Depth (feet) graph indicates the shaft is continuous with no reductions in the temperature indicative of major anomalies observed over the tested length. Based on the rating criteria noted above, this shaft was categorized as **Satisfactory (S).**

Shaft 2

The temperature profile for this shaft indicates a fairly constant temperature throughout the shaft with the measured temperature slightly cooling within the rock socket. The temperature roll offs at the top and bottom appear consistent with the shaft radius.

Based on the thermal integrity profiling results the effective radius is generally slightly oversized throughout the uncased portion above the rock socket. The effective radius in the rock socket is generally consistent with the design radius of 24 inches.

The rebar cage appears to be generally shifted in the western direction with wire 4 indicating relatively cool temperatures (nearer to the soil) and wire 2 indicating relatively warm temperatures (nearer the center of the shaft) and the concrete cover generally exceeds 3 inches along the length of the shaft.

The overall thermal signature, based on the Temperature (degrees Fahrenheit) vs. Depth (feet) graph indicates the shaft is continuous with no reductions in the temperature indicative of major anomalies observed over the tested length. Based on the rating criteria noted above, this shaft was categorized as **Satisfactory (S).**

Shaft 3

The temperature profile for this shaft indicates a fairly constant temperature throughout the shaft with the measured temperature slightly cooling within the rock socket. The temperature roll offs at the top and bottom appear consistent with the shaft radius.

Based on the thermal integrity profiling results the effective radius is generally slightly oversized throughout the uncased portion above the rock socket. The effective radius in the rock socket is generally consistent with the design radius of 24 inches.

The rebar cage appears to be fairly well centered and the concrete cover generally exceeds 3 inches along the length of the shaft, with the exception of the rock socket, which generally has less cover.

The overall thermal signature, based on the Temperature (degrees Fahrenheit) vs. Depth (feet) graph indicates the shaft is continuous with no reductions in the temperature indicative of major anomalies observed over the tested length. Based on the rating criteria noted above, this shaft was categorized as **Satisfactory (S).**

Shaft 4

The temperature profile for this shaft indicates a fairly constant temperature throughout the shaft with the measured temperature slightly cooling within the rock socket. The temperature roll off at the top appears consistent with the shaft radius. The temperature roll off at the bottom is abnormal and more linear than expected.

Based on the thermal integrity profiling results the effective radius is generally slightly oversized throughout the uncased portion above the rock socket. The effective radius in the top 5 feet of the rock socket is generally consistent with the design radius. The effective radius drops in the bottom 4 feet of the shaft and crosses the 6% effective radius reduction over the bottom 2 feet of the shaft. A maximum effective radius reduction of 10.4% is indicated.

The rebar cage appears to be fairly well centered and the concrete cover generally exceeds 3 inches along the length of the shaft, with the exception the bottom 2 feet of the shaft, where the effective radius is smaller than the rebar cage.

The overall thermal signature, based on the Temperature (degrees Fahrenheit) vs. Depth (feet) graph indicates the shaft is continuous with no reductions in the temperature indicative of major

anomalies observed over the tested length, with the exception of the bottom 2 feet of the shaft. Based on the rating criteria noted above, this shaft was categorized as **Anomaly (A)** over the bottom 2 feet and **Satisfactory (S)** throughout the rest of the shaft.

The TIP results should be considered with all other available information to determine if further evaluation is required for this shaft.

Shaft 5

The temperature profile for this shaft indicates a fairly constant temperature throughout the shaft with the measured temperature slightly cooling within the rock socket. The temperature roll offs at the top and bottom appear consistent with the shaft radius, however, the bottom roll-off is more linear than expected.

Based on the thermal integrity profiling results the effective radius is generally slightly oversized throughout the uncased portion above the rock socket. The effective radius in the rock socket is generally consistent with the design radius of 24 inches, however, the effective radius in the bottom 2 feet is smaller than 24 inches, but does not reach the 6% effective radius reduction threshold.

The rebar cage appears to be generally shifted in the southeast direction with wires 2 and 3 indicating relatively cool temperatures (nearer to the soil) and wires 1 and 4 indicating relatively warm temperatures (nearer the center of the shaft) and the concrete cover generally exceeds 3 inches along the length of the shaft with the exception of the bottom few feet of the shaft.

The overall thermal signature, based on the Temperature (degrees Fahrenheit) vs. Depth (feet) graph indicates the shaft is continuous with no reductions in the temperature indicative of major anomalies observed over the tested length. Based on the rating criteria noted above, this shaft was categorized as **Satisfactory (S).**

Shaft 17

The temperature profile for this shaft indicates a fairly constant temperature throughout the shaft with the measured temperature slightly cooling within the rock socket. The temperature roll offs at the top and bottom appear consistent with the shaft radius.

Based on the thermal integrity profiling results the effective radius is generally slightly oversized throughout the uncased portion above the rock socket. The effective radius in the rock socket is generally consistent with the design radius of 24 inches.

The rebar cage appears to be fairly well centered and the concrete cover generally exceeds 3 inches along the length of the shaft, with the exception of the rock socket, which generally has less cover.

The overall thermal signature, based on the Temperature (degrees Fahrenheit) vs. Depth (feet) graph indicates the shaft is continuous with no reductions in the temperature indicative of major anomalies observed over the tested length. Based on the rating criteria noted above, this shaft was categorized as **Satisfactory (S).**

Shaft 18

The temperature profile for this shaft indicates a fairly constant temperature throughout the shaft with the measured temperature slightly cooling within the rock socket. The temperature roll off at the top appears consistent with the shaft radius. The temperature roll off at the bottom is abnormal and more linear than expected.

Based on the thermal integrity profiling results the effective radius is generally slightly oversized throughout the uncased portion above the rock socket. The effective radius in the top 15 feet of the rock socket is generally consistent with the design radius. The effective radius drops in the bottom 3 feet of the shaft and crosses the 6% effective radius reduction over the bottom 1 foot of the shaft. A maximum effective radius reduction of 9.7% is indicated.

The rebar cage appears to be fairly well centered and the concrete cover generally exceeds 3 inches along the length of the shaft, with the exception the bottom foot of the shaft, where the effective radius is smaller than the rebar cage.

The overall thermal signature, based on the Temperature (degrees Fahrenheit) vs. Depth (feet) graph indicates the shaft is continuous with no reductions in the temperature indicative of major anomalies observed over the tested length, with the exception of the bottom 1 foot of the shaft. Based on the rating criteria noted above, this shaft was categorized as **Anomaly (A)** over the bottom 1 foot and **Satisfactory (S)** throughout the rest of the shaft.

The TIP results should be considered with all other available information to determine if further evaluation is required for this shaft.

Shaft 23

The temperature profile for this shaft indicates a fairly constant temperature throughout the shaft with the measured temperature slightly cooling within the rock socket. The temperature roll offs at the top and bottom appear consistent with the shaft radius, however the bottom temperature roll-off is atypical as it does not follow the theoretical hyperbolic temperature drop.

Based on the thermal integrity profiling results the effective radius is generally slightly oversized throughout the uncased portion above the rock socket. The effective radius in the rock socket is generally consistent with the design radius of 24 inches. The effective radius drops slightly below

the design radius approximately 1 foot from the bottom of the shaft, but does not reach the 6% reduction threshold.

The rebar cage appears to be fairly well centered and the concrete cover generally exceeds 3 inches along the length of the shaft, with the exception of the rock socket, which generally has less cover.

The bottom foot of temperature data from wire 2 was not used as it indicated a significant increase in temperature at the bottom of the shaft. This is unexpected and likely the bottom temperature node broke loose and moved toward the center of the shaft or upward, increasing the temperature reading. The remaining 3 wires provided reliable data and we feel the integrity of this shaft can be evaluated from this data.

The overall thermal signature, based on the Temperature (degrees Fahrenheit) vs. Depth (feet) graph indicates the shaft is continuous with no reductions in the temperature indicative of major anomalies observed over the tested length. Based on the rating criteria noted above, this shaft was categorized as **Satisfactory (S).**

Shaft 24

The temperature profile for this shaft indicates a fairly constant temperature throughout the shaft with the measured temperature slightly cooling within the rock socket. The temperature roll offs at the top and bottom appear consistent with the shaft radius, however the bottom temperature roll-off is more linear than expected.

Based on the thermal integrity profiling results the effective radius is generally slightly oversized throughout the uncased portion above the rock socket. The effective radius in the rock socket is generally slightly larger than the design radius of 24 inches. The effective radius drops slightly below the design radius approximately 1 foot from the bottom of the shaft, but does not reach the 6% reduction threshold.

The rebar cage appears to be fairly well centered and the concrete cover generally exceeds 3 inches along the length of the shaft, with the exception of the rock socket, which generally has less cover.

The overall thermal signature, based on the Temperature (degrees Fahrenheit) vs. Depth (feet) graph indicates the shaft is continuous with no reductions in the temperature indicative of major anomalies observed over the tested length. Based on the rating criteria noted above, this shaft was categorized as **Satisfactory (S).**

Shaft 25

The temperature profile for this shaft indicates a fairly constant temperature throughout the shaft with the measured temperature slightly cooling within the rock socket. The temperature roll offs at the top and bottom appear consistent with the shaft radius, however, the bottom roll-off is more linear than expected.

Based on the thermal integrity profiling results the effective radius is generally slightly oversized throughout the uncased portion above the rock socket. The effective radius in the rock socket is generally larger than the design radius of 24 inches, however, the effective radius in the bottom 2 feet is smaller than 24 inches, but does not reach the 6% effective radius reduction threshold.

The rebar cage appears to be generally shifted in the North direction with wire 1 indicating relatively cool temperatures (nearer to the soil) and wire 3 indicating relatively warm temperatures (nearer the center of the shaft) and the concrete cover generally exceeds 3 inches along the length of the shaft with the exception of the bottom few feet of the shaft.

The overall thermal signature, based on the Temperature (degrees Fahrenheit) vs. Depth (feet) graph indicates the shaft is continuous with no reductions in the temperature indicative of major anomalies observed over the tested length. Based on the rating criteria noted above, this shaft was categorized as **Satisfactory (S).**

Shaft 26

The temperature profile for this shaft indicates a fairly constant temperature throughout the shaft with the measured temperature slightly cooling within the rock socket. The temperature roll offs at the top and bottom appear consistent with the shaft radius.

Based on the thermal integrity profiling results the effective radius is generally slightly oversized throughout the uncased portion above the rock socket. The effective radius in the rock socket is generally consistent with the design radius of 24 inches.

The rebar cage appears to be fairly well centered and the concrete cover generally exceeds 3 inches along the length of the shaft, with the exception of the rock socket, which generally has less cover.

The overall thermal signature, based on the Temperature (degrees Fahrenheit) vs. Depth (feet) graph indicates the shaft is continuous with no reductions in the temperature indicative of major anomalies observed over the tested length. Based on the rating criteria noted above, this shaft was categorized as **Satisfactory (S).**

Shaft 27

The temperature profile for this shaft indicates a fairly constant temperature throughout the shaft with the measured temperature slightly cooling within the rock socket. The temperature roll offs at the top and bottom appear consistent with the shaft radius.

Based on the thermal integrity profiling results the effective radius is generally slightly oversized throughout the uncased portion above the rock socket. The effective radius in the rock socket is generally consistent with the design radius of 24 inches.

The rebar cage appears to be fairly well centered and the concrete cover generally exceeds 3 inches along the length of the shaft, with the exception of the rock socket, which generally has less cover.

The overall thermal signature, based on the Temperature (degrees Fahrenheit) vs. Depth (feet) graph indicates the shaft is continuous with no reductions in the temperature indicative of major anomalies observed over the tested length. Based on the rating criteria noted above, this shaft was categorized as **Satisfactory (S).**

Shaft 28

The temperature profile for this shaft indicates a fairly constant temperature throughout the shaft with the measured temperature slightly cooling within the rock socket. The temperature roll offs at the top and bottom appear consistent with the shaft radius.

Based on the thermal integrity profiling results the effective radius is generally slightly oversized throughout the uncased portion above the rock socket. The effective radius in the rock socket is generally larger than the design radius of 24 inches. The effective radius in the bottom 1 foot is smaller than 24 inches, but does not reach the 6% effective radius reduction threshold.

The rebar cage appears to be fairly well centered and the concrete cover generally exceeds 3 inches along the length of the shaft, with the exception of the rock socket, which generally has less cover.

No data was received for wire number 2 in this shaft. Each wire is checked prior to shaft installation, however, data was not transmitted after concrete placement. The remaining 3 wires provided reliable data and we feel the integrity of this shaft can be evaluated from this data.

The overall thermal signature, based on the Temperature (degrees Fahrenheit) vs. Depth (feet) graph indicates the shaft is continuous with no reductions in the temperature indicative of major anomalies observed over the tested length. Based on the rating criteria noted above, this shaft was categorized as **Satisfactory (S).**

ADDITIONAL CONSIDERATIONS

Uncertainties in the interpreted TIP results include calculated corrections for pile top and bottom shape which depend on the air and the annual average soil temperature, respectively. Other factors include variations in the thermal diffusivity of the soil around the pile and the reinforcing cage which may have undergone movement during concrete placement. Furthermore, inaccuracies in the observed, installed concrete volumes may cause errors in calculated radii and 3-D pile shape interpretations. These factors limit the direct, unquestioned use of the results presented in this report for pile suitability. We recommend that the responsible engineer(s) use the TIP results in conjunction with the soil borings, pile construction/inspection records, results from other test methods, and foundation loading information to determine foundation acceptability with respect to design requirements.

We appreciate the opportunity to be of assistance to you on this project. Please contact us if you have any questions regarding this report, or if we may be of further service.

Sincerely,
GRL Engineers, Inc.

Benjamin White, P.E.

Matthew Perrella

Matthew Perrella

Appendix A: Thermal Integrity Profiling

1.1 Test Method Overview

The Thermal Integrity Profiler (TIP) uses the temperature generated by curing cement (hydration energy) to assess the quality of cast in place concrete foundations (i.e. drilled shafts, Auger-cast-in-place (ACIP) or Continuous flight auger (CFA) piles). Whereas other methods of integrity testing have limits in assessing the full cross-section or length (Cross-Hole Sonic Logging (CSL): inside the reinforcing cage, or Gamma-gamma Logging (GGL): within 3 inches (75mm) of access tube: Pile Integrity Testing (PIT): length limits or after major section changes), TIP measurements evaluate the concrete quality from all portions of the cross-section along the entire length.

In general, a shortage of competent concrete is registered by relative cool regions (e.g. necks or inclusions); the presence of extra concrete is registered by relative warm regions (e.g. over-pour bulging into soft soil strata).

Anomalies both inside and outside the reinforcing cage not only disrupt the temperature signature near the anomaly, but also at more distant locations at progressively less effect.

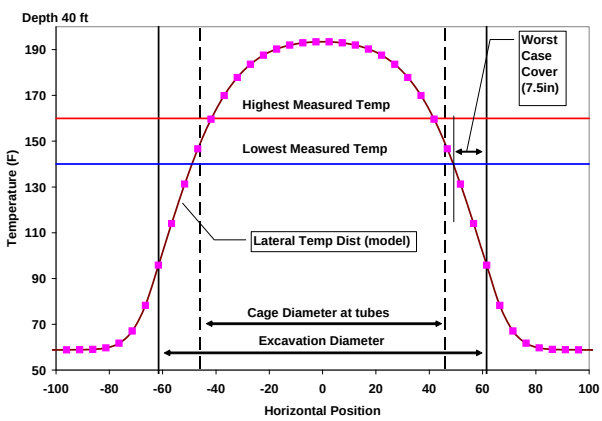

Figure A: Temperature distribution for 10 ft (3.03 m) diameter shaft. Lowest temperature measured corresponded to a 7.5 in (19 cm) cover

The shaft temperature is dependent on the shaft diameter, mix design, and the time of measurement.

Because the temperature distribution within a shaft is bell-shaped with respect to radial position (Figure A), the measurements are sensitive to cage eccentricity as well as the surrounding cover. A cage closer to one side of the excavation exhibits cooler temperatures than average when the cage is closer to the soil. When the cage is closer to the shaft center, temperatures are then warmer.

Since the diameter and temperature relationship is strongly linear in the region of the cage, a plot of the average temperature of the entire cage versus depth mimics the actual shape of the shaft as determined from field concreting logs. Use of construction and concreting logs can be used in concert with the TIP data to better assess the overall quality of a given shaft (Figure B).

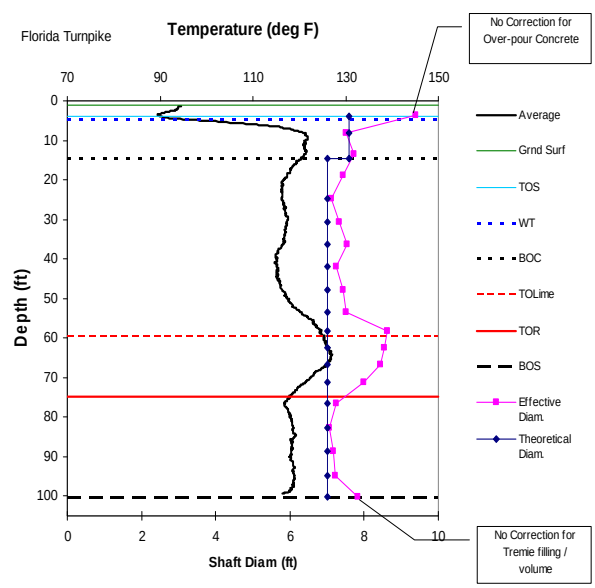

Figure B: Average shaft temperature (black) and effective diameter computed from concreting log (pink with square markers)

1.2 Data Collection

TIP data is obtained either using probes in access tubes or using embedded THERMAL WIRES®.

Figure C: Thermal Integrity Profiling (Probe method).

1.2.1 The TIP system – Probe method

The TIP probe uses four orthogonally oriented infrared sensors within a single thermal probe (Figure D) to measure the inside wall temperature of standard 1.5 or 2.0 inch (38 or 50 mm) access tubes (plastic or steel). Four sensors provide redundancy. The probe diameter is 1.25 inches (32 mm)

Figure D: 5 in. long by 1.25 in. diameter Thermal Probe with four infrared sensors

A depth-encoder attached to the access tube tracks the probe location as it is lowered by the engineer for the entire length of each tube (access tubes must be free of water debris and other liquids during testing). The temperature data are collected typically 12 to 48 hours after concrete casting, depending on shaft diameter and concrete mix. TIP results are insensitive to de-bonding.

1.2.2 The TIP system – Thermal Wire method

The embedded sensor method uses wires with thermal sensors attached to the reinforcing cage (Figure E). No access tubes are required. Data is automatically sampled at specified intervals (generally every 15 minutes) from each embedded THERMAL WIRE cable by a battery powered Thermal Acquisition Port (TAP) allowing the concrete curing process to be monitored. Data can be collected on site at any time after casting for evaluation. A single embedded wire is attached to a center rebar for smaller augercast (CFA) piles, soil nails, micropiles and jet-grouted applications.

Figure E: Embedded THERMAL WIRE cable attached to rebar cage (shown adjacent to CSL access tubes.)

Should an anomaly be detected (local relatively cool spot) by either probes or embedded THERMAL WIRE cables, no additional field data is necessary to perform complete in-depth analyses.

1.3 Data Analysis

Field measurements alone highlight glaring irregularities since the average temperature profile shows the general shaft shape. This level of simple review reveals cage alignment irregularities, casing location, locations of over-pour bulges or necking or deficient concrete, and can easily alert the user or an owner of areas of concern.

Superposition of construction and concreting logs can calibrate the average diameter to the overall average temperature, particularly when multiple concrete trucks per pile are used.

Finally, the measured temperatures when converted to radius can be used to provide a 3-D rendering (Figure F) of the as-built shaft as well as 2-D slices (Figure G) of the shaft cross section at any depths of interest and vertical slices through any radial orientation.

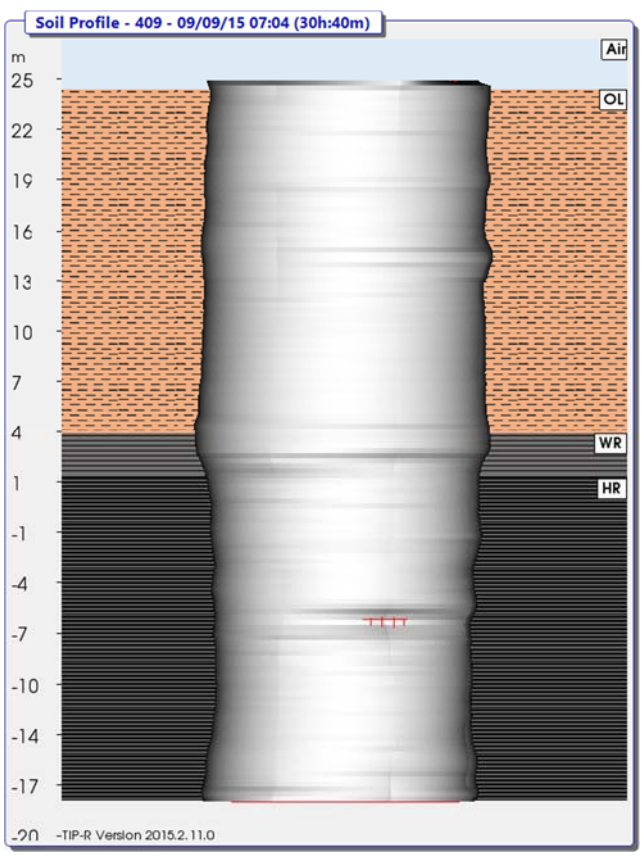

Figure F: 3-D projection of shaft

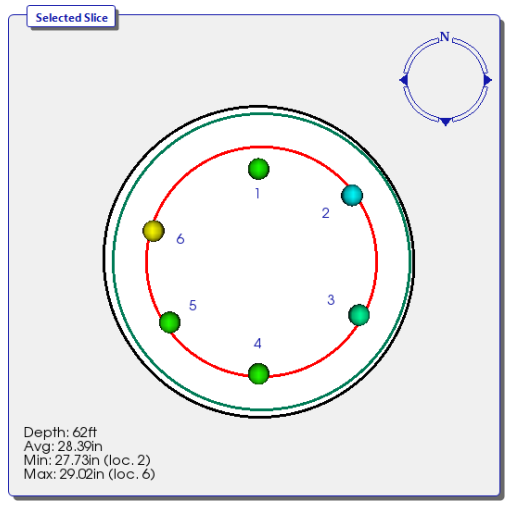

Figure G: horizontal 'slice' of the shaft

1.3.1 Roll-off Modelling

The TOS/BOS Correction window allows the user to model the 'roll-off' observed typically at the top and bottom of the shaft. Note that for a majority of the shaft the heat is dispersed only in the radial direction, however for a length corresponding to one diameter at both the upper and lower portion of the shaft, or any large diameter change, the heat is dispersed not just in a radial pattern, but also in a longitudinal direction. This occurs because the heat is not just conducted into the laterally surrounding soil but also, for the top of shaft, radiates into the ambient air; and for the bottom of shaft, into the soil beneath the shaft. Because of this, proper analysis and interpretation of Thermal Integrity results requires a correction for this region of the shaft where the temperatures are non-linear. It should be noted that the surrounding soil receives the heat that the shaft radiates and thus becomes warm. The soil is warmest at the shaft interface and gradually cools as the radial distance from the shaft center increases.

The roll-off at the shaft ends for a uniform shaft follows a hyperbolic tangent curve. If we superimpose this curve on the measured temperature curve in the roll-off zone, the difference between these curves is then due to differences in the actual shaft shape relative to the uniform cylindrical shape,

allowing us to compute the estimated actual shape.

Corrections made at the top and bottom of the shaft will estimate the region of non-linear temperatures due to the roll-off by applying an estimated curve based of the ambient soil temperature, ambient air temperature, and average concrete temperature. Note that roll-off correction is a 'best-fit' correction.

1.3.2 Effective Radius

In many cases, simple presentation of the temperatures versus depth may be satisfactory. For example, the total installed volume is known to be substantially greater than the theoretical neat volume of the hole (nominal area times nominal length) and the temperature profiles are relatively uniform, with normal top and bottom temperature roll-off observed.

If unusual features are observed in the data (local cool temperatures or significant cage shifts, or if project specifications require, then further analysis is generally performed to obtain an "***effective radius***" versus depth versus quadrant. The "***effective radius***" is "expected" to be the designed shaft radius which may actually be the radius of the tool or the radius of a casing. As the measured temperature is proportional to the local radius and cover, such a correlation is produced to estimate the effective radius from temperature measurements and the total volume of placed concrete. The term "***effective radius***" was coined to address the scenario where concrete quality may be varying instead of shaft shape. To that end, ***effective radius is defined as that radius of intact uncompromised concrete that would produce the measured temperature***.

In order to properly interpret data into an "***effective radius***" presentation, a significant amount of information should be gathered. Thermal data is collected into the TIP main unit and includes the thermal arrays and descriptions of geometries (nominal radius, nominal cage radius, spacing between measurement locations, etc.)

Other pertinent information would include soil borings, Thermal field logs, drilling logs that would include any pertinent diameter changes, casing lengths (permanent or temporary), and any unusual occurrences, and logs of concrete placement (preferably vs depth). If the shaft extends above the ground or is cased through water zone, these affect this cooling of the upper portion of the shaft, and therefore data interpretation. It should be noted that the diffusivity of heat transfer in the soil is relatively unaffected by the soil type or water table as the heat generation is significantly higher and drives the process (at least through the temperature rise portion of the heating and cooling cycle). Obviously the more information available the better qualified the result answer that can be achieved.

1.4 Evaluation of Thermal Results

Shaft acceptance criteria based on Thermal Integrity Profiling extends current practices by now knowing the average shaft radius, local shaft cover, and cage alignment / eccentricity. Therefore acceptance must consider all aspects of load carrying capacity as well as durability afforded by the concrete cover thickness. To this end, a broad specification may cover a majority of probable conditions but more refined considerations may be more appropriate for a given project and must therefore be evaluated by the design team.

The load carrying requirements of drilled shafts can be controlled by geotechnical side shear (most common) or structural bending and/or compression. These are directly related to the circumference surface area of the shaft, the moment of inertia, and the cross sectional area, respectively. Using a percent radius reduction approach means that each will be affected differently; circumference linearly related, moment of inertia effects based on reduction raised to the fourth power, and area effects related to the square of the reduction. Figure H. shows these effects irrespective of shaft diameter but where the loss of section is assumed in the worst case position, outside the cage.

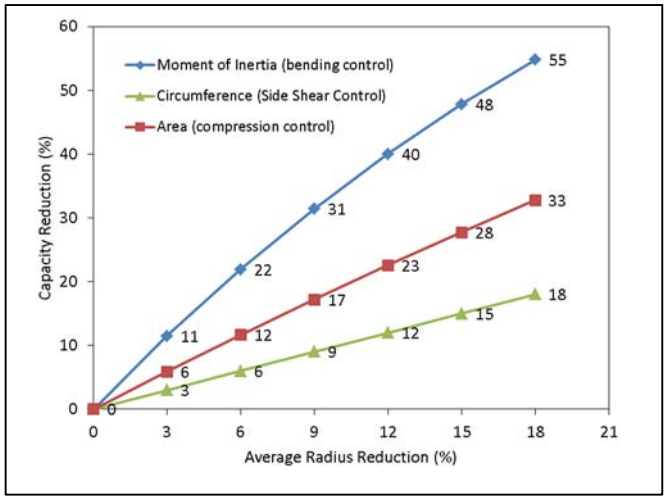

Figure H. Effects of average shaft radius reduction on capacity.

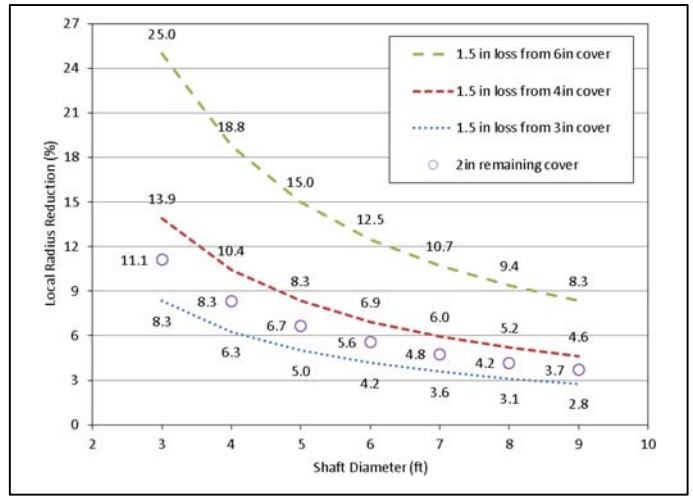

Figure I. Local radius reductions as a function of shaft diameter and permissible cover loss.

While the average radius is an indication of the cross sectional properties, the local radius is a better indication of the concrete cover and cage alignment/eccentricity. AASHTO recommended minimum cover of 4in is often used throughout the U.S., but individual states have adopted different acceptance criteria based on local needs or conditions.

However, private / commercial designers and some state agencies allow a design concrete cover of 3in which is the ACI minimum cover for foundations cast-in-place. While this was intended for spread footings poured on grade, many use this criterion for deep foundations as well. Figure I. shows the effect of two cover loss considerations on the local radius reduction. If 1.5in of cover loss is acceptable, but with a design cover of 3, 4, or 6in, the permissible maximum local radius reduction is given. If 2in of remaining cover is the permissible criterion (ACI exterior concrete minimum for above ground applications), then that effect is also shown.

In reality, a 3in design cover provides no leeway for error as any cage movement in a perfectly-sized shaft impinges on the minimum cover for cast-in-place concrete and the 2in ACI minimum for above ground, exterior conditions is not applicable.

Based on the above considerations acceptance criteria can be implemented as:

Satisfactory (S)

0 to 6% Effective Radius Reduction <u>and</u> Cover Criteria Met

Anomaly (A)

Effective Local Radius Reduction > 6%

<u>or</u> Cover Criteria Not Met

When a tested shaft is deemed Anomaly (A), slices modeled at the area of question should be required so that a structural evaluation of the shaft can be performed prior to implement any corrective measurements.

Questionable areas which are triggered by an Effective Diameter Reduction that have measured temperature reductions at opposite wire instrumentation locations could potentially have an internal reduction and not necessarily be solely a cover reduction. Further evaluation should be performed.

1.5 Corrective Measures

A limited number of corrective measures are available when a defect is indicated by the TIP method. Such measures include:

•Static load testing to prove the shaft integrity to be adequate. This is often the most expensive alternate and not well suited for testing large numbers of shafts.

•Dynamic Load Testing (DLT) with a Pile Driving Analyzer® which would yield evidence of satisfactory shaft performance under the dynamic load, which is typically in the range of the shaft's service loads.

•If access tubes are installed in the shaft. Testing by CSL, if defects are located with the direct path of the access tube combinations, may confirm the presence of defect.

•Sonic Pulse Echo testing with the Pile Integrity Tester™ (PIT) as an additional method of non-destructive testing.

•Coring of the shaft. Besides yielding a concrete core, video cameras can be used in the cored hole for a visual inspection of the shaft concrete.

•Repair by grouting high strength reinforcement bars in the access tubes. This is only possible if the tubes are made of steel.

•Pressure grouting the shaft either by piercing the tubes or by cored access holes.

1.6 . Disclaimer

As Thermal Integrity Profiling is based on the heat generated during the concrete hydration process, the test method is then highly dependent on acquiring data early in the hydration process, generally slightly before or after the point in time the shaft reaches peak heat. The point in time which peak heat occurs is dependent on actual shaft diameter and actual concrete mix design.

As with most Non-Destructive methods of pile material testing, results are not always a clear indication of the strength of a shaft. A variety of error sources or limitations can mask some of the defects while exaggerating others. It is therefore suggested that the TIP results are always used together with other records of shaft installation and that they are not used as the sole basis for shaft rejection or shaft acceptance.

As 'Roll-off' regions in the shaft are subject to ambient atmospheric conditions as well as ambient soil temperatures, the modelling is dependent on the accuracy of such information. Additionally, where the bottom 'roll-off' occurs is dependent on where the lowest thermal measurement has occurred and the actual bottom of the shaft.

As the Effective Radius estimation is highly dependent on concrete volume measurements, the accuracy of the effective radius is thus equally dependent on those volume measurements. Shafts with little volume information, particularly in the case of small and/or short shafts which may require concrete volumes less than one truck load, may have a tendency to over-predict the effective radius.

If Modelling of the concrete mix design is employed the results of such modelling are dependent on the accuracy of the information given and the actual mixture placed

Shafts with multiple or highly variable impedance (cross section) changes produce complex records which are difficult or impossible to analyze after the first major or second smaller reflection.

Lack or discontinuities in reinforcement cannot be detected

It should be noted, as with many other non-destructive test methods, that the method can only assess shaft integrity and makes no qualifications on the suitability of the shafts load carrying capacity.

Appendix B: Thermal Integrity Profiling Results

TIP-R Results - Temperature Analysis Tools

Project: 195067-9 - Kokosing - OC3 Railroad TIP Phase 2
Shaft: DS-01
Timestamp: 12/08/20 09:13 (21h:4m)

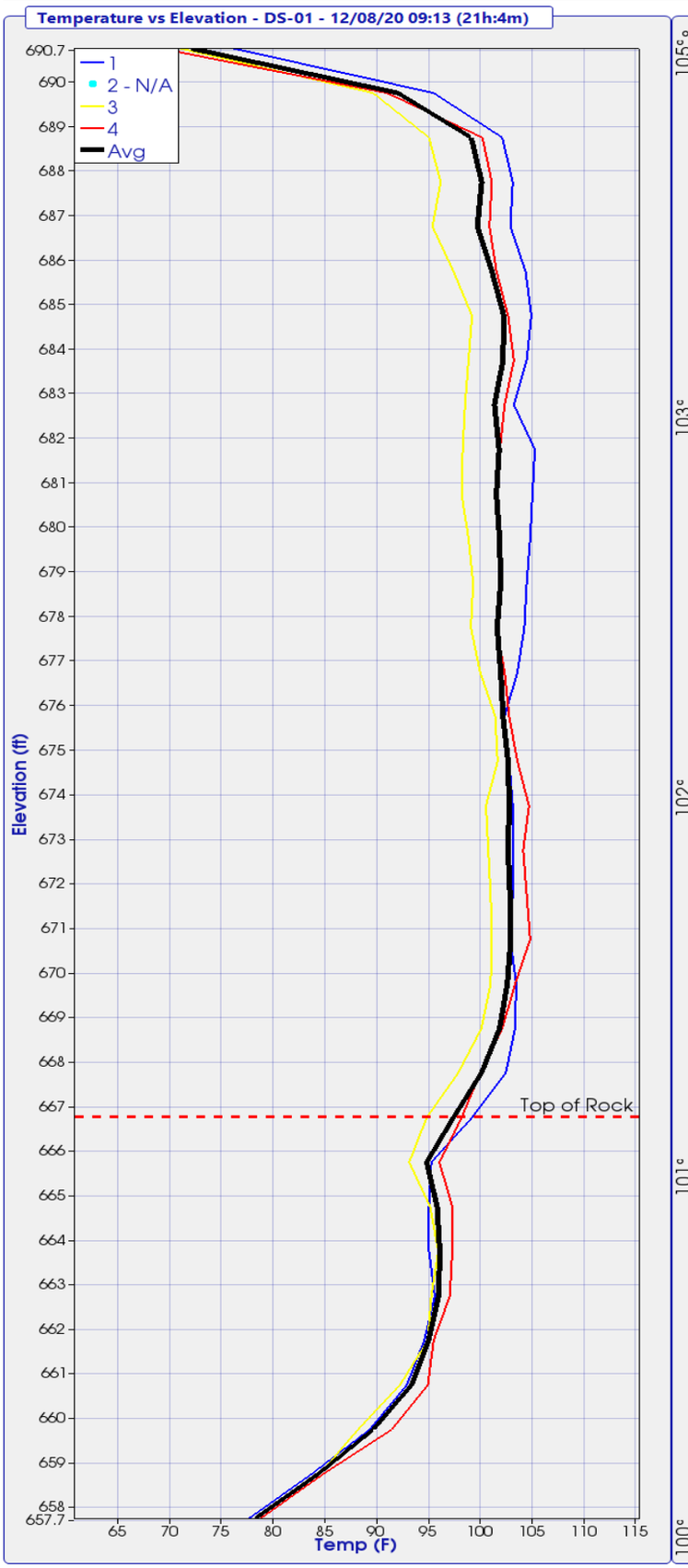

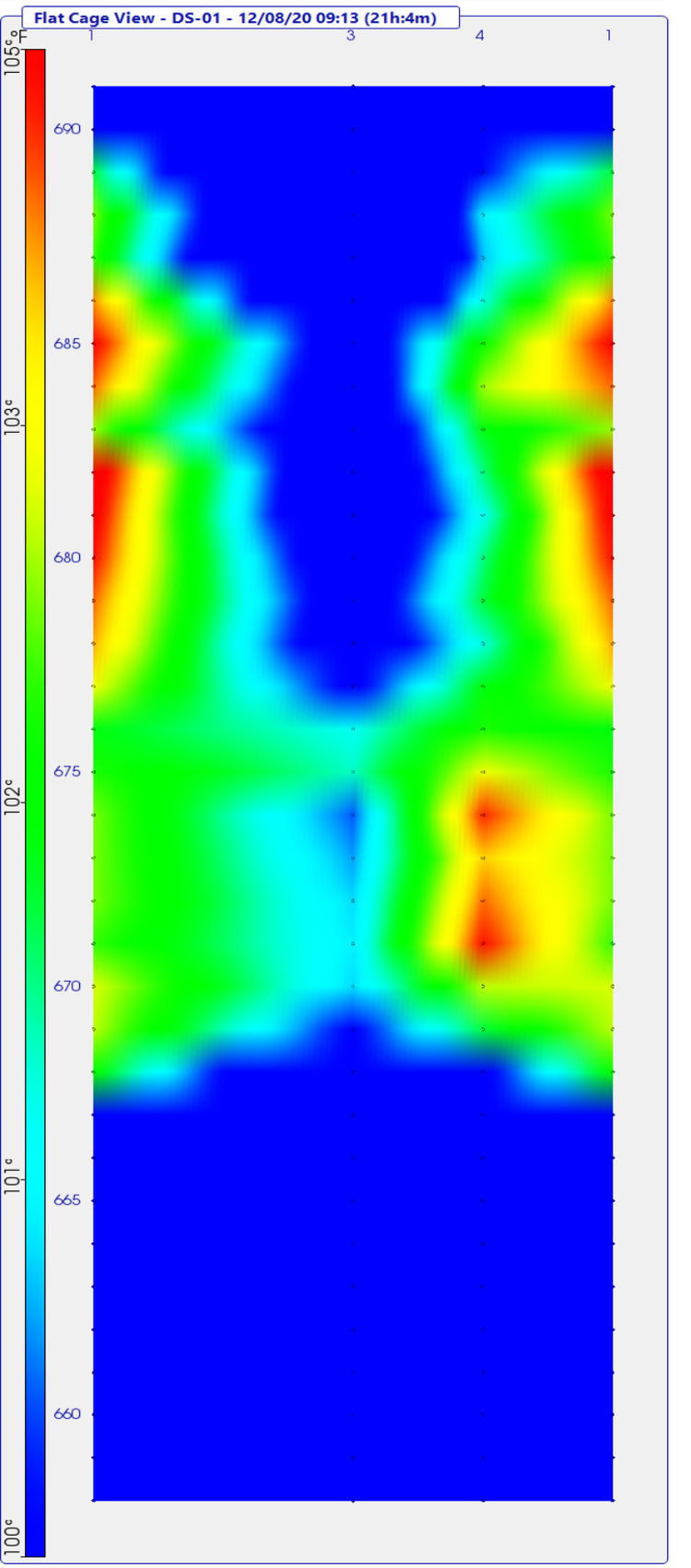

TIP-R Results - Radius Analysis Tools

Project: 195067-9 - Kokosing - OC3 Railroad TIP Phase 2
Shaft: DS-01
Timestamp: 12/08/20 09:13 (21h:4m)

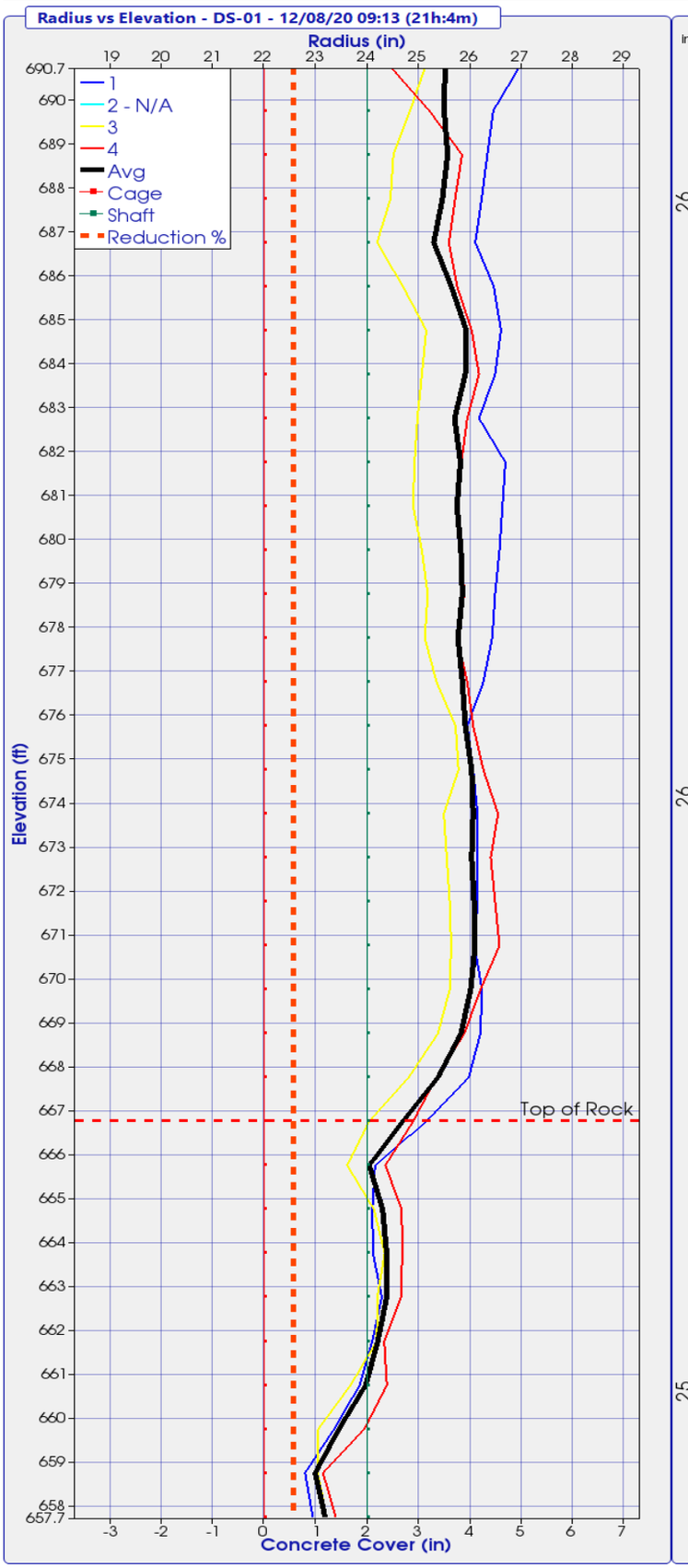

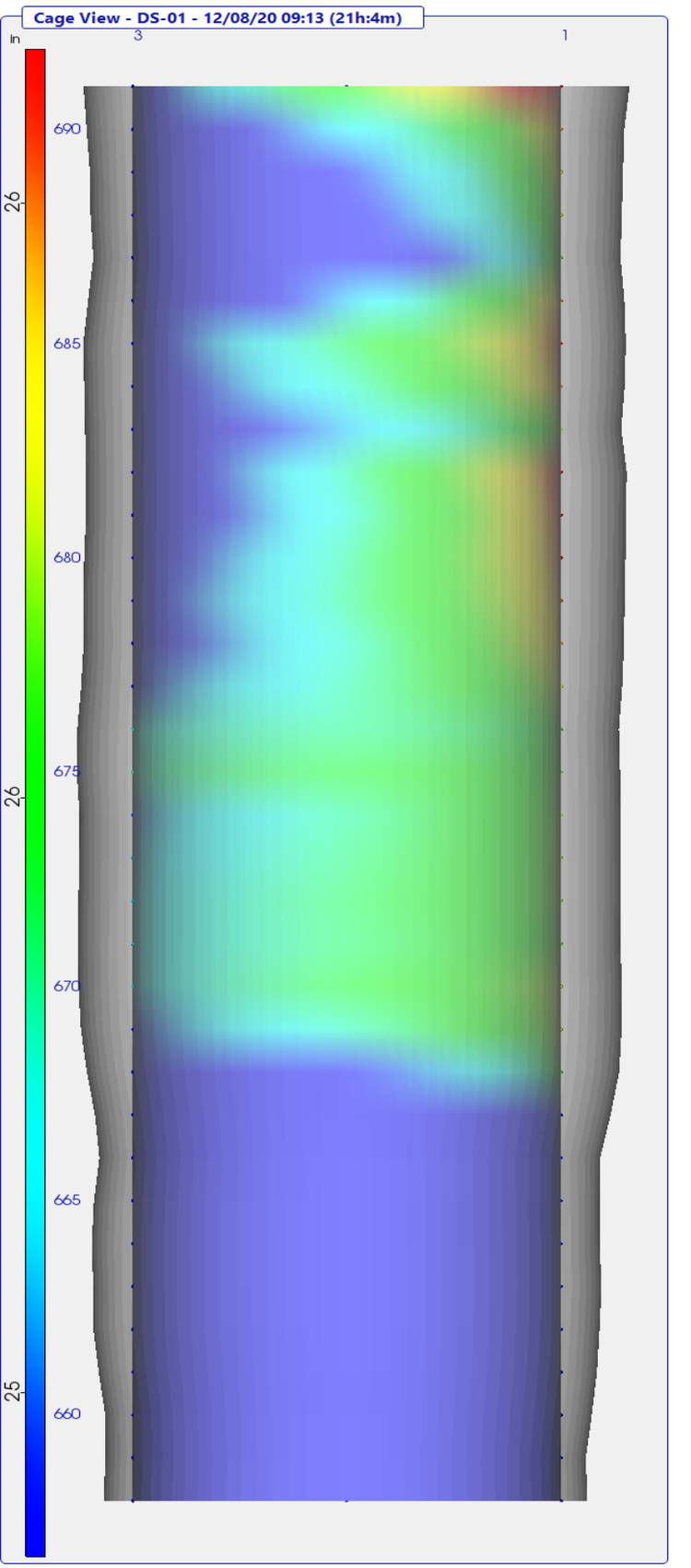

TIP-R Results - Radius Location Analysis

Project: 195067-9 - Kokosing - OC3 Railroad TIP Phase 2
Shaft: DS-01
Timestamp: 12/08/20 09:13 (21h:4m)

Adjustments Applied: Top (yes) Bottom (yes) Mid-Shaft (no)

Elevation (ft)	Wire 1 Radius (in)	Wire 2 Radius (in)	Wire 3 Radius (in)	Wire 4 Radius (in)	Effective Average Radius(in)
690.7	27.0		25.1	24.5	25.5
689.7	26.5		24.8	25.2	25.5
688.7	26.3		24.5	25.8	25.6
687.7	26.2		24.5	25.7	25.5
686.7	26.1		24.2	25.6	25.3
685.7	26.5		24.7	25.8	25.6
684.7	26.6		25.2	26.0	25.9
683.7	26.5		25.1	26.2	25.9
682.7	26.2		25.0	25.9	25.7
681.7	26.7		24.9	25.8	25.8
680.7	26.6		24.9	25.7	25.7
679.7	26.6		25.1	25.8	25.8
678.7	26.5		25.2	25.9	25.9
677.7	26.4		25.1	25.7	25.8
676.7	26.3		25.3	25.9	25.9
675.7	25.9		25.7	26.1	25.9
674.7	26.1		25.8	26.3	26.0
673.7	26.1		25.5	26.5	26.1
672.7	26.1		25.5	26.4	26.0
671.7	26.1		25.6	26.5	26.1
670.7	26.1		25.6	26.6	26.1
669.7	26.2		25.6	26.2	26.0
668.7	26.2		25.4	25.9	25.8
667.7	26.0		24.8	25.3	25.4
666.7	25.2		24.0	24.9	24.7
665.7	24.2		23.6	24.4	24.0
664.7	24.1		24.1	24.7	24.3
663.7	24.1		24.3	24.7	24.4
662.7	24.3		24.2	24.7	24.4
661.7	24.1		24.2	24.3	24.2
660.7	23.9		23.7	24.4	24.0
659.7	23.4		23.0	23.9	23.5
658.7	22.8		23.0	23.1	23.0
657.7	22.9		23.2	23.4	23.2

TIP-R Results - Radius Reduction Analysis

Project: 195067-9 - Kokosing - OC3 Railroad TIP Phase 2
Shaft: DS-01
Timestamp: 12/08/20 09:13 (21h:4m)

Adjustments Applied: Top (yes) Bottom (yes) Mid-Shaft (no)

Elevation (ft)	Design Radius (in)	Effective Radius (in)	Radius Reduction % > 6.00%
690.7	24.0	25.5	
689.7	24.0	25.5	
688.7	24.0	25.6	
687.7	24.0	25.5	
686.7	24.0	25.3	
685.7	24.0	25.6	
684.7	24.0	25.9	
683.7	24.0	25.9	
682.7	24.0	25.7	
681.7	24.0	25.8	
680.7	24.0	25.7	
679.7	24.0	25.8	
678.7	24.0	25.9	
677.7	24.0	25.8	
676.7	24.0	25.9	
675.7	24.0	25.9	
674.7	24.0	26.0	
673.7	24.0	26.1	
672.7	24.0	26.0	
671.7	24.0	26.1	
670.7	24.0	26.1	
669.7	24.0	26.0	
668.7	24.0	25.8	
667.7	24.0	25.4	
666.7	24.0	24.7	
665.7	24.0	24.0	
664.7	24.0	24.3	
663.7	24.0	24.4	
662.7	24.0	24.4	
661.7	24.0	24.2	
660.7	24.0	24.0	
659.7	24.0	23.5	
658.7	24.0	23.0	
657.7	24.0	23.2	

TIP-R Results - TOS/BOS Adjustments

Project: 195067-9 - Kokosing - OC3 Railroad TIP Phase 2
Shaft: DS-01
Timestamp: 12/08/20 09:13 (21h:4m)

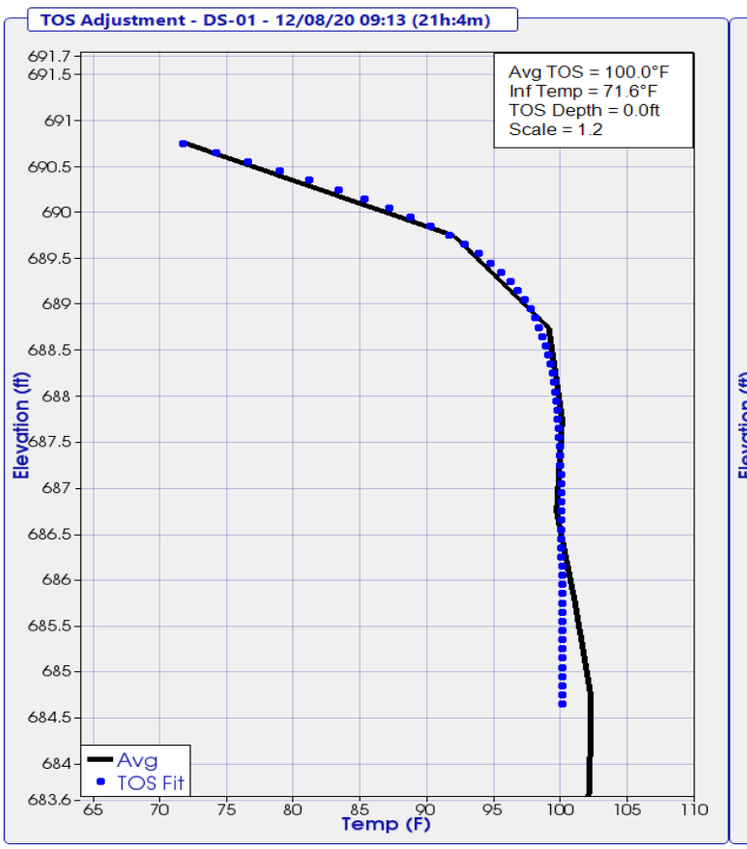

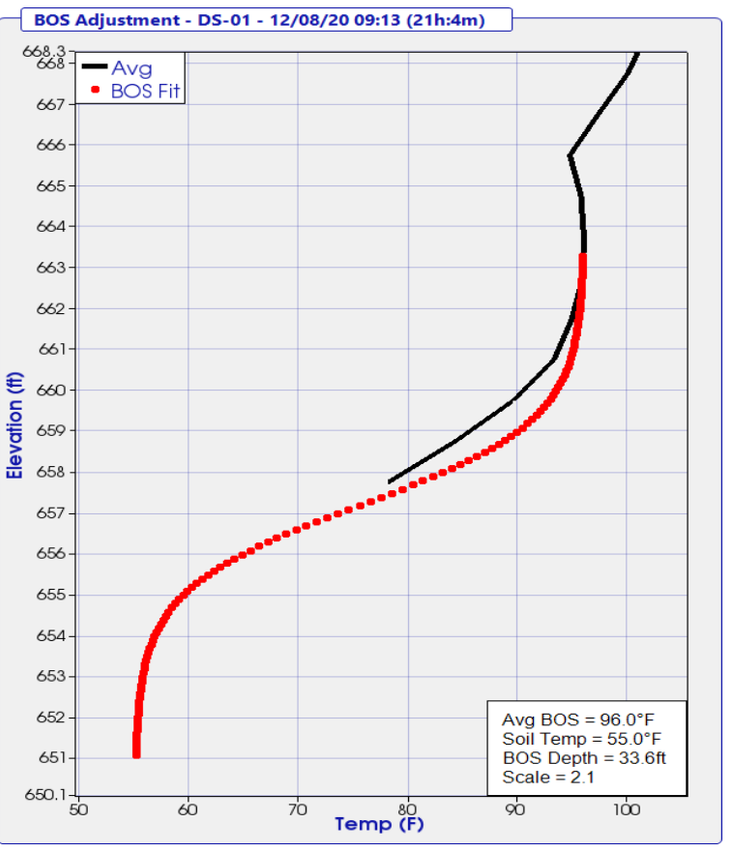

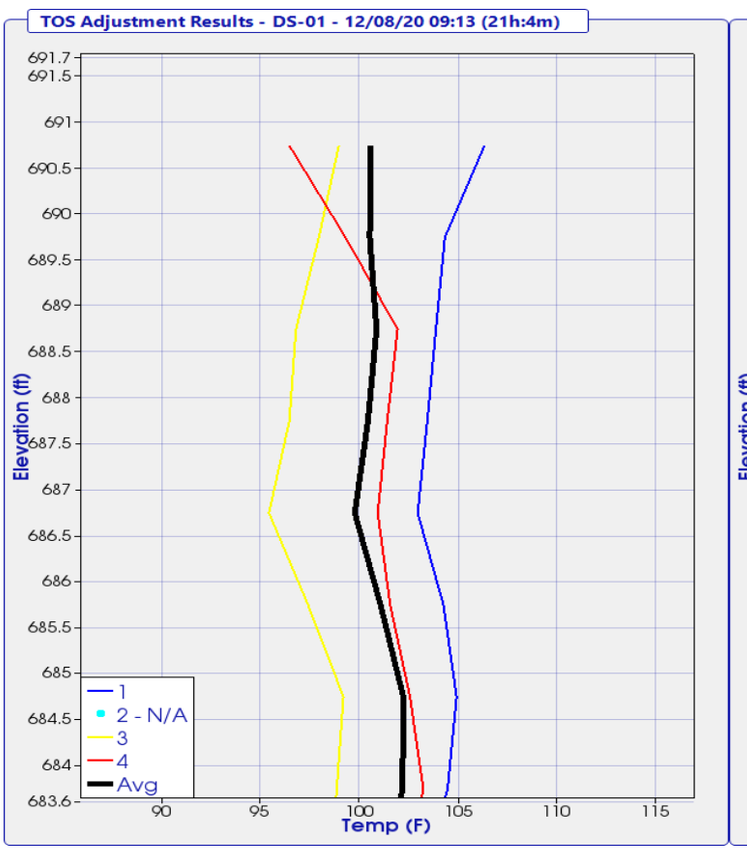

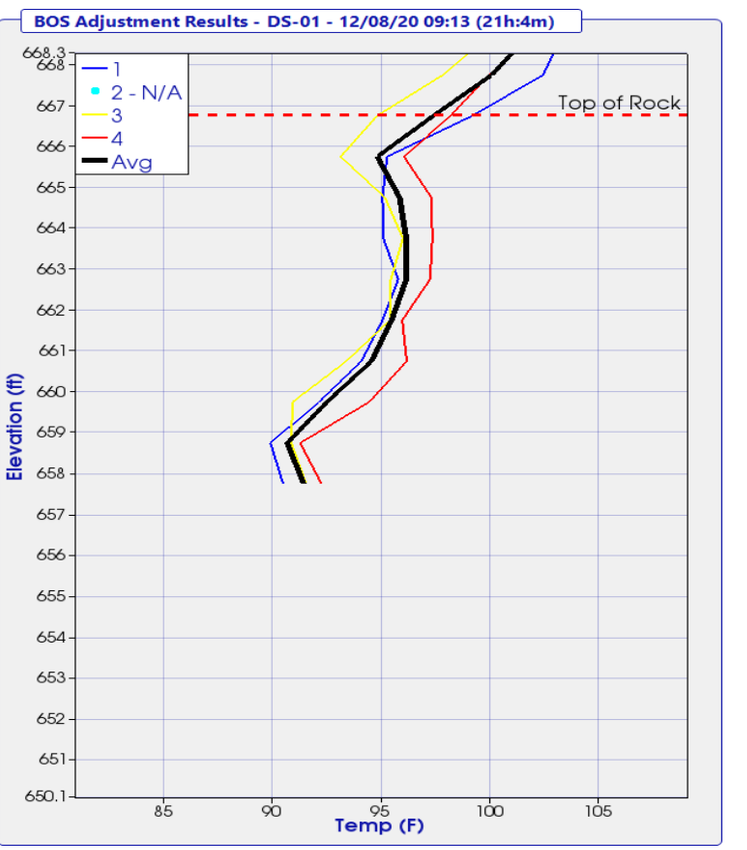

THERMAL FIELD LOG

Project: OC3
Pier No.: Fwd Abut

Date Placed: 12/7/2020
Shaft No.: DS01

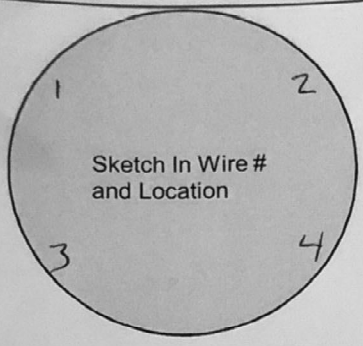

Wire #	Serial #	Wire Length (#nodes)	Nodes Above Concrete	Wire Tested After Install
1	59629	40		Yes
2	59630	↓		↓
3	59628			
4	59627			

Designate Northerly wire as #1

Wire-Wire Distance		
1-3 ____ in.	2-3 ____ in.	4-3 ____ in.
2-1 ____ in.	4-1 ____ in.	

Shaft Information

	Design	As-Built
Shaft Dia.	____ in.	50 in.
Shaft Length	____ ft.	33.58 ft.
Concrete Vol.	____ cy.	17 cy.
Cage Length	____ ft.	33.25 ft.
Cage Dia.	____ in.	____ in.
Casing Dia. (perm./temp.)	____ in.	____ in.
Casing Length	____ ft.	____ ft.
Rock Socket Dia.	____ in.	____ in.
Rock Socket Length	____ ft.	9.6 ft.

Elevation

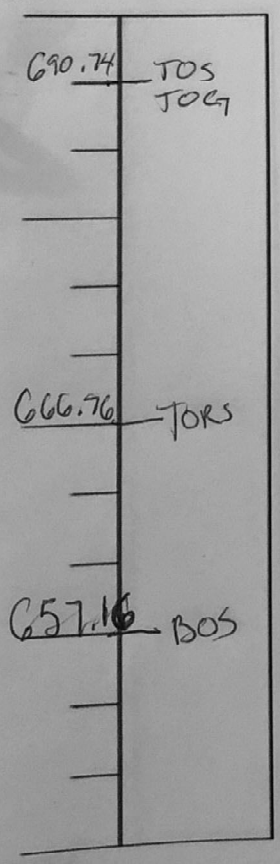

* indicate changes in diameter

Field Notes:

Start of Placement -

End of Placement -

Placement Method -

Legend

TOC	Top of Casing	BOC	Bottom of Casing
TOG	Top of Ground	BORC	Bottom of Reinf. Cage
TOS	Top of Shaft	BOS	Bottom of Shaft
TORS	Top of Rock Socket	▼	Water Level

Completed By: Adam Hu

Please Submit with Concrete Placement Log and Installation Record

4 Wire - Shaft

TIP-R Results - Temperature Analysis Tools

Project: 195067-9 - Kokosing - OC3 Railroad TIP Phase 2
Shaft: DS-02
Timestamp: 12/11/20 08:15 (21h:13m)

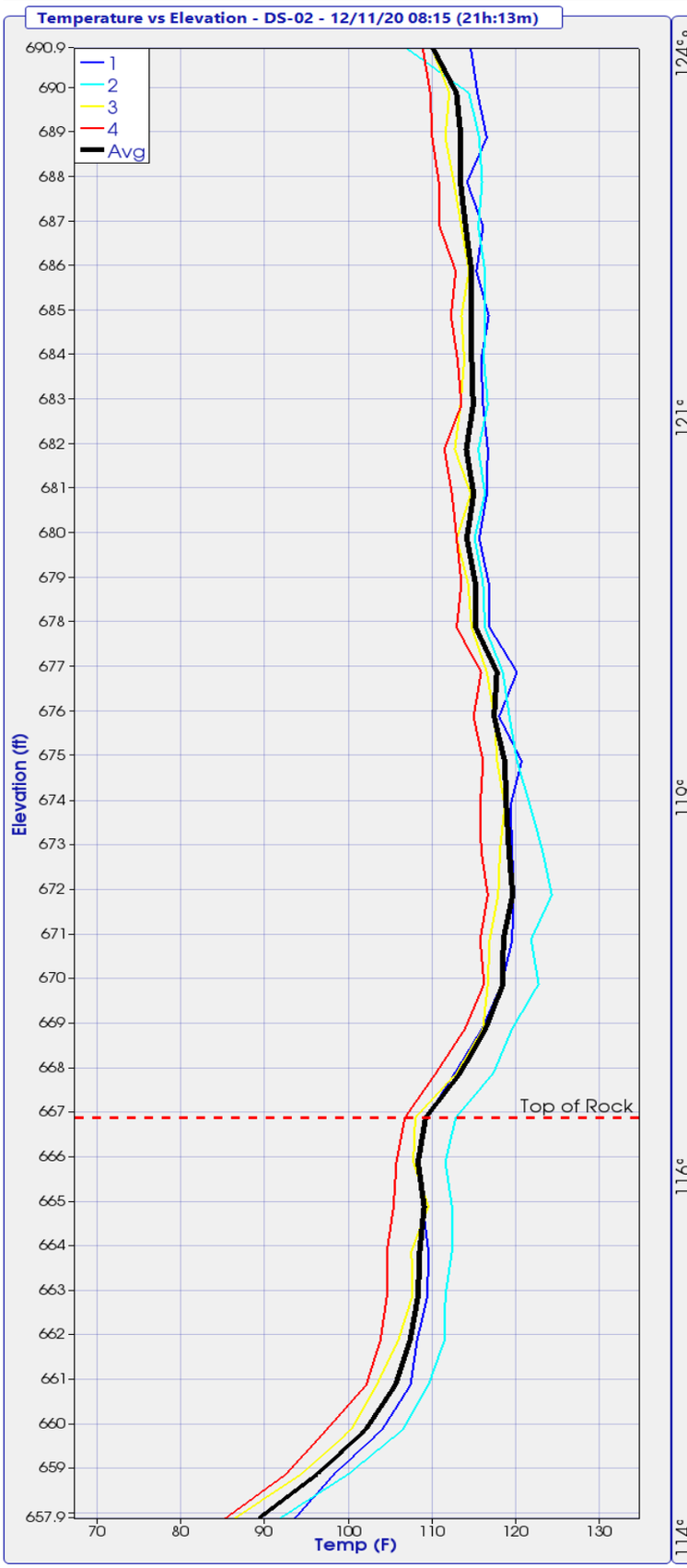

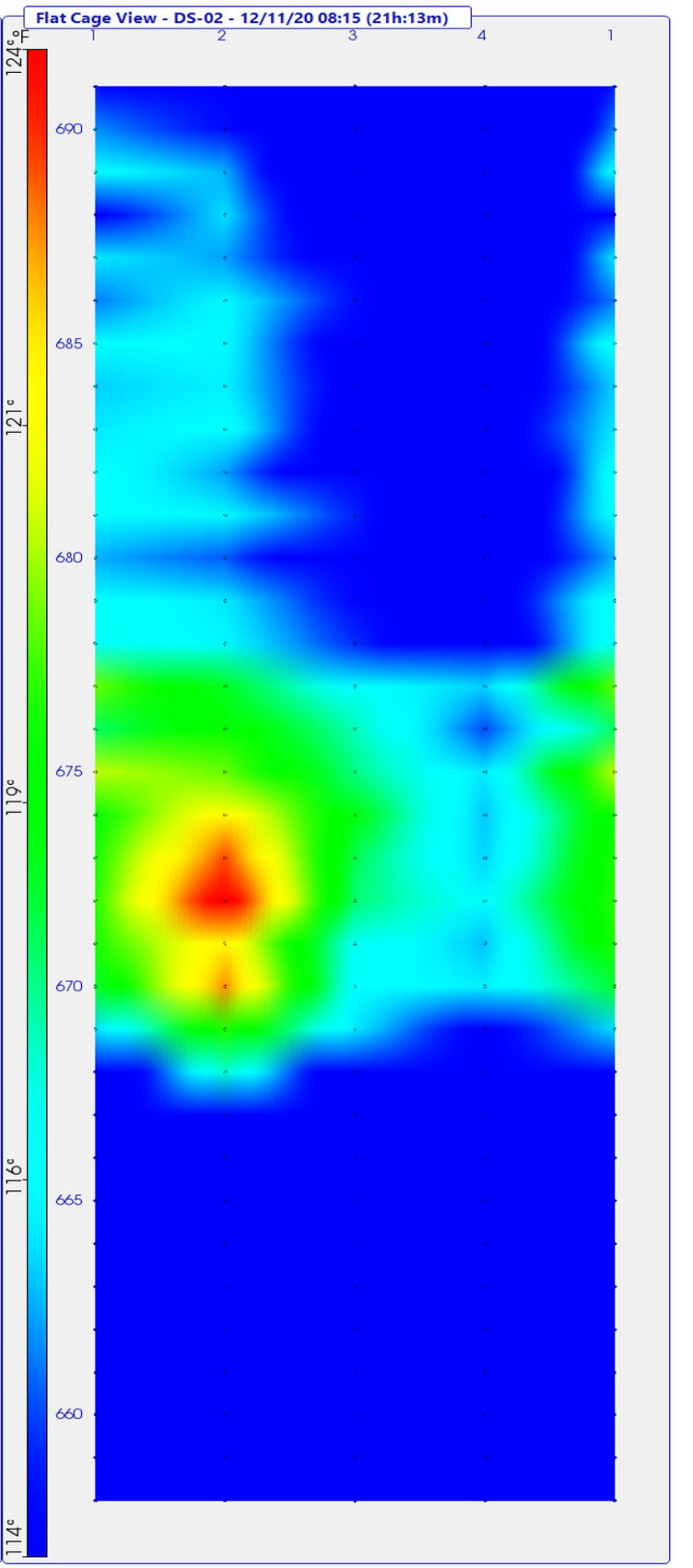

TIP-R Results - Radius Analysis Tools

Project: 195067-9 - Kokosing - OC3 Railroad TIP Phase 2
Shaft: DS-02
Timestamp: 12/11/20 08:15 (21h:13m)

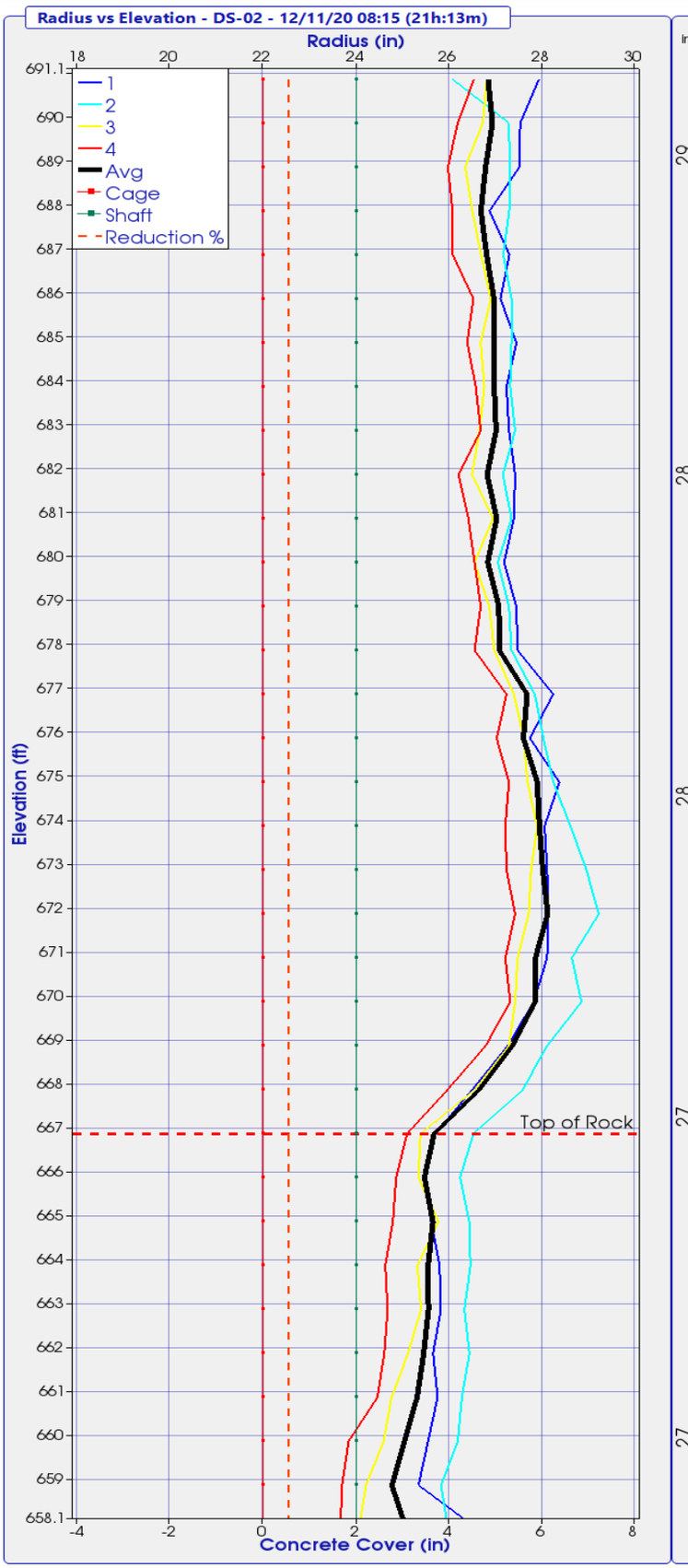

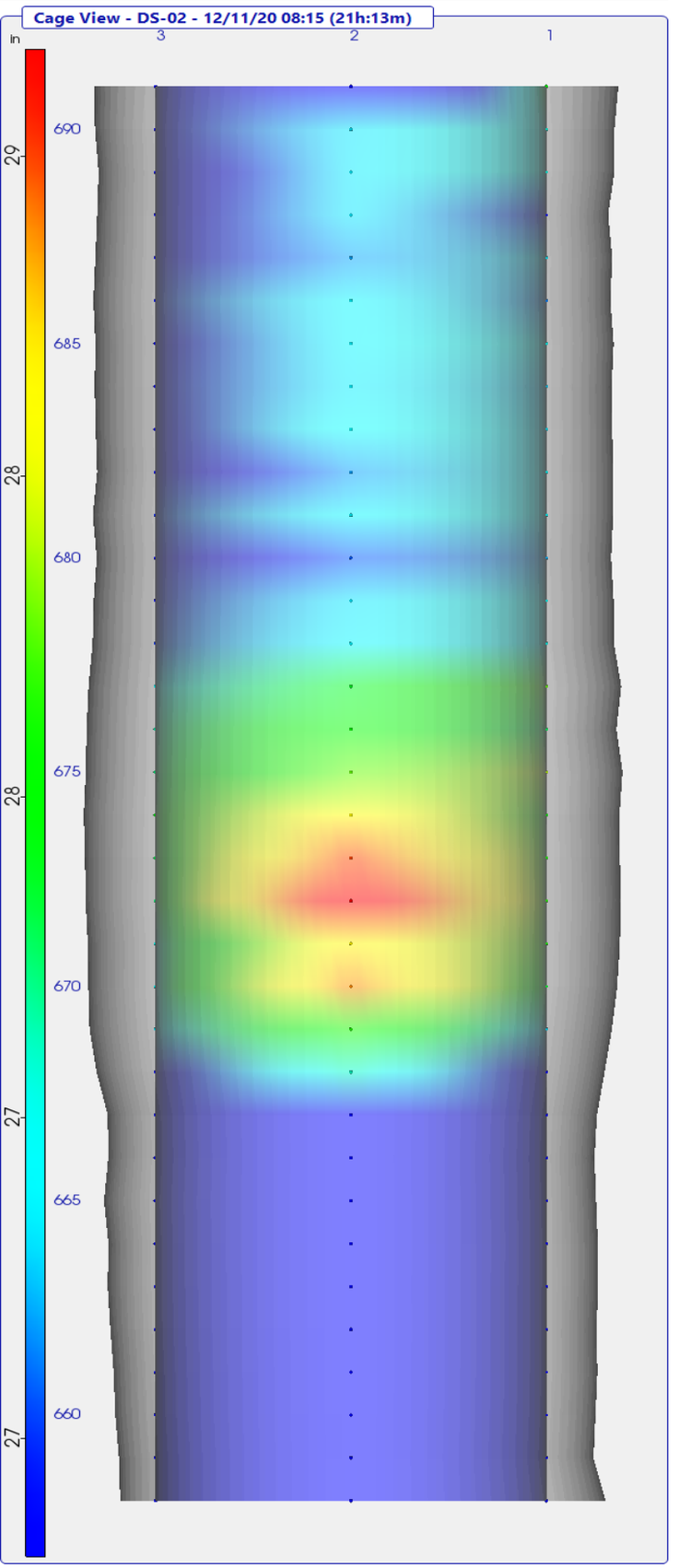

TIP-R Results - Radius Location Analysis

Project: 195067-9 - Kokosing - OC3 Railroad TIP Phase 2
Shaft: DS-02
Timestamp: 12/11/20 08:15 (21h:13m)

Adjustments Applied: Top (yes) Bottom (yes) Mid-Shaft (no)

Elevation (ft)	Wire 1 Radius (in)	Wire 2 Radius (in)	Wire 3 Radius (in)	Wire 4 Radius (in)	Effective Average Radius(in)
690.9	27.9	26.1	26.8	26.5	26.8
689.9	27.5	27.3	26.7	26.2	26.9
688.9	27.5	27.3	26.4	26.0	26.8
687.9	26.9	27.3	26.5	26.1	26.7
686.9	27.3	27.2	26.7	26.1	26.8
685.9	27.1	27.3	26.9	26.5	27.0
684.9	27.5	27.3	26.7	26.4	27.0
683.9	27.2	27.3	26.8	26.6	27.0
682.9	27.3	27.4	26.7	26.7	27.0
681.9	27.4	27.2	26.5	26.2	26.8
680.9	27.4	27.3	27.0	26.4	27.0
679.9	27.2	27.1	26.6	26.6	26.8
678.9	27.5	27.3	26.9	26.7	27.1
677.9	27.5	27.3	27.0	26.6	27.1
676.9	28.2	27.9	27.4	27.2	27.7
675.9	27.7	28.0	27.6	27.0	27.6
674.9	28.4	28.2	27.7	27.3	27.9
673.9	28.1	28.6	27.9	27.2	27.9
672.9	28.1	29.0	27.8	27.2	28.0
671.9	28.1	29.2	27.7	27.4	28.1
670.9	28.1	28.6	27.5	27.2	27.9
669.9	27.8	28.9	27.4	27.3	27.9
668.9	27.3	28.1	27.3	26.8	27.4
667.9	26.5	27.6	26.6	26.0	26.7
666.9	25.7	26.5	25.4	25.1	25.7
665.9	25.4	26.2	25.3	24.9	25.5
664.9	25.6	26.4	25.8	24.8	25.7
663.9	25.8	26.5	25.3	24.6	25.6
662.9	25.8	26.3	25.4	24.7	25.6
661.9	25.7	26.4	25.1	24.6	25.5
660.9	25.8	26.3	24.8	24.5	25.3
659.9	25.6	26.2	24.6	23.8	25.0
658.9	25.3	25.8	24.2	23.7	24.8
657.9	26.6	26.0	24.1	23.7	25.1

TIP-R Results - Radius Reduction Analysis

Project: 195067-9 - Kokosing - OC3 Railroad TIP Phase 2
Shaft: DS-02
Timestamp: 12/11/20 08:15 (21h:13m)

Adjustments Applied: Top (yes) Bottom (yes) Mid-Shaft (no)

Elevation (ft)	Design Radius (in)	Effective Radius (in)	Radius Reduction % > 6.00%
690.9	24.0	26.8	
689.9	24.0	26.9	
688.9	24.0	26.8	
687.9	24.0	26.7	
686.9	24.0	26.8	
685.9	24.0	27.0	
684.9	24.0	27.0	
683.9	24.0	27.0	
682.9	24.0	27.0	
681.9	24.0	26.8	
680.9	24.0	27.0	
679.9	24.0	26.8	
678.9	24.0	27.1	
677.9	24.0	27.1	
676.9	24.0	27.7	
675.9	24.0	27.6	
674.9	24.0	27.9	
673.9	24.0	27.9	
672.9	24.0	28.0	
671.9	24.0	28.1	
670.9	24.0	27.9	
669.9	24.0	27.9	
668.9	24.0	27.4	
667.9	24.0	26.7	
666.9	24.0	25.7	
665.9	24.0	25.5	
664.9	24.0	25.7	
663.9	24.0	25.6	
662.9	24.0	25.6	
661.9	24.0	25.5	
660.9	24.0	25.3	
659.9	24.0	25.0	
658.9	24.0	24.8	
657.9	24.0	25.1	

TIP-R Results - TOS/BOS Adjustments

Project: 195067-9 - Kokosing - OC3 Railroad TIP Phase 2
Shaft: DS-02
Timestamp: 12/11/20 08:15 (21h:13m)

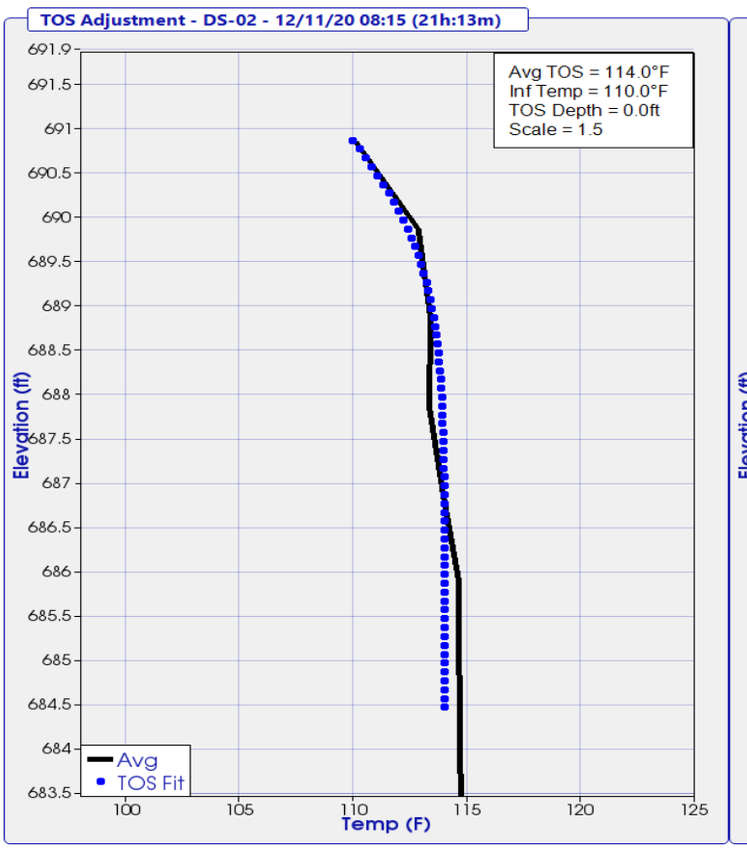

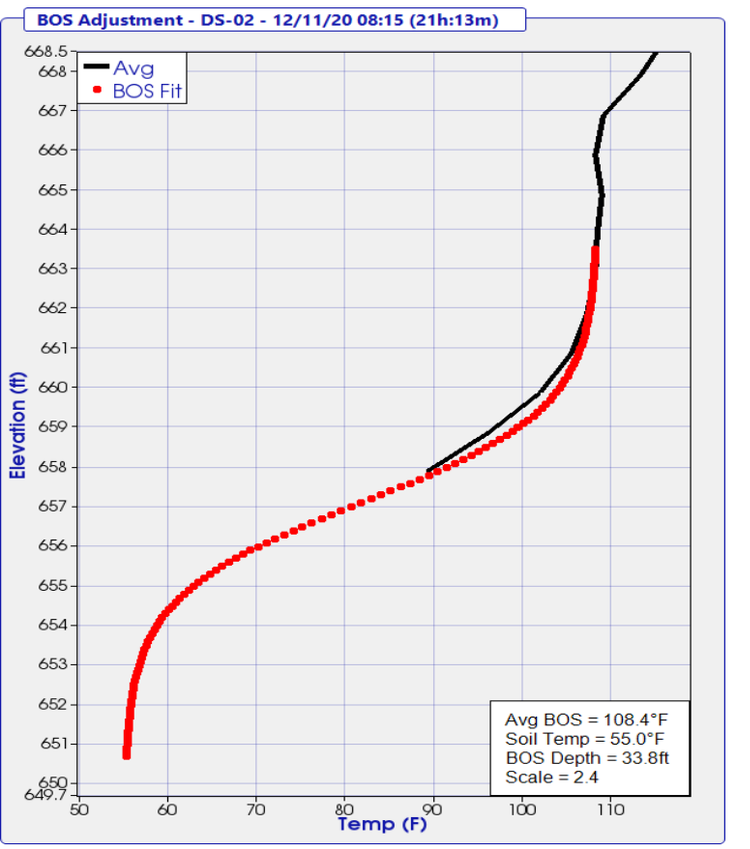

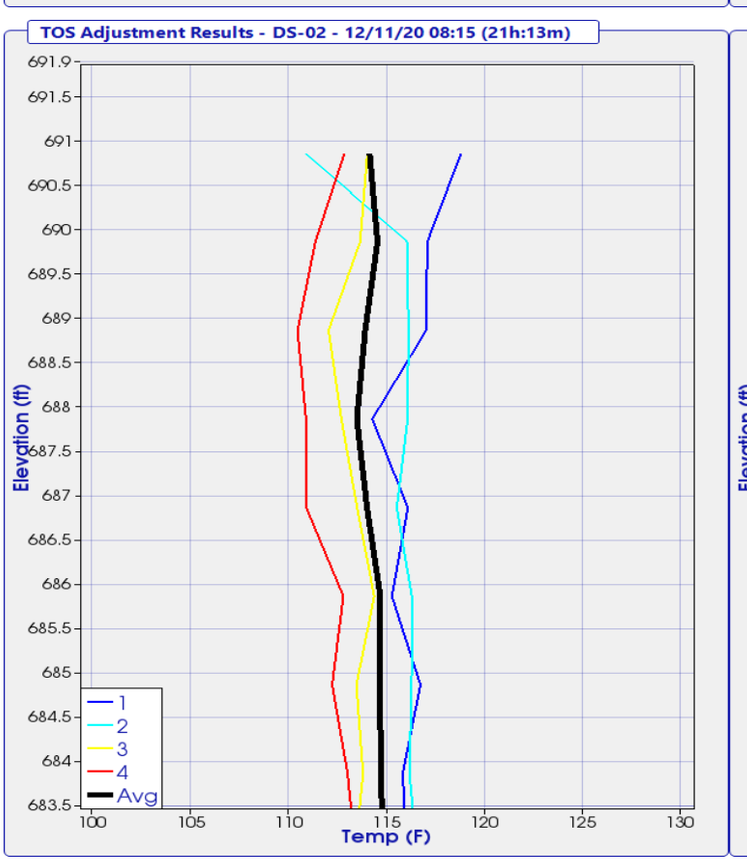

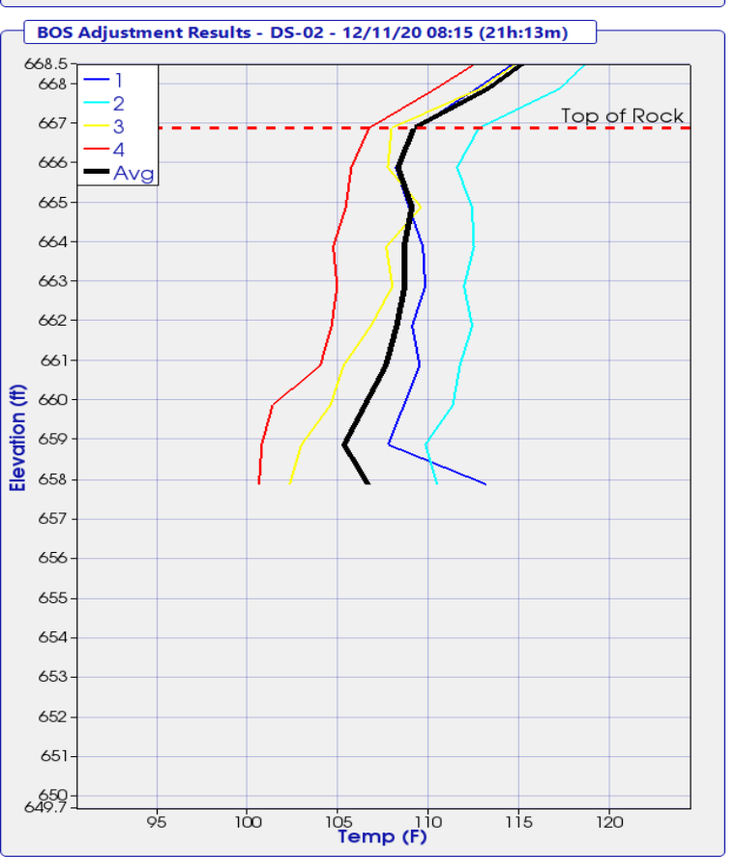

ERMAL FIELD LOG

Project: OC3
Pier No.: Fwd Abut

Date Placed: 12/10/2020
Shaft No.: D502

N

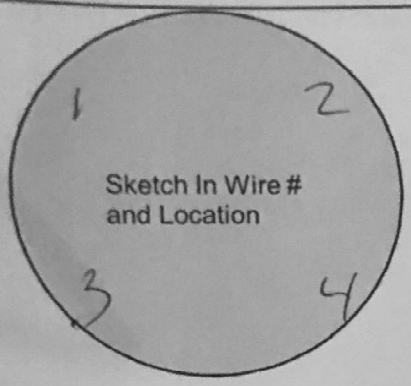

Wire #	Serial #	Wire Length (#nodes)	Nodes Above Concrete	Wire Tested After Install
1	14464	40		Yes
2	14471	↓		↓
3	13691			
4	13690			

Designate Northerly wire as #1

Wire-Wire Distance		
1-3 ____ in.	2-3 ____ in.	4-3 ____ in.
2-1 ____ in.	4-1 ____ in.	

Shaft Information	Design	As-Built
Shaft Dia.	____ in.	50 in.
Shaft Length	____ ft.	33.8 ft.
Concrete Vol.	____ cy.	17 cy.
Cage Length	____ ft.	33.25 ft.
Cage Dia.	____ in.	____ in.
Casing Dia. (perm./temp.)	____ in.	____ in.
Casing Length	____ ft.	____ ft.
Rock Socket Dia.	____ in.	____ in.
Rock Socket Length	____ ft.	9.8 ft.

Elevation

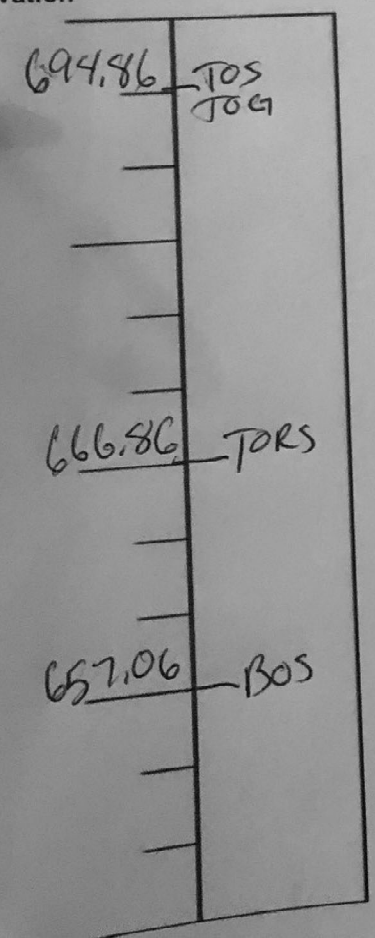

Field Notes:

Start of Placement -

End of Placement -

Placement Method -

Legend

TOC	Top of Casing	BOC	Bottom of Casing
TOG	Top of Ground	BORC	Bottom of Reinf. Cage
TOS	Top of Shaft	BOS	Bottom of Shaft
TORS	Top of Rock Socket	▼	Water Level

* indicate changes in diameter

4 Wire - Shaft

Please Submit with Concrete Placement Log and Installation Record

Completed By: [illegible]

TIP-R Results - Temperature Analysis Tools

Project: 195067-9 - Kokosing - OC3 Railroad TIP Phase 2
Shaft: DS-03
Timestamp: 12/05/20 08:48 (18h:38m)

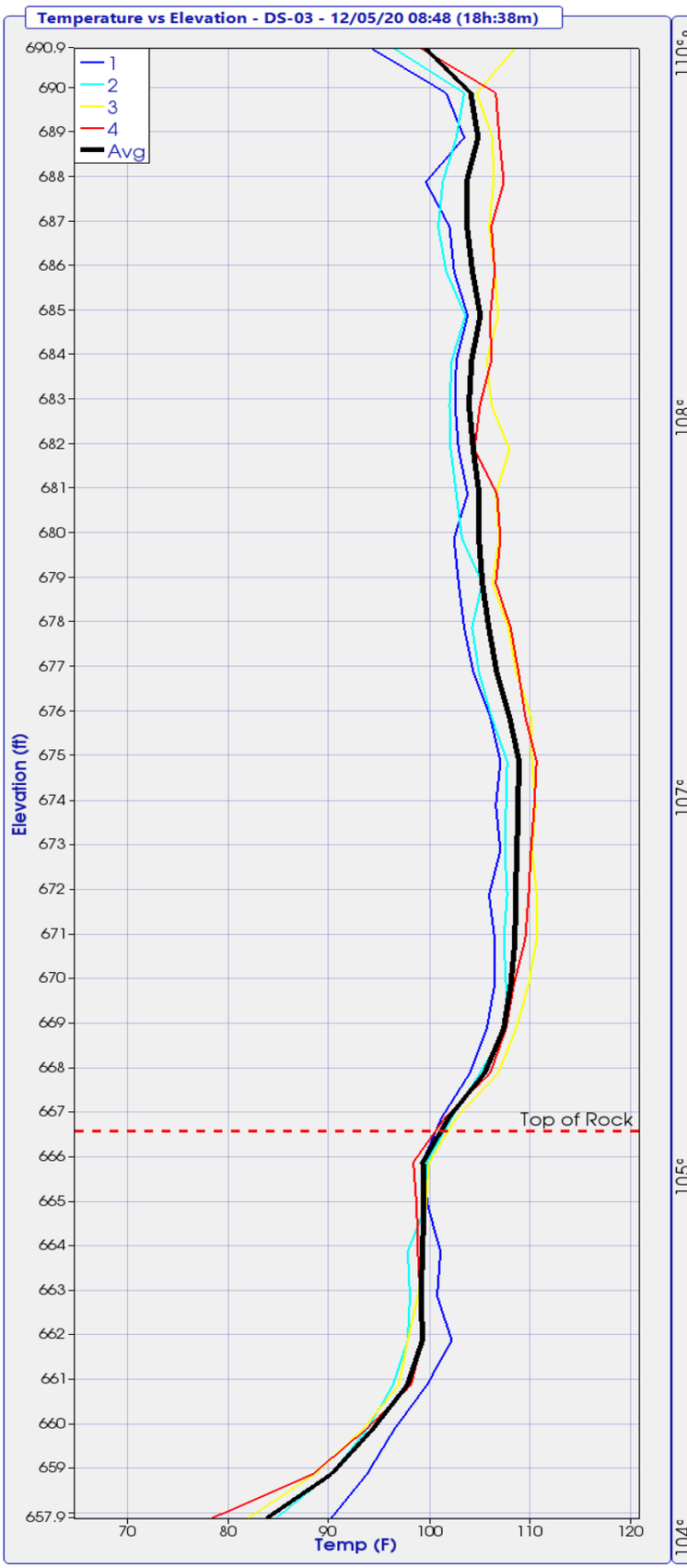

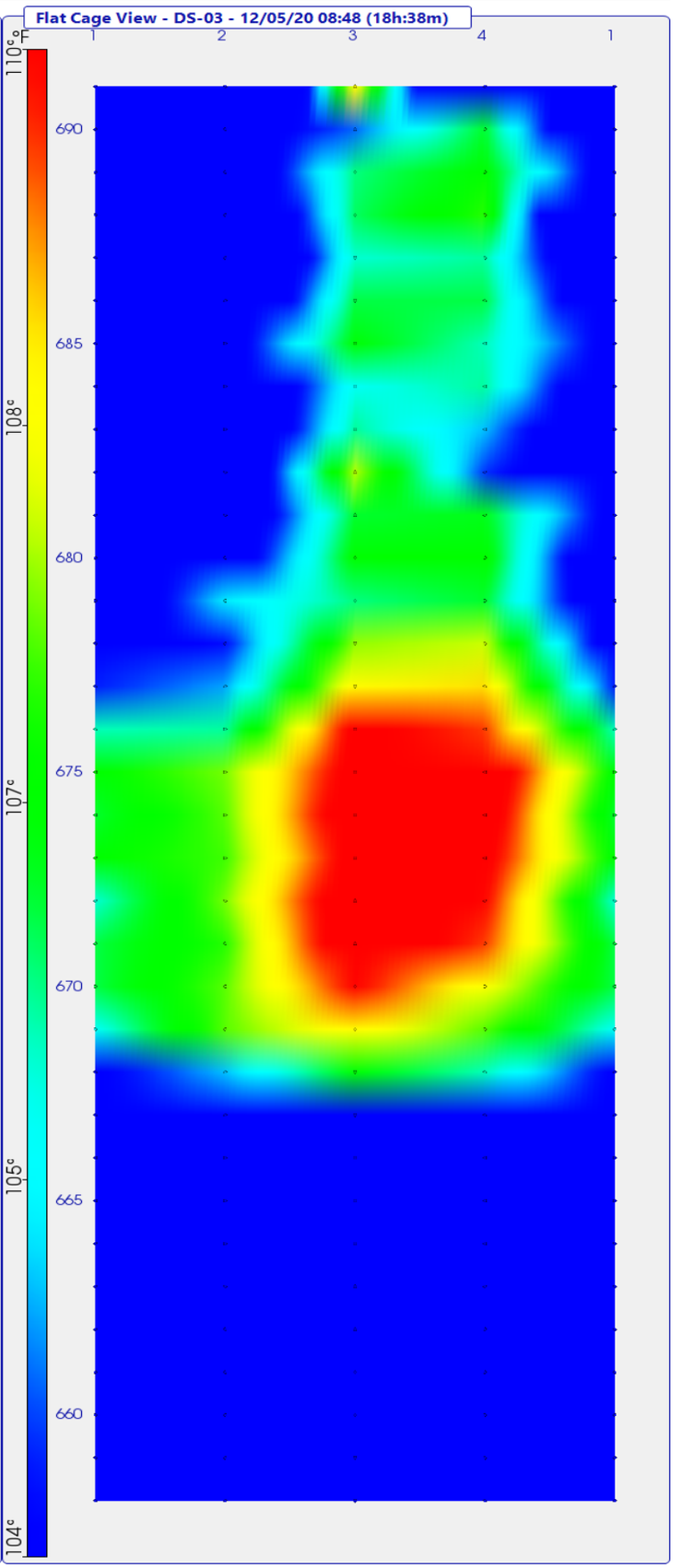

TIP-R Results - Radius Analysis Tools

Project: 195067-9 - Kokosing - OC3 Railroad TIP Phase 2
Shaft: DS-03
Timestamp: 12/05/20 08:48 (18h:38m)

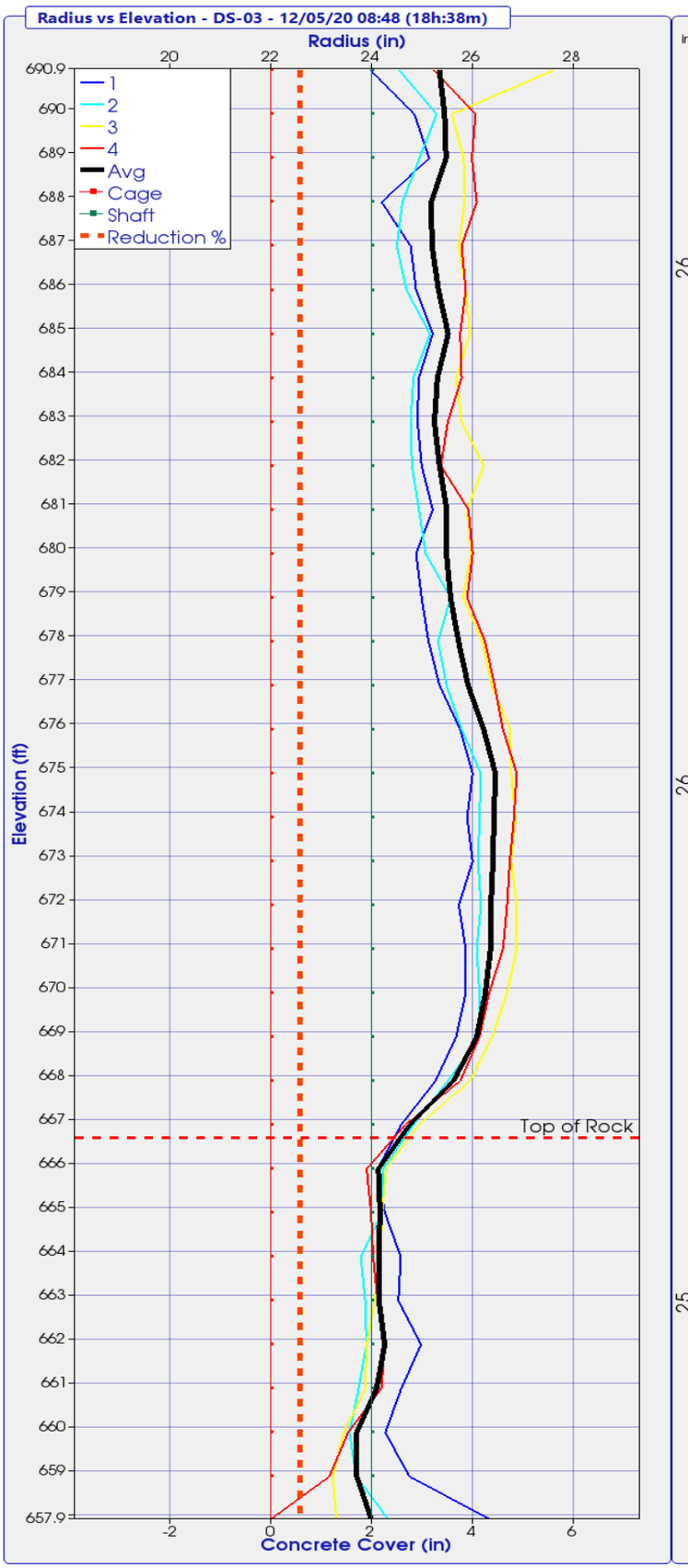

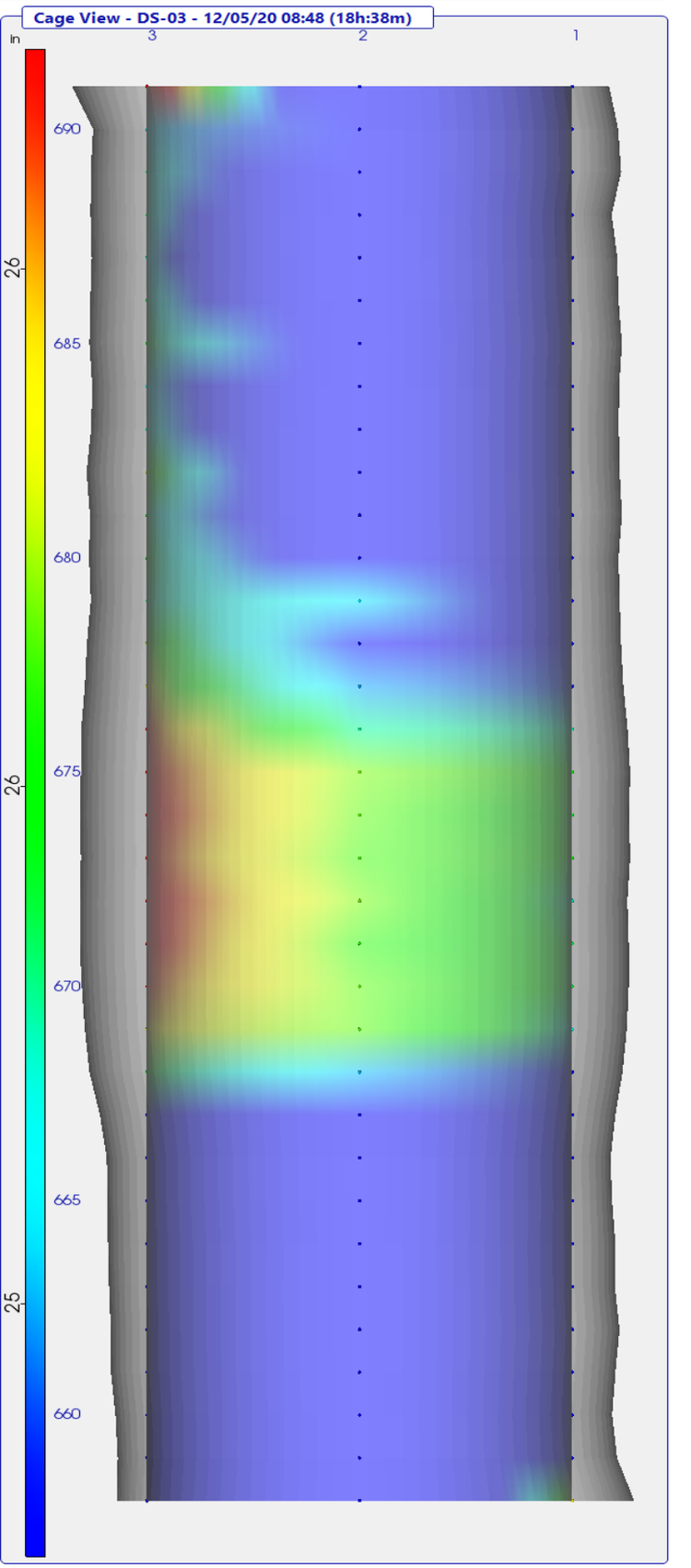

TIP-R Results - Radius Location Analysis

Project: 195067-9 - Kokosing - OC3 Railroad TIP Phase 2
Shaft: DS-03
Timestamp: 12/05/20 08:48 (18h:38m)

Adjustments Applied: Top (yes) Bottom (yes) Mid-Shaft (no)

Elevation (ft)	Wire 1 Radius (in)	Wire 2 Radius (in)	Wire 3 Radius (in)	Wire 4 Radius (in)	Effective Average Radius(in)
690.9	24.0	24.5	27.6	25.2	25.3
689.9	24.8	25.3	25.6	26.0	25.4
688.9	25.1	24.9	25.8	26.0	25.5
687.9	24.2	24.6	25.8	26.1	25.2
686.9	24.8	24.5	25.7	25.8	25.2
685.9	24.9	24.7	25.9	25.9	25.3
684.9	25.2	25.1	25.9	25.7	25.5
683.9	24.9	24.8	25.7	25.8	25.3
682.9	24.9	24.8	25.8	25.5	25.2
681.9	25.0	24.8	26.2	25.4	25.3
680.9	25.2	24.9	25.9	25.9	25.5
679.9	24.9	25.1	26.0	26.0	25.5
678.9	25.0	25.6	25.8	25.9	25.6
677.9	25.1	25.3	26.2	26.2	25.7
676.9	25.3	25.5	26.4	26.4	25.9
675.9	25.7	25.8	26.7	26.6	26.2
674.9	26.0	26.2	26.8	26.9	26.4
673.9	25.9	26.1	26.8	26.8	26.4
672.9	26.0	26.1	26.8	26.7	26.4
671.9	25.7	26.2	26.9	26.7	26.4
670.9	25.9	26.1	26.9	26.6	26.3
669.9	25.9	26.1	26.7	26.3	26.2
668.9	25.7	26.1	26.4	26.1	26.1
667.9	25.3	25.5	25.9	25.7	25.6
666.9	24.6	24.8	24.9	24.7	24.7
665.9	24.1	24.2	24.3	23.9	24.1
664.9	24.3	24.2	24.2	24.0	24.2
663.9	24.6	23.8	24.2	24.0	24.1
662.9	24.5	23.9	24.1	24.1	24.1
661.9	25.0	23.9	23.9	24.3	24.3
660.9	24.6	23.7	23.9	24.2	24.1
659.9	24.3	23.6	23.4	23.5	23.7
658.9	24.7	23.7	23.2	23.2	23.7
657.9	26.4	24.3	23.3	22.0	24.0

TIP-R Results - Radius Reduction Analysis

Project: 195067-9 - Kokosing - OC3 Railroad TIP Phase 2
Shaft: DS-03
Timestamp: 12/05/20 08:48 (18h:38m)

Adjustments Applied: Top (yes) Bottom (yes) Mid-Shaft (no)

Elevation (ft)	Design Radius (in)	Effective Radius (in)	Radius Reduction % > 6.00%
690.9	24.0	25.3	
689.9	24.0	25.4	
688.9	24.0	25.5	
687.9	24.0	25.2	
686.9	24.0	25.2	
685.9	24.0	25.3	
684.9	24.0	25.5	
683.9	24.0	25.3	
682.9	24.0	25.2	
681.9	24.0	25.3	
680.9	24.0	25.5	
679.9	24.0	25.5	
678.9	24.0	25.6	
677.9	24.0	25.7	
676.9	24.0	25.9	
675.9	24.0	26.2	
674.9	24.0	26.4	
673.9	24.0	26.4	
672.9	24.0	26.4	
671.9	24.0	26.4	
670.9	24.0	26.3	
669.9	24.0	26.2	
668.9	24.0	26.1	
667.9	24.0	25.6	
666.9	24.0	24.7	
665.9	24.0	24.1	
664.9	24.0	24.2	
663.9	24.0	24.1	
662.9	24.0	24.1	
661.9	24.0	24.3	
660.9	24.0	24.1	
659.9	24.0	23.7	
658.9	24.0	23.7	
657.9	24.0	24.0	

TIP-R Results - TOS/BOS Adjustments

Project: 195067-9 - Kokosing - OC3 Railroad TIP Phase 2
Shaft: DS-03
Timestamp: 12/05/20 08:48 (18h:38m)

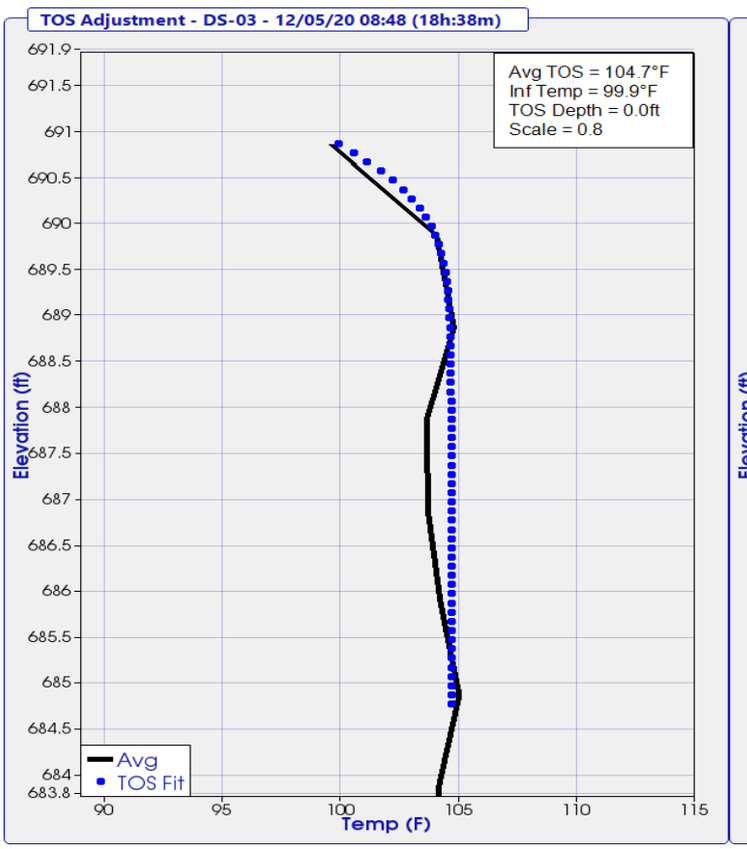

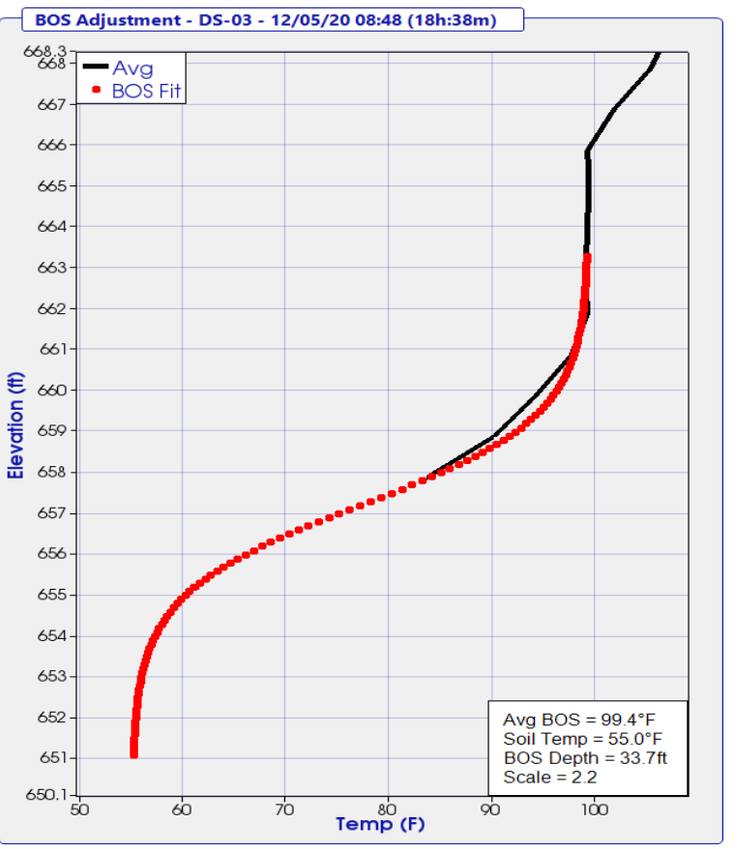

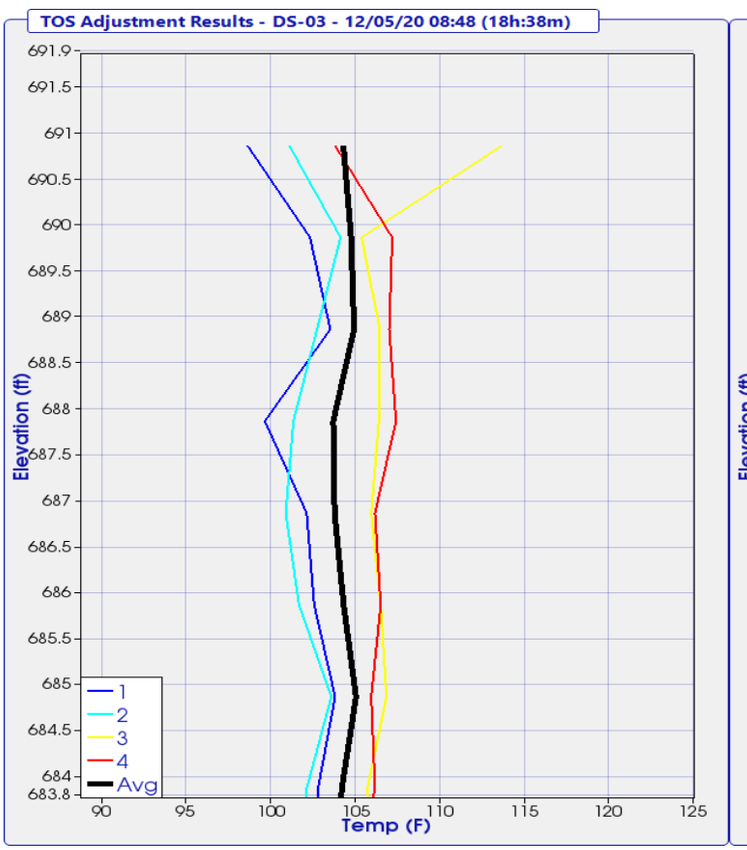

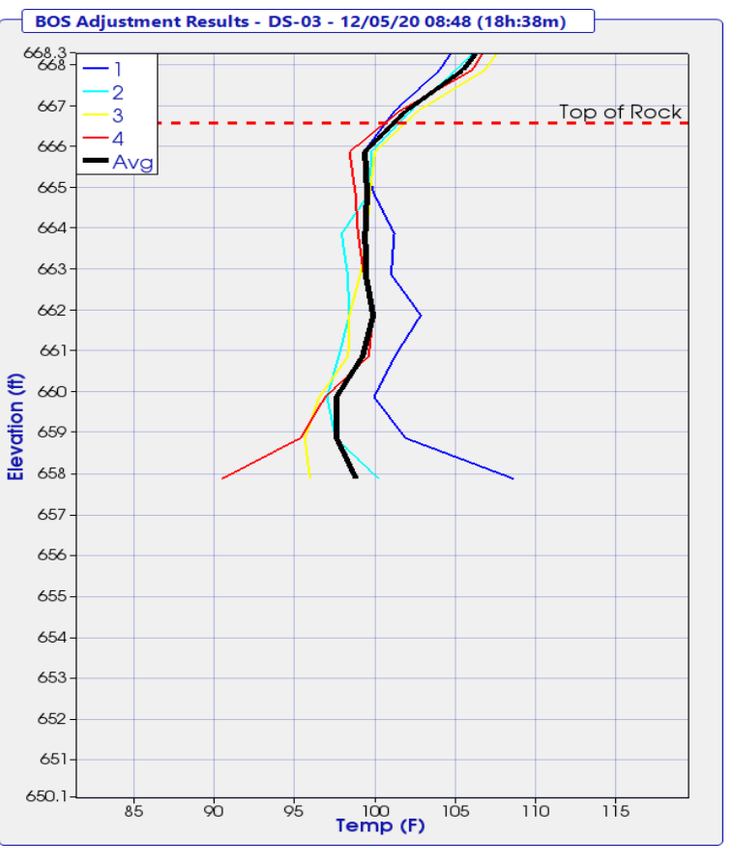

THERMAL FIELD LOG

Project: OC3
Pier No.: Ford Abut

Date Placed: 12/4/2020
Shaft No.: D503

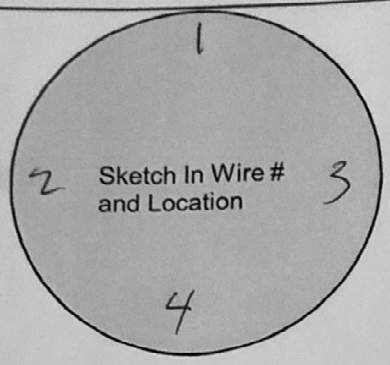

Wire #	Serial #	Wire Length (#nodes)	Nodes Above Concrete	Wire Tested After Install
1	18156	45	10	yes
2	18068	↓	↓	↓
3	18208	↓	↓	↓
4	18397	↓	↓	↓

Designate Northerly wire as #1

Wire-Wire Distance		
1-3 ____ in.	2-3 ____ in.	4-3 ____ in.
2-1 ____ in.	4-1 ____ in.	

Shaft Information	Design	As-Built
Shaft Dia.	____ in.	50 in.
Shaft Length	____ ft.	33.63 ft.
Concrete Vol.	____ cy.	17 cy.
Cage Length	____ ft.	33.25 ft.
Cage Dia.	____ in.	____ in.
Casing Dia. (perm./temp.)	____ in.	____ in.
Casing Length	____ ft.	____ ft.
Rock Socket Dia.	____ in.	____ in.
Rock Socket Length	____ ft.	9.3 ft.

Elevation

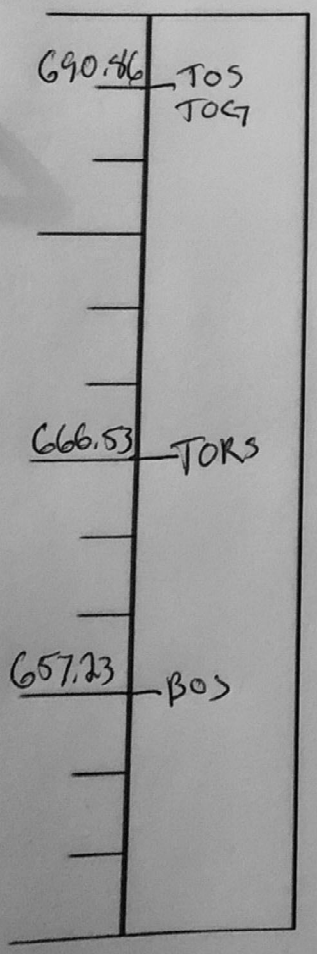

*** indicate changes in diameter**

Field Notes:

Start of Placement -

End of Placement -

Placement Method -

Legend

TOC	Top of Casing	BOC	Bottom of Casing
TOG	Top of Ground	BORC	Bottom of Reinf. Cage
TOS	Top of Shaft	BOS	Bottom of Shaft
TORS	Top of Rock Socket	▼	Water Level

Completed By: Adam Hah

Please Submit with Concrete Placement Log and Installation Record

4 Wire - Shaft

TIP-R Results - Temperature Analysis Tools

Project: 195067-9 - Kokosing - OC3 Railroad TIP Phase 2
Shaft: DS-04
Timestamp: 12/10/20 10:29 (19h:20m)

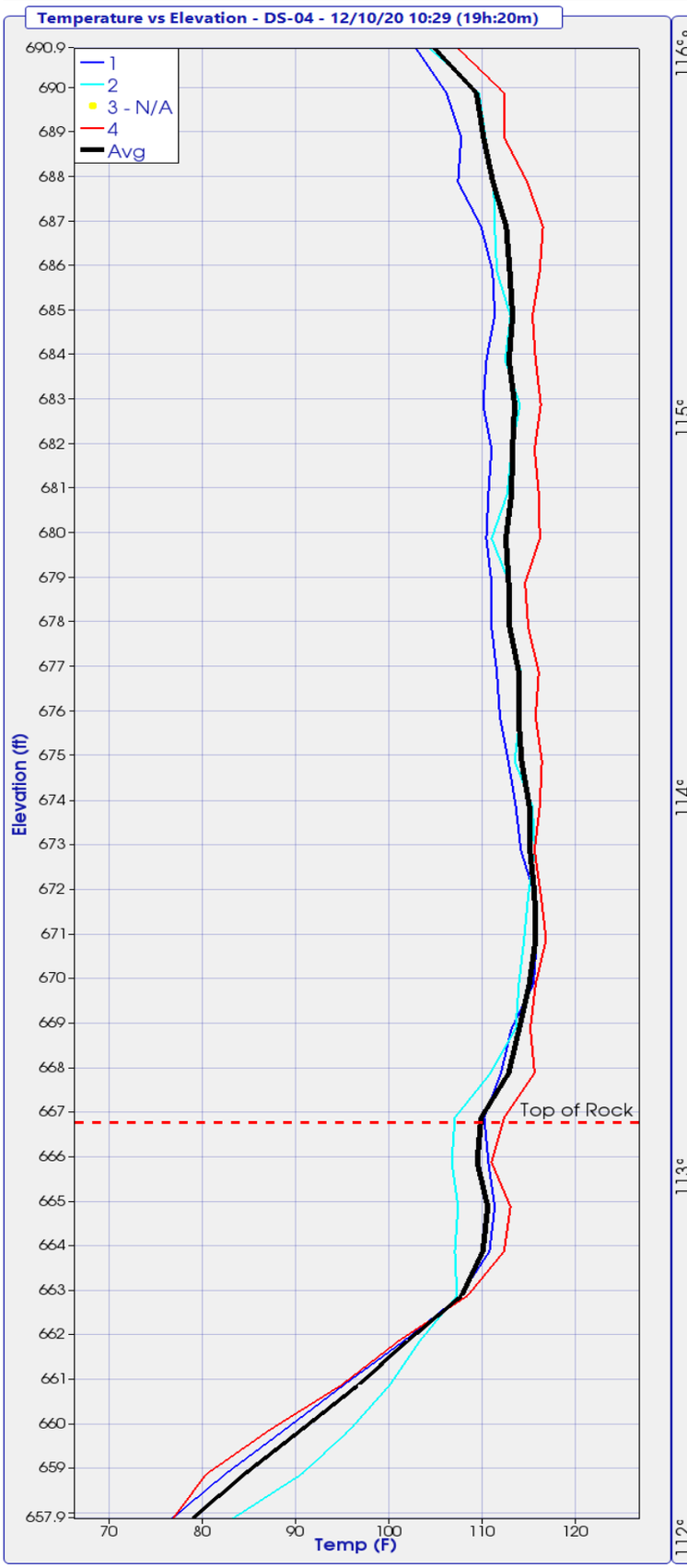

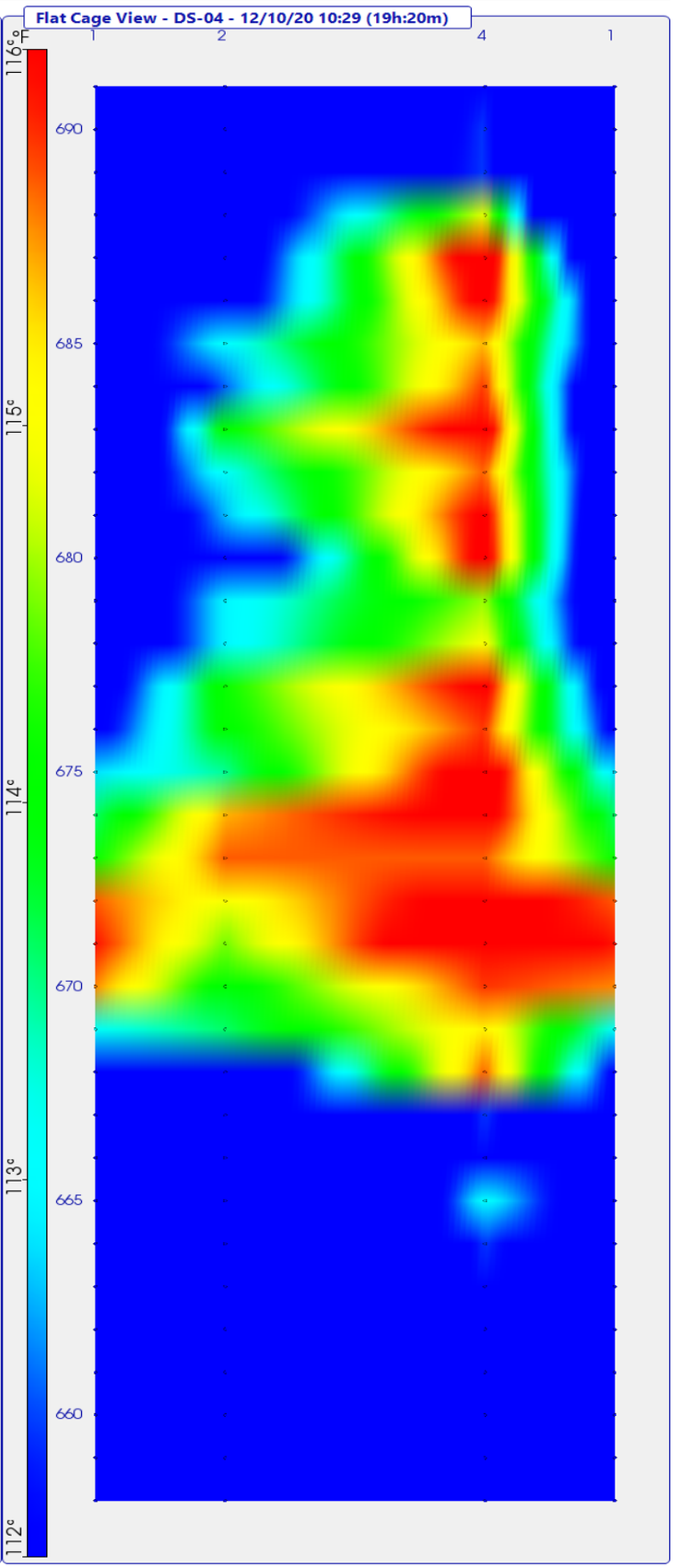

TIP-R Results - Radius Analysis Tools

Project: 195067-9 - Kokosing - OC3 Railroad TIP Phase 2
Shaft: DS-04
Timestamp: 12/10/20 10:29 (19h:20m)

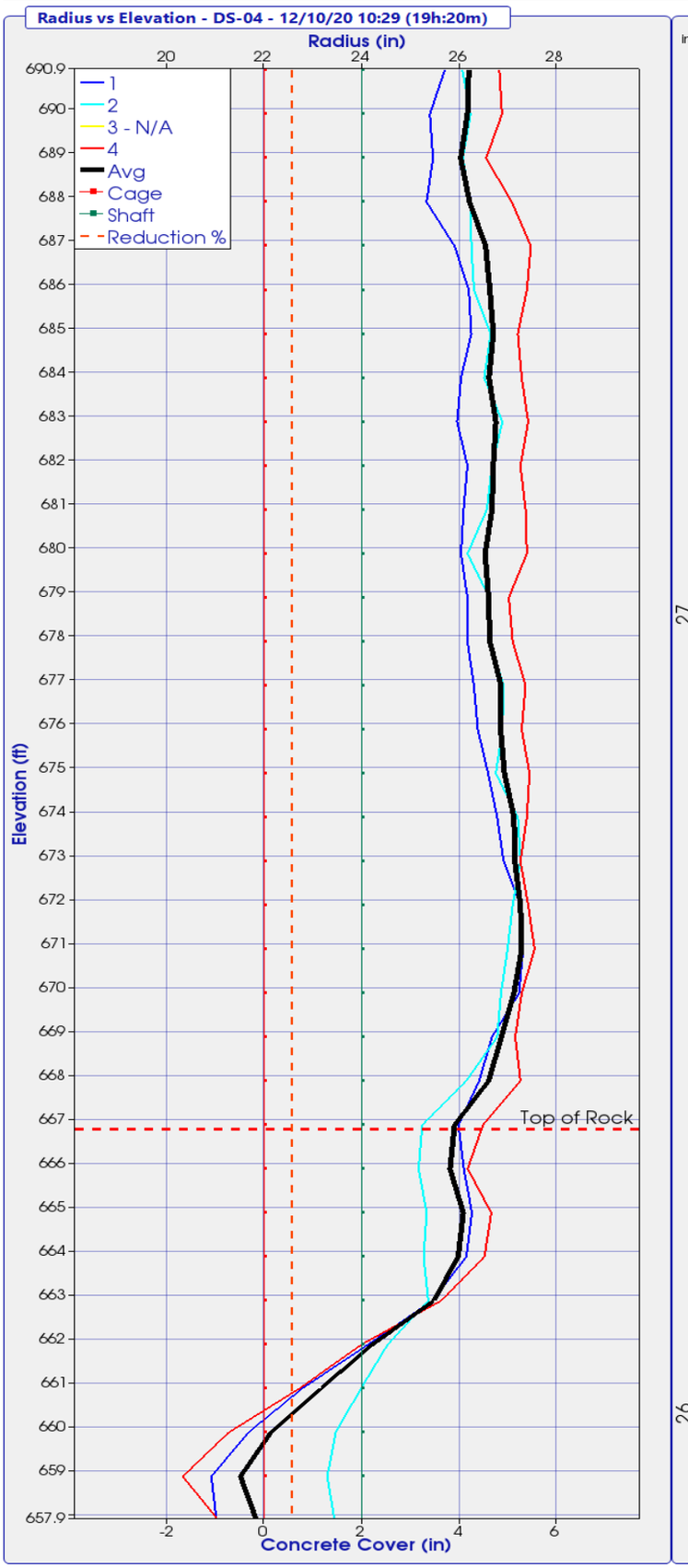

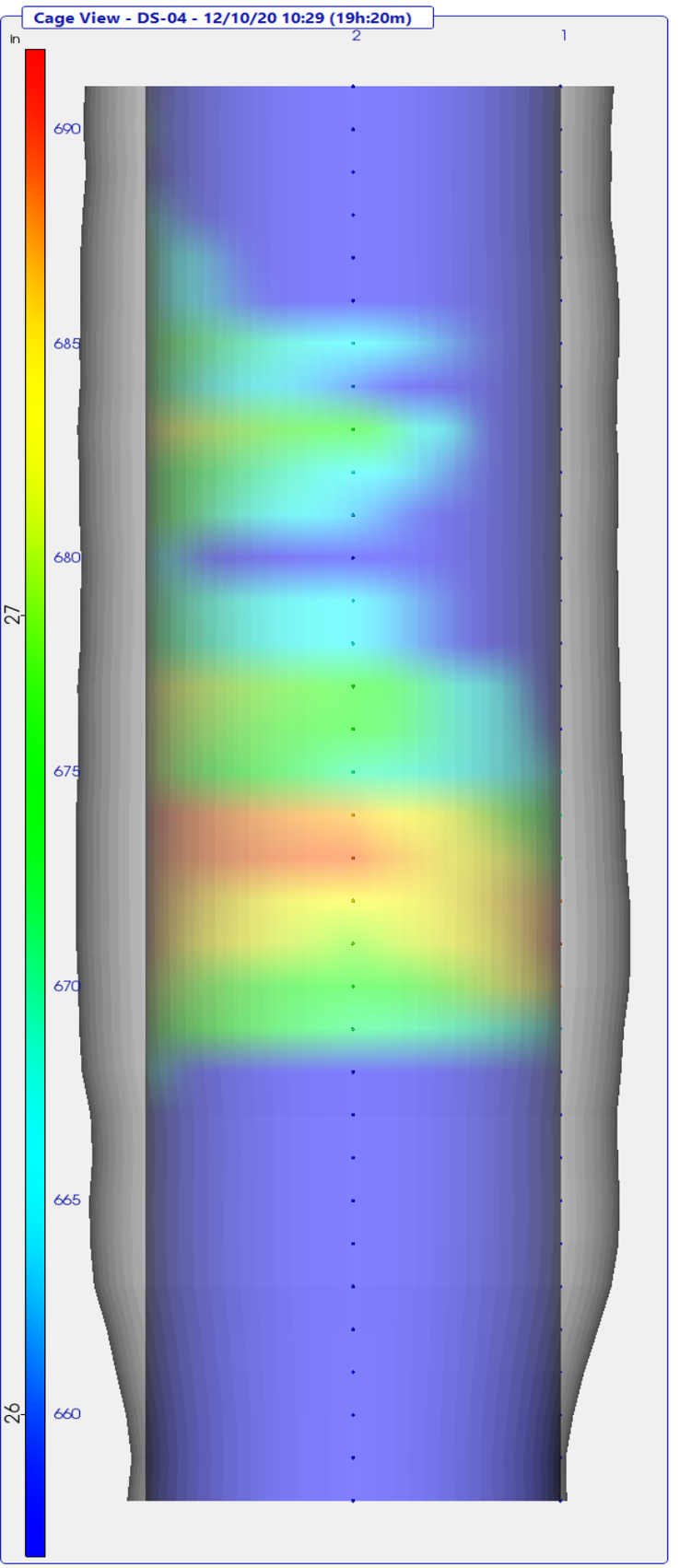

TIP-R Results - Temperature Analysis Tools

Project: 195067-9 - Kokosing - OC3 Railroad TIP Phase 2
Shaft: DS-04
Timestamp: 12/10/20 10:29 (19h:20m)

Pile Dynamics, Inc.

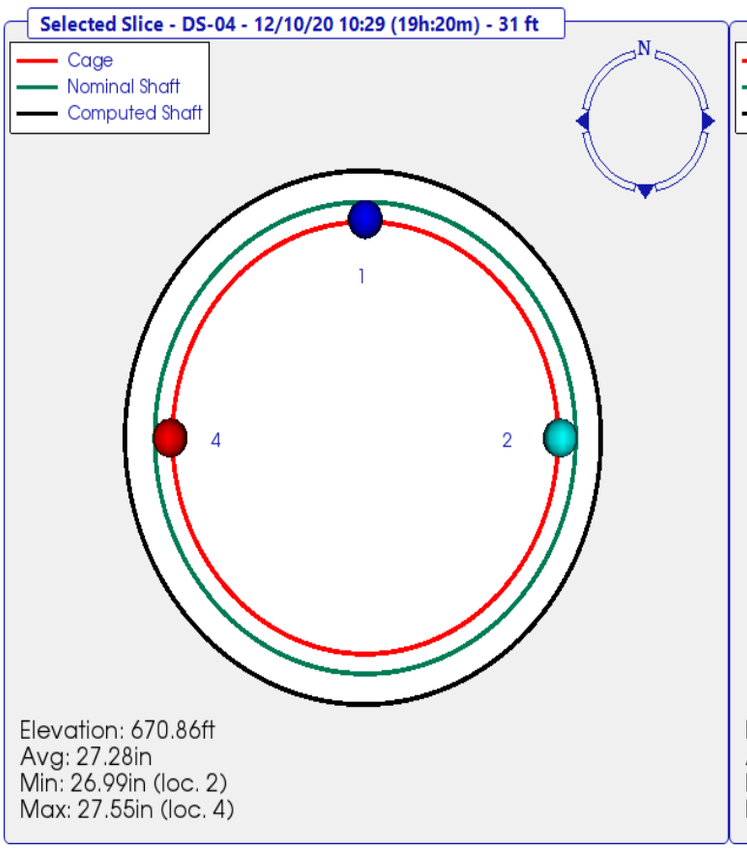

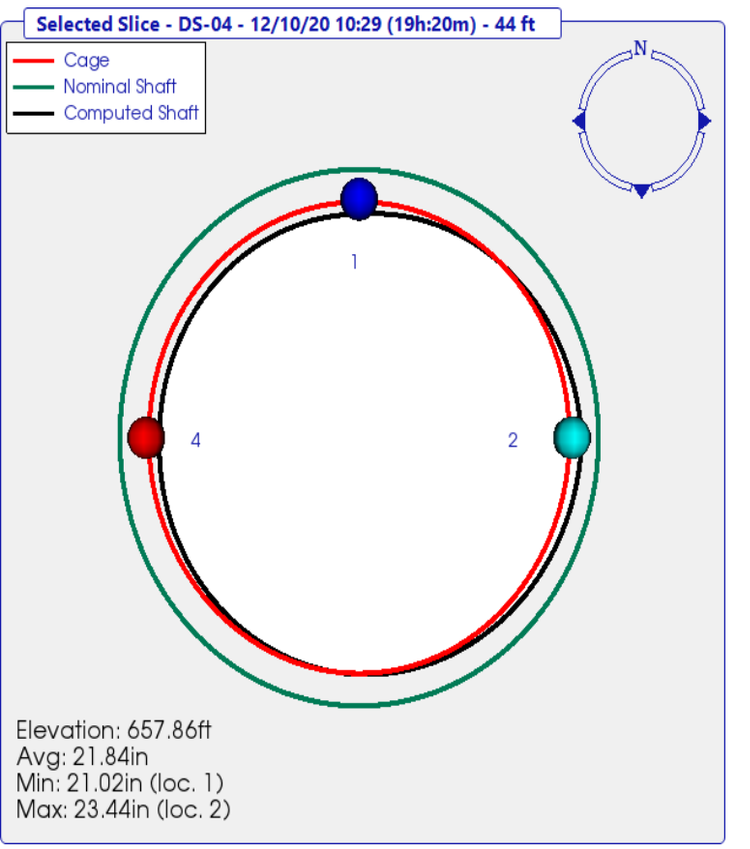

TIP-R Results - Radius Location Analysis

Project: 195067-9 - Kokosing - OC3 Railroad TIP Phase 2
Shaft: DS-04
Timestamp: 12/10/20 10:29 (19h:20m)

Adjustments Applied: Top (yes) Bottom (yes) Mid-Shaft (no)

Elevation (ft)	Wire 1 Radius (in)	Wire 2 Radius (in)	Wire 3 Radius (in)	Wire 4 Radius (in)	Effective Average Radius(in)
690.9	25.7	26.1		26.8	26.2
689.9	25.4	26.2		26.9	26.2
688.9	25.5	26.1		26.6	26.0
687.9	25.3	26.2		27.1	26.2
686.9	25.9	26.3		27.5	26.5
685.9	26.2	26.3		27.4	26.6
684.9	26.2	26.6		27.2	26.7
683.9	26.0	26.5		27.3	26.6
682.9	26.0	26.9		27.4	26.8
681.9	26.2	26.7		27.3	26.7
680.9	26.1	26.6		27.4	26.7
679.9	26.0	26.2		27.4	26.5
678.9	26.2	26.6		27.0	26.6
677.9	26.2	26.6		27.1	26.6
676.9	26.3	26.9		27.4	26.9
675.9	26.4	26.9		27.3	26.9
674.9	26.6	26.8		27.4	26.9
673.9	26.8	27.2		27.4	27.1
672.9	26.9	27.3		27.3	27.1
671.9	27.3	27.1		27.4	27.3
670.9	27.3	27.0		27.5	27.3
669.9	27.2	26.9		27.3	27.1
668.9	26.7	26.8		27.2	26.9
667.9	26.4	26.1		27.3	26.6
666.9	26.0	25.2		26.5	25.9
665.9	26.1	25.2		26.2	25.8
664.9	26.3	25.3		26.7	26.1
663.9	26.1	25.3		26.5	26.0
662.9	25.4	25.4		25.6	25.5
661.9	24.1	24.5		24.0	24.2
660.9	22.8	24.0		22.7	23.2
659.9	21.7	23.5		21.3	22.1
658.9	20.9	23.3		20.3	21.5
657.9	21.0	23.4		21.1	21.8

TIP-R Results - Radius Reduction Analysis

Project: 195067-9 - Kokosing - OC3 Railroad TIP Phase 2
Shaft: DS-04
Timestamp: 12/10/20 10:29 (19h:20m)

Adjustments Applied: Top (yes) Bottom (yes) Mid-Shaft (no)

Elevation (ft)	Design Radius (in)	Effective Radius (in)	Radius Reduction % > 6.00%
690.9	24.0	26.2	
689.9	24.0	26.2	
688.9	24.0	26.0	
687.9	24.0	26.2	
686.9	24.0	26.5	
685.9	24.0	26.6	
684.9	24.0	26.7	
683.9	24.0	26.6	
682.9	24.0	26.8	
681.9	24.0	26.7	
680.9	24.0	26.7	
679.9	24.0	26.5	
678.9	24.0	26.6	
677.9	24.0	26.6	
676.9	24.0	26.9	
675.9	24.0	26.9	
674.9	24.0	26.9	
673.9	24.0	27.1	
672.9	24.0	27.1	
671.9	24.0	27.3	
670.9	24.0	27.3	
669.9	24.0	27.1	
668.9	24.0	26.9	
667.9	24.0	26.6	
666.9	24.0	25.9	
665.9	24.0	25.8	
664.9	24.0	26.1	
663.9	24.0	26.0	
662.9	24.0	25.5	
661.9	24.0	24.2	
660.9	24.0	23.2	
659.9	24.0	22.1	7.8
658.9	24.0	21.5	10.4
657.9	24.0	21.8	9.0

TIP-R Results - TOS/BOS Adjustments

Project: 195067-9 - Kokosing - OC3 Railroad TIP Phase 2
Shaft: DS-04
Timestamp: 12/10/20 10:29 (19h:20m)

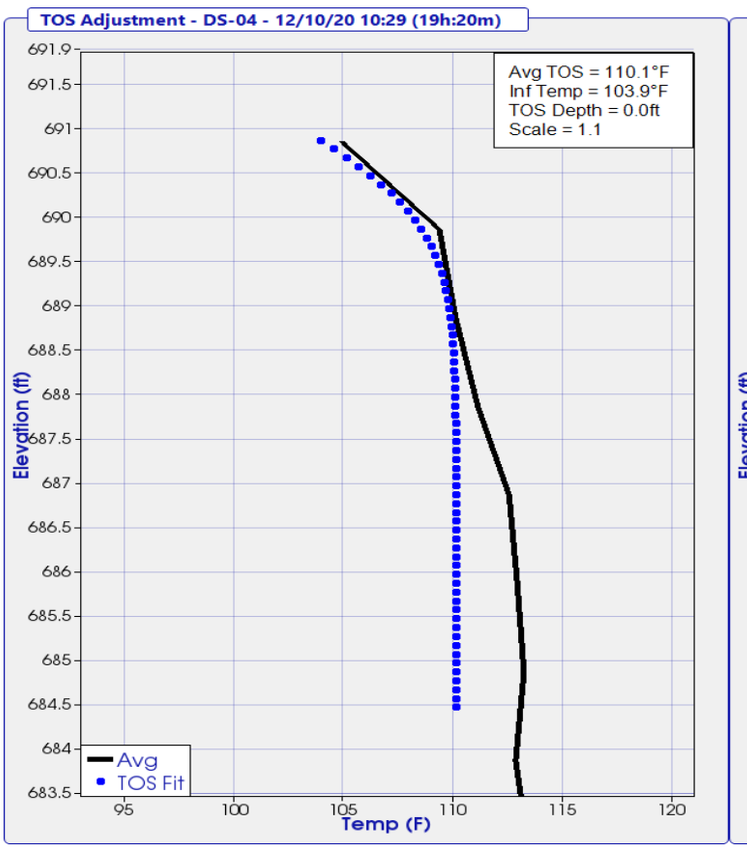

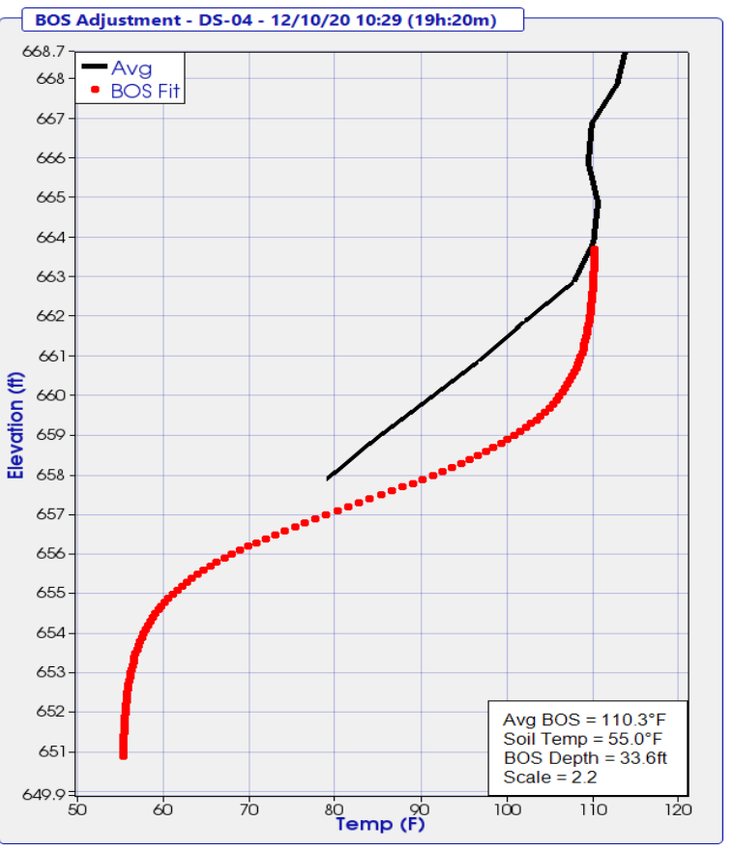

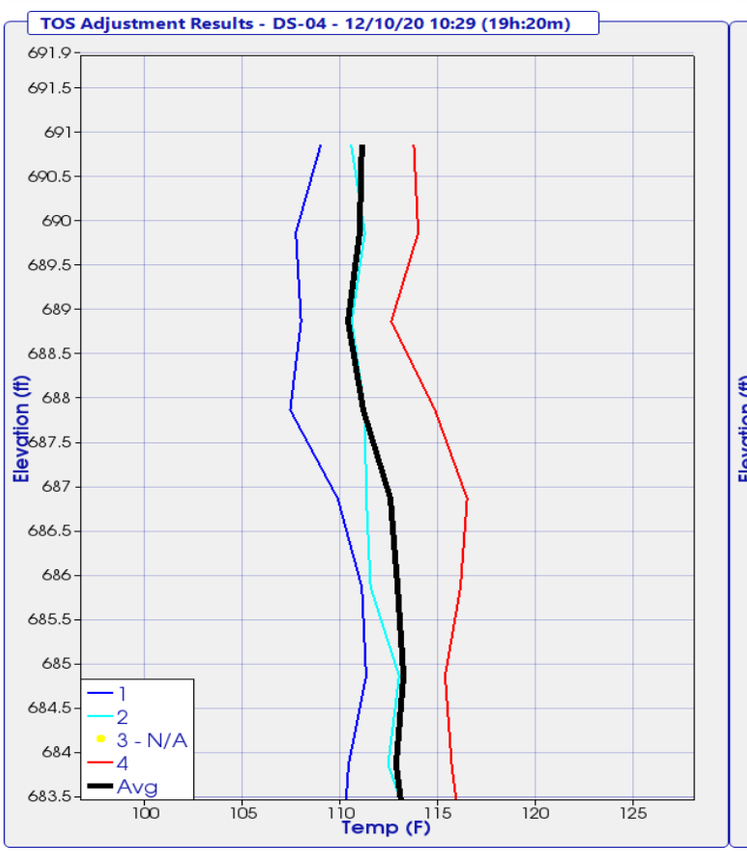

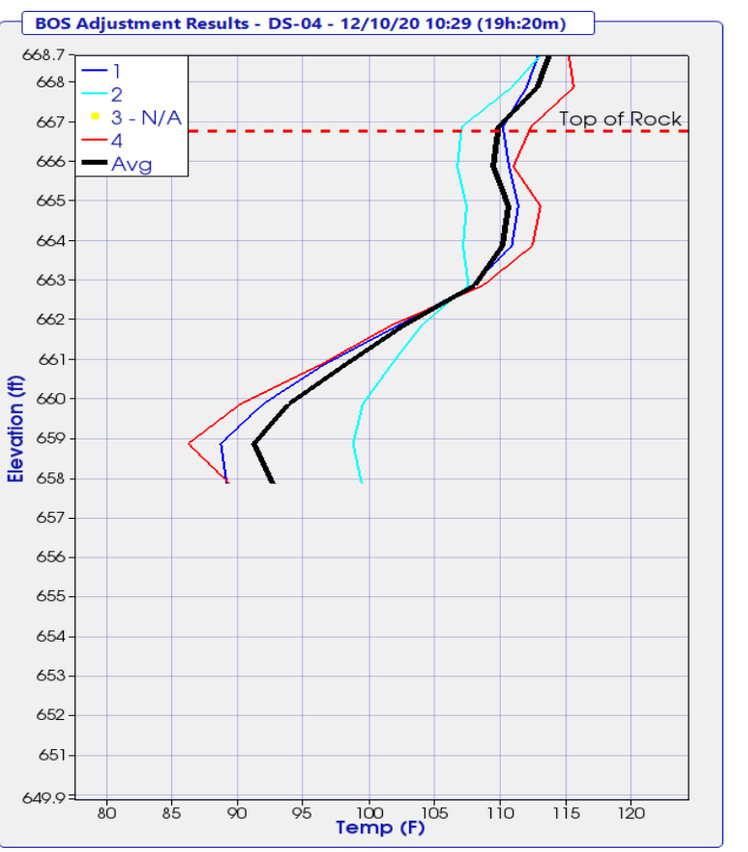

THERMAL FIELD LOG

Project: OCS
Pier No.: East Abut

Date Placed: ~~DS04~~ 12/9/20
Shaft No.: DS04

N

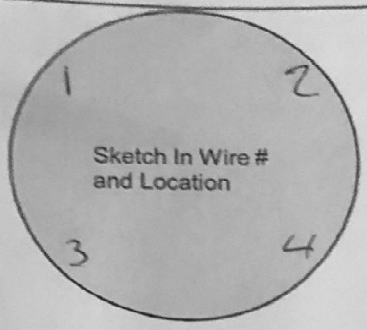

Wire #	Serial #	Wire Length (#nodes)	Nodes Above Concrete	Wire Tested After Install
1	13686	40		Yes
2	45743	↓		↓
3	45738			
4	45740	↓		↓

Designate Northerly wire as #1

Wire-Wire Distance		
1-3 ____ in.	2-3 ____ in.	4-3 ____ in.
2-1 ____ in.	4-1 ____ in.	

Shaft Information	Design	As-Built
Shaft Dia.	____ in.	50 in.
Shaft Length	____ ft.	33.5 ft.
Concrete Vol.	____ cy.	18 cy.
Cage Length	____ ft.	33.25 ft.
Cage Dia.	____ in.	____ in.
Casing Dia. (perm./temp.)	____ in.	____ in.
Casing Length	____ ft.	____ ft.
Rock Socket Dia.	____ in.	____ in.
Rock Socket Length	____ ft.	9.36 ft.

Elevation

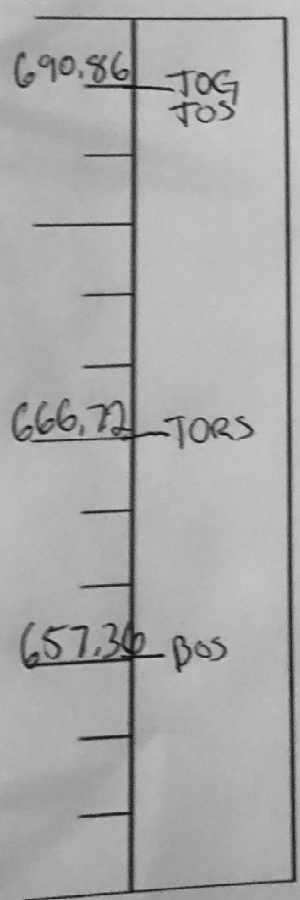

Field Notes:

Start of Placement -

End of Placement -

Placement Method -

Wire #4 broke while Pulling Casing
Spliced wires back together

Legend

TOC	Top of Casing	BOC	Bottom of Casing
TOG	Top of Ground	BORC	Bottom of Reinf. Cage
TOS	Top of Shaft	BOS	Bottom of Shaft
TORS	Top of Rock Socket	▼	Water Level

* indicate changes in diameter

Completed By: [signature]

Please Submit with Concrete Placement Log and Installation Record

4 Wire - Shaft

TIP-R Results - Temperature Analysis Tools

Project: 195067-9 - Kokosing - OC3 Railroad TIP Phase 2
Shaft: DS-05
Timestamp: 12/05/20 03:51 (16h:43m)

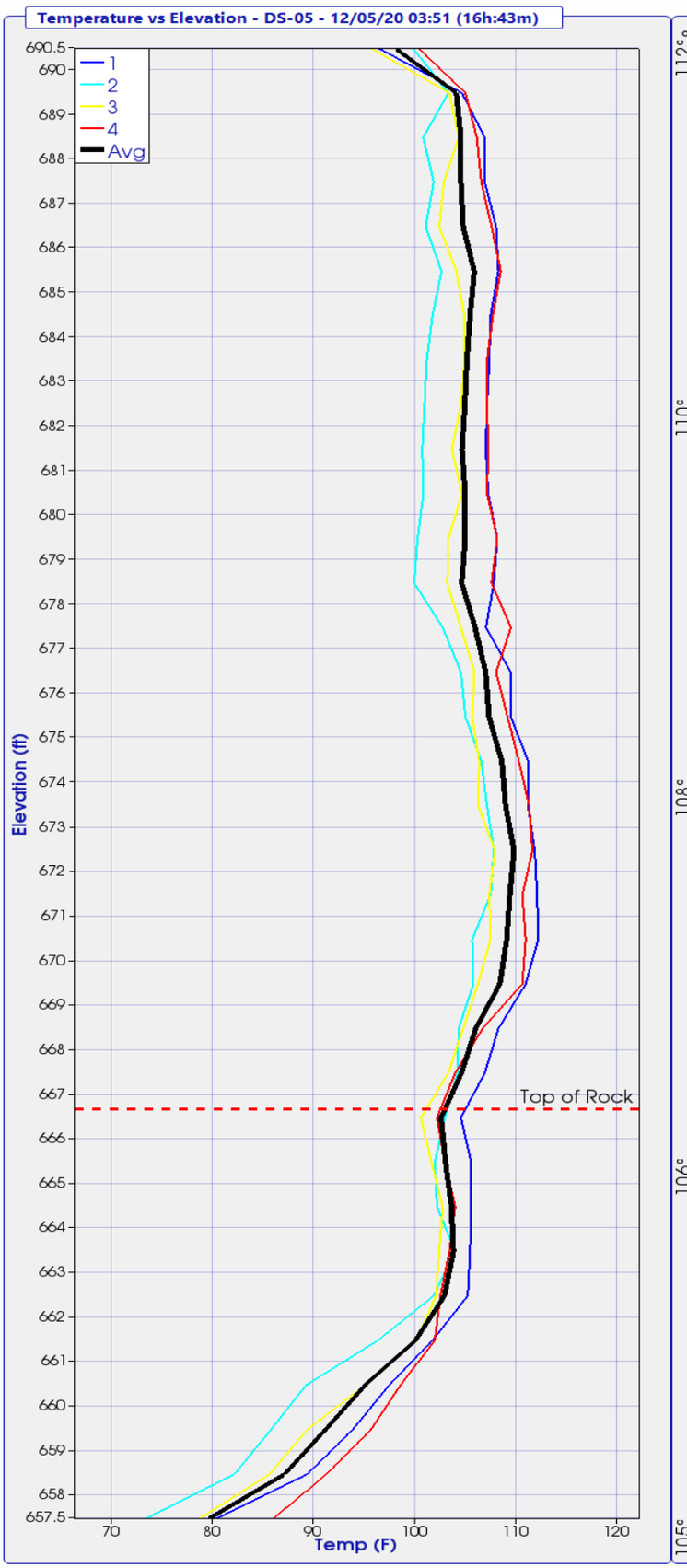

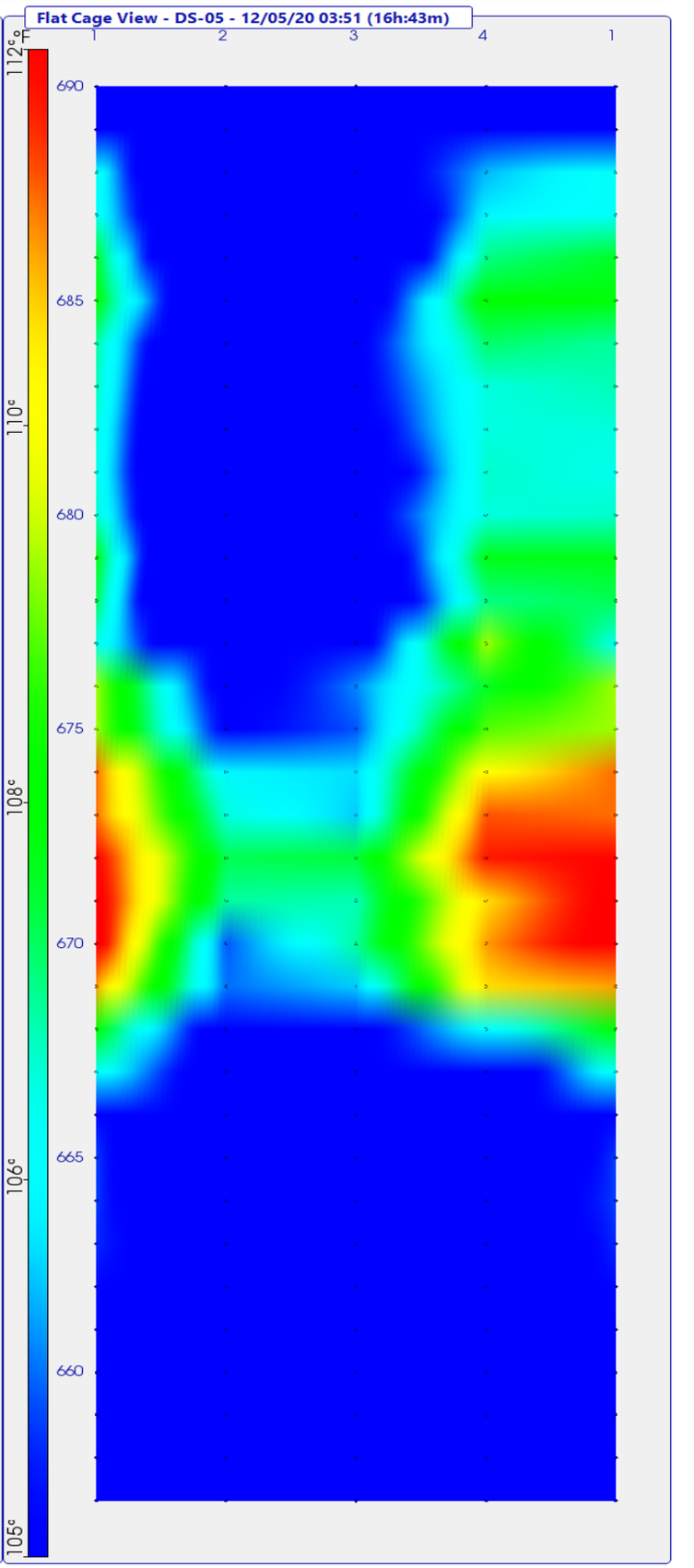

TIP-R Results - Radius Analysis Tools

Project: 195067-9 - Kokosing - OC3 Railroad TIP Phase 2
Shaft: DS-05
Timestamp: 12/05/20 03:51 (16h:43m)

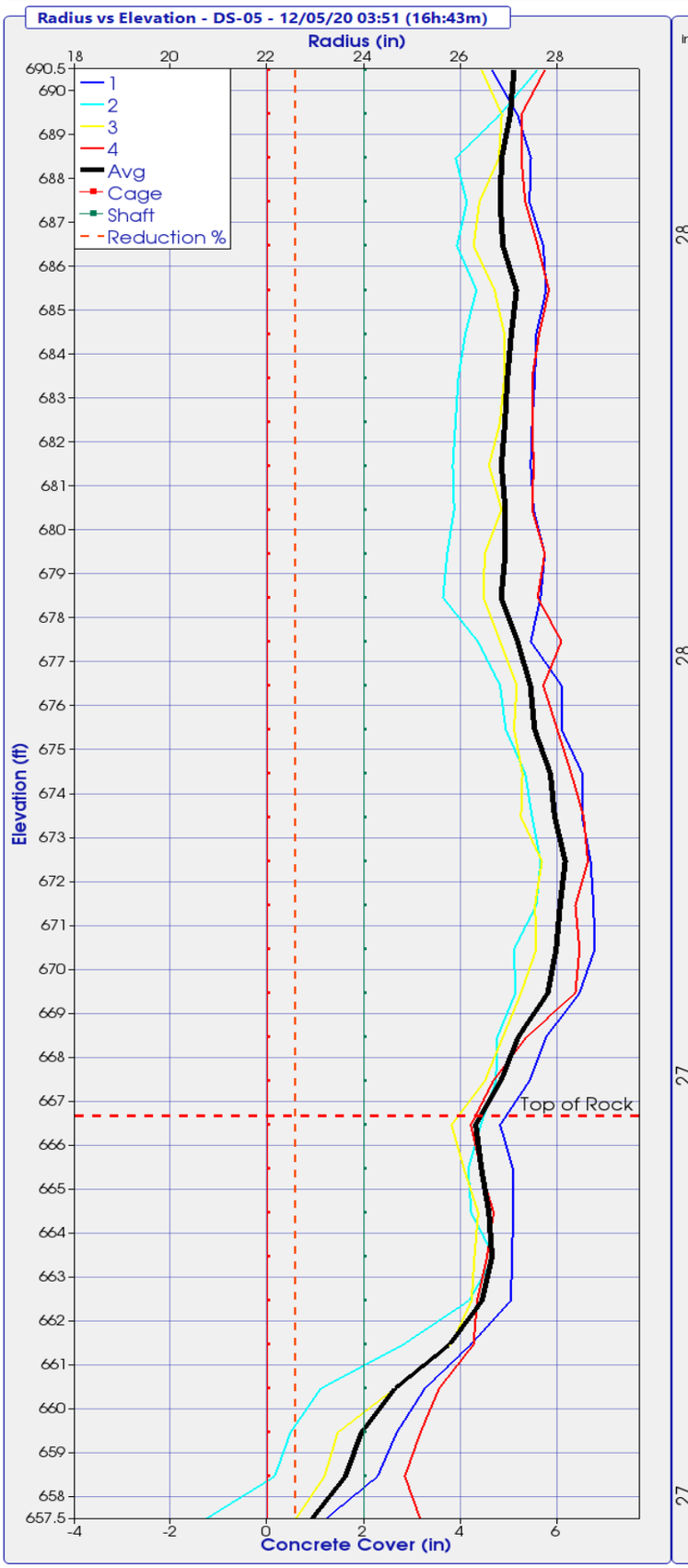

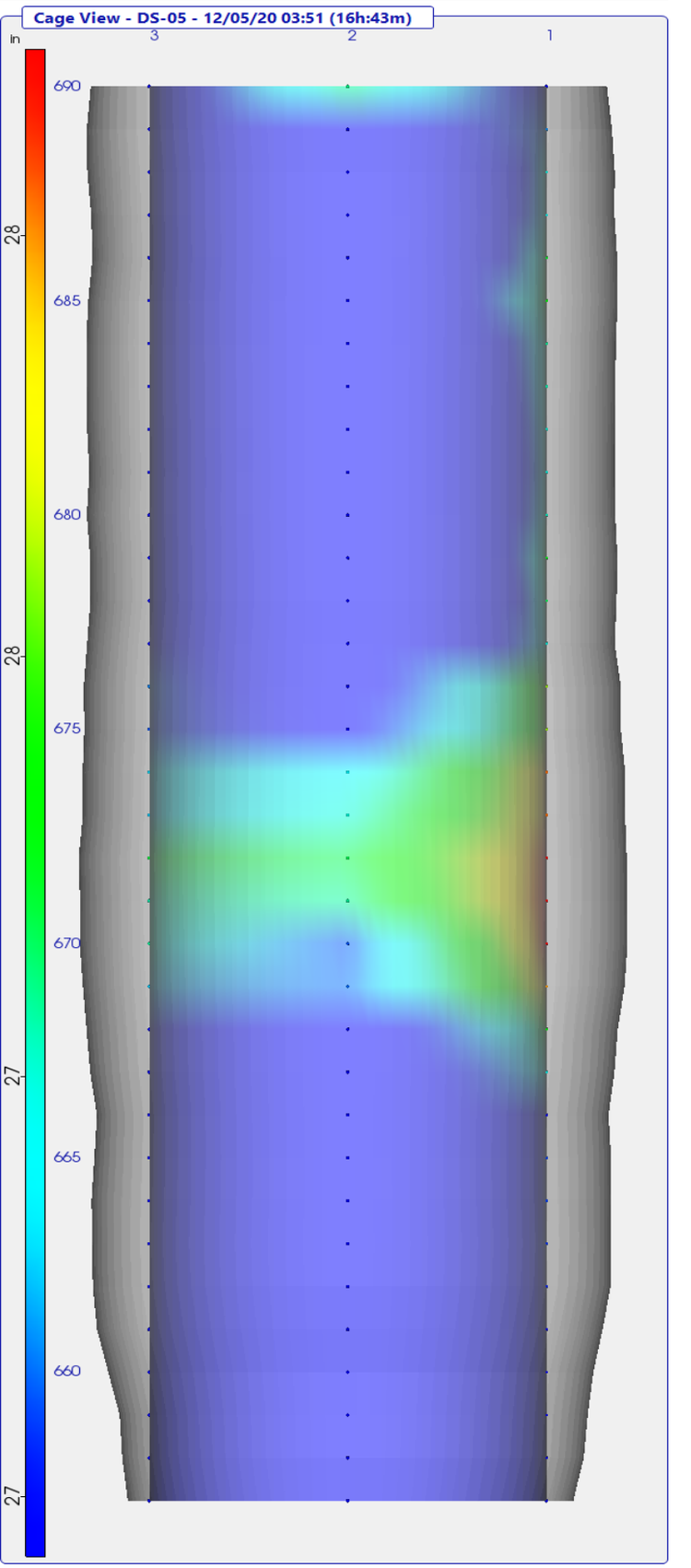

TIP-R Results - Radius Location Analysis

Project: 195067-9 - Kokosing - OC3 Railroad TIP Phase 2
Shaft: DS-05
Timestamp: 12/05/20 03:51 (16h:43m)

Adjustments Applied: Top (yes) Bottom (yes) Mid-Shaft (no)

Elevation (ft)	Wire 1 Radius (in)	Wire 2 Radius (in)	Wire 3 Radius (in)	Wire 4 Radius (in)	Effective Average Radius(in)
690.5	26.7	27.6	26.4	27.7	27.1
689.5	27.2	26.8	26.9	27.3	27.0
688.5	27.5	25.9	26.8	27.3	26.8
687.5	27.4	26.1	26.4	27.3	26.8
686.5	27.7	25.9	26.3	27.6	26.9
685.5	27.8	26.3	26.7	27.8	27.2
684.5	27.6	26.1	26.9	27.6	27.0
683.5	27.5	26.0	26.9	27.5	27.0
682.5	27.5	25.9	26.8	27.5	26.9
681.5	27.5	25.8	26.6	27.5	26.8
680.5	27.5	25.9	26.8	27.5	26.9
679.5	27.7	25.7	26.5	27.7	26.9
678.5	27.7	25.6	26.5	27.6	26.8
677.5	27.5	26.4	26.8	28.1	27.2
676.5	28.1	26.8	27.2	27.7	27.4
675.5	28.1	26.9	27.1	28.0	27.5
674.5	28.5	27.3	27.3	28.3	27.9
673.5	28.5	27.5	27.2	28.5	27.9
672.5	28.7	27.7	27.7	28.6	28.2
671.5	28.7	27.6	27.5	28.4	28.1
670.5	28.8	27.1	27.6	28.5	28.0
669.5	28.5	27.1	27.2	28.4	27.8
668.5	27.8	26.8	26.9	27.4	27.2
667.5	27.4	26.7	26.5	26.7	26.8
666.5	26.8	26.4	25.8	26.2	26.3
665.5	27.1	26.2	26.1	26.4	26.4
664.5	27.1	26.2	26.4	26.7	26.6
663.5	27.1	26.7	26.3	26.5	26.6
662.5	27.0	26.2	26.2	26.3	26.4
661.5	26.2	24.8	25.8	26.3	25.8
660.5	25.3	23.1	24.6	25.6	24.6
659.5	24.7	22.5	23.5	25.2	23.9
658.5	24.3	22.1	23.2	24.8	23.6
657.5	23.2	20.7	22.6	25.2	22.9

TIP-R Results - Radius Reduction Analysis

Project: 195067-9 - Kokosing - OC3 Railroad TIP Phase 2
Shaft: DS-05
Timestamp: 12/05/20 03:51 (16h:43m)

Adjustments Applied: Top (yes) Bottom (yes) Mid-Shaft (no)

Elevation (ft)	Design Radius (in)	Effective Radius (in)	Radius Reduction % > 6.00%
690.5	24.0	27.1	
689.5	24.0	27.0	
688.5	24.0	26.8	
687.5	24.0	26.8	
686.5	24.0	26.9	
685.5	24.0	27.2	
684.5	24.0	27.0	
683.5	24.0	27.0	
682.5	24.0	26.9	
681.5	24.0	26.8	
680.5	24.0	26.9	
679.5	24.0	26.9	
678.5	24.0	26.8	
677.5	24.0	27.2	
676.5	24.0	27.4	
675.5	24.0	27.5	
674.5	24.0	27.9	
673.5	24.0	27.9	
672.5	24.0	28.2	
671.5	24.0	28.1	
670.5	24.0	28.0	
669.5	24.0	27.8	
668.5	24.0	27.2	
667.5	24.0	26.8	
666.5	24.0	26.3	
665.5	24.0	26.4	
664.5	24.0	26.6	
663.5	24.0	26.6	
662.5	24.0	26.4	
661.5	24.0	25.8	
660.5	24.0	24.6	
659.5	24.0	23.9	
658.5	24.0	23.6	
657.5	24.0	22.9	

TIP-R Results - TOS/BOS Adjustments

Project: 195067-9 - Kokosing - OC3 Railroad TIP Phase 2
Shaft: DS-05
Timestamp: 12/05/20 03:51 (16h:43m)

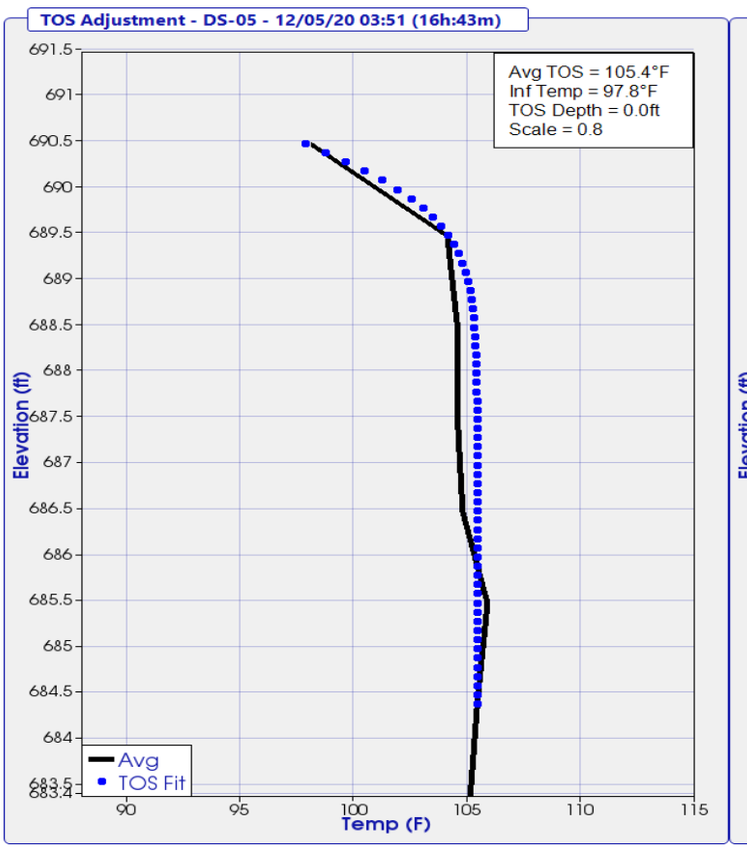

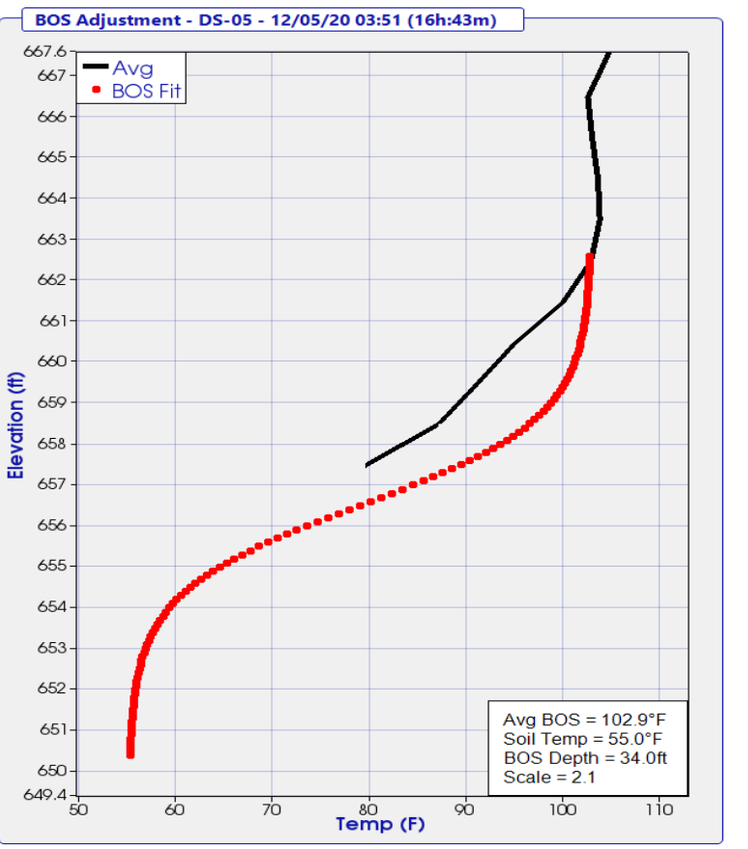

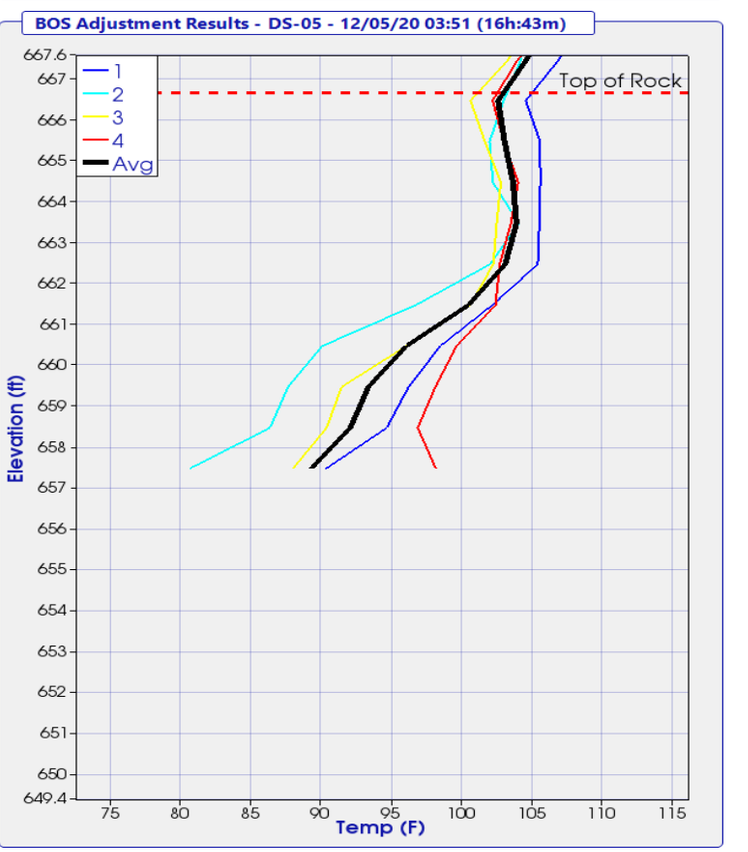

THERMAL FIELD LOG

Project: OC3
Pier No.: Fwd Abut
Date Placed: 12/4/2020
Shaft No.: 0505

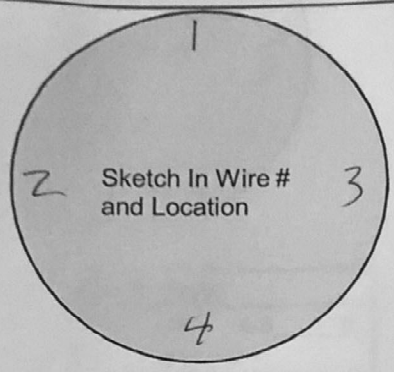

Wire #	Serial #	Wire Length (#nodes)	Nodes Above Concrete	Wire Tested After Install
1	18313	45	10	Yes
2	18222	↓	↓	↓
3	18175	↓	↓	↓
4	18266	↓	↓	↓

Designate Northerly wire as #1

Wire-Wire Distance		
1-3 ____ in.	2-3 ____ in.	4-3 ____ in.
2-1 ____ in.	4-1 ____ in.	

Shaft Information	Design	As-Built
Shaft Dia.	____ in.	50 in.
Shaft Length	____ ft.	34.25 ft.
Concrete Vol.	____ cy.	17 cy.
Cage Length	____ ft.	34 ft.
Cage Dia.	____ in.	____ in.
Casing Dia. (perm./temp.)	____ in.	____ in.
Casing Length	____ ft.	____ ft.
Rock Socket Dia.	____ in.	____ in.
Rock Socket Length	____ ft.	10.04 ft.

Elevation

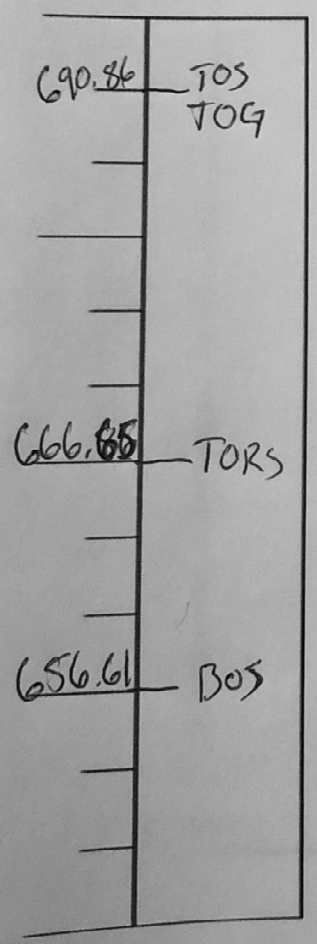

Field Notes:
Start of Placement -
End of Placement -
Placement Method -

Legend

TOC	Top of Casing	BOC	Bottom of Casing
TOG	Top of Ground	BORC	Bottom of Reinf. Cage
TOS	Top of Shaft	BOS	Bottom of Shaft
TORS	Top of Rock Socket	▼	Water Level

* indicate changes in diameter

Completed By: Adam [illegible]

Please Submit with Concrete Placement Log and Installation Record

4 Wire - Sh

TIP-R Results - Temperature Analysis Tools

Project: 195067-9 - Kokosing - OC3 Railroad TIP Phase 2
Shaft: DS-17
Timestamp: 12/17/20 02:43 (13h:56m)

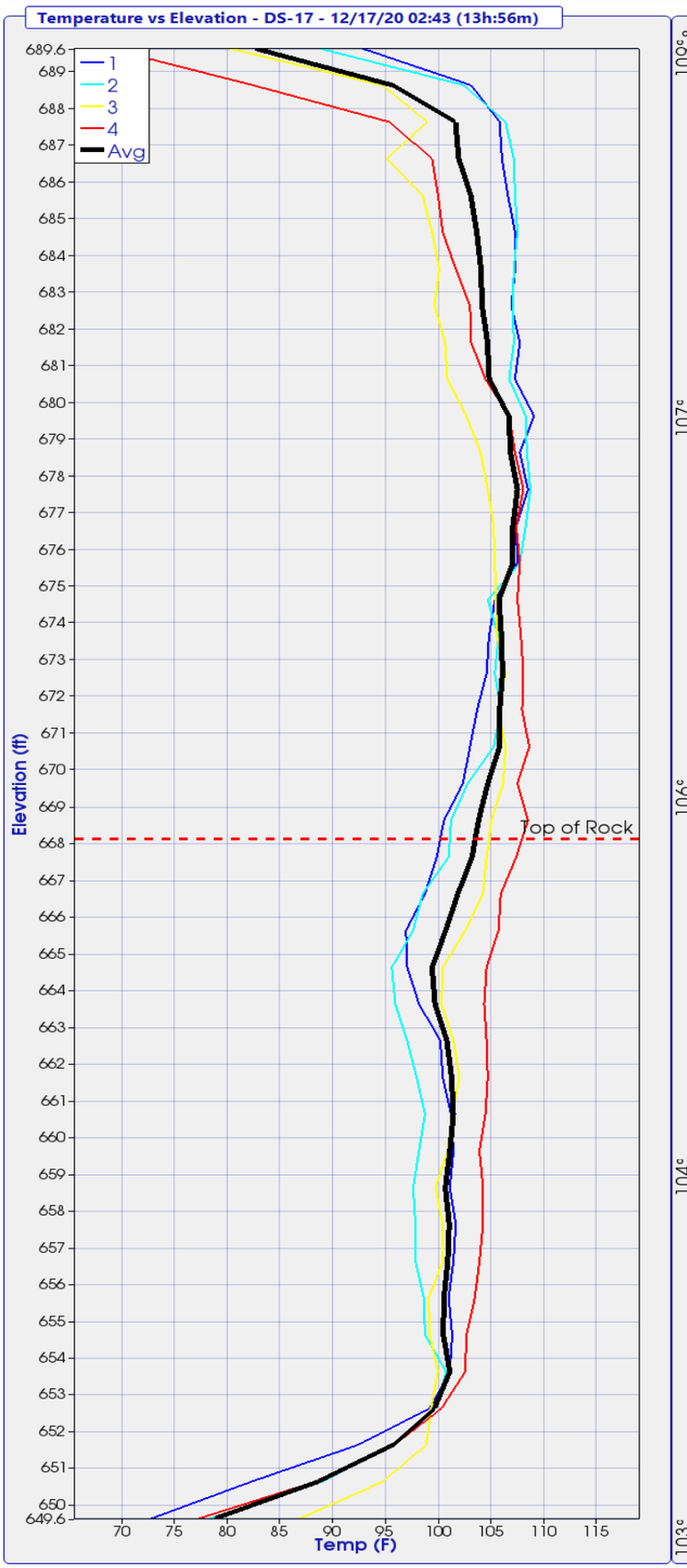

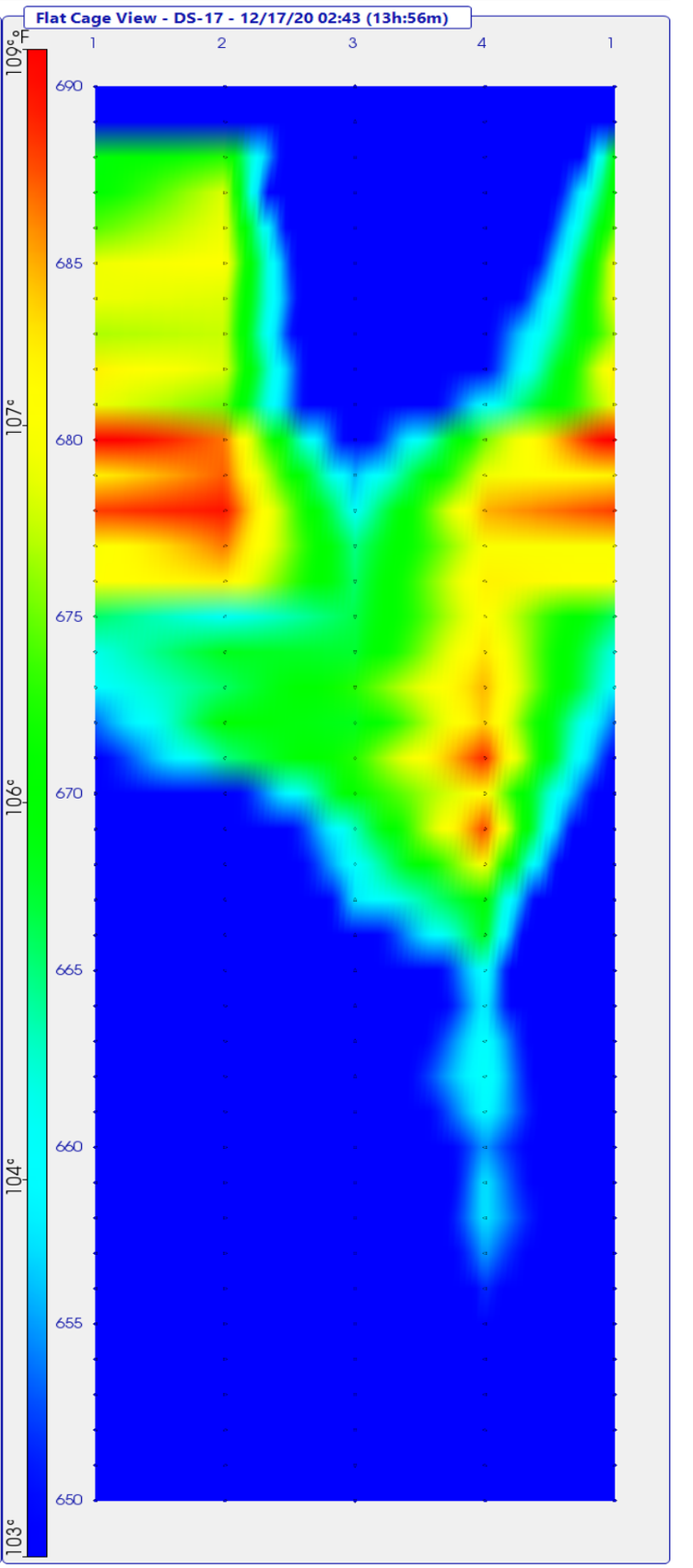

TIP-R Results - Radius Analysis Tools

Project: 195067-9 - Kokosing - OC3 Railroad TIP Phase 2
Shaft: DS-17
Timestamp: 12/17/20 02:43 (13h:56m)

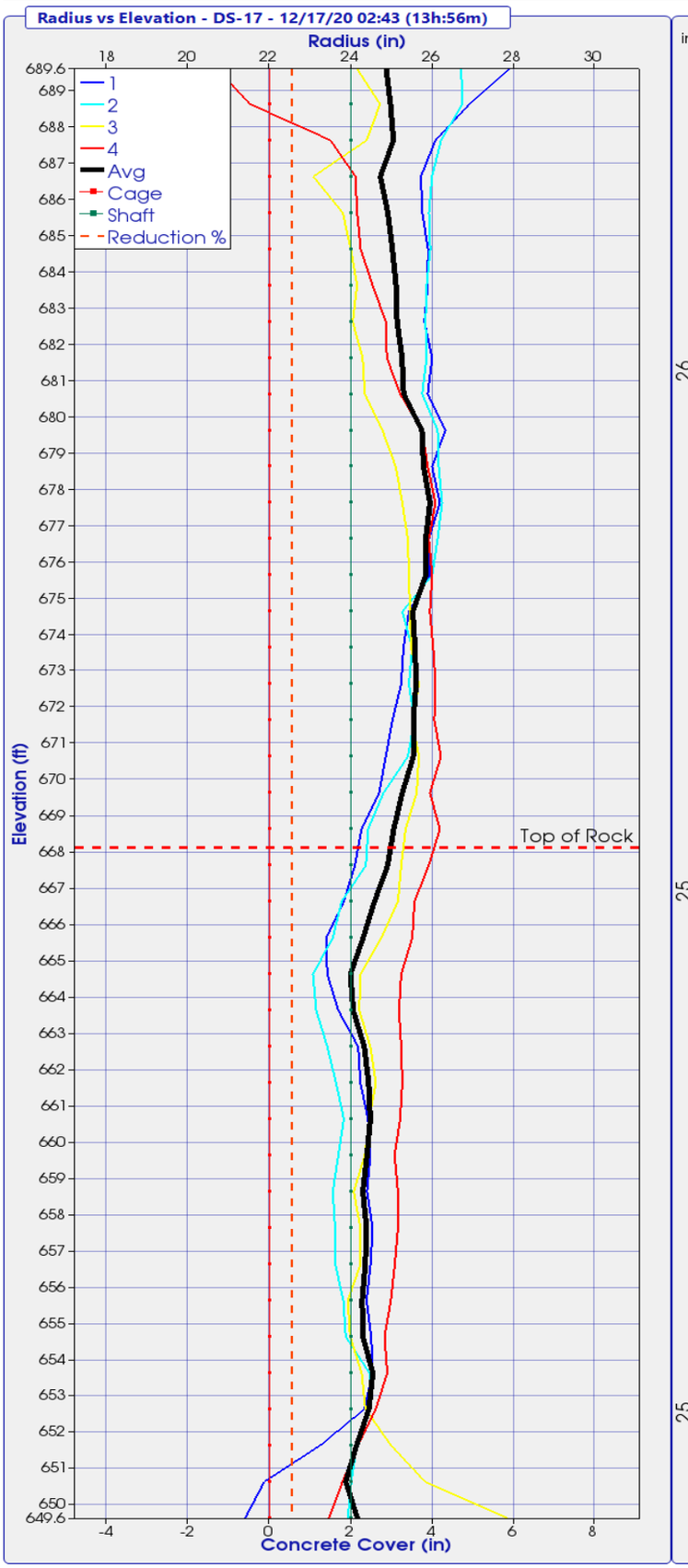

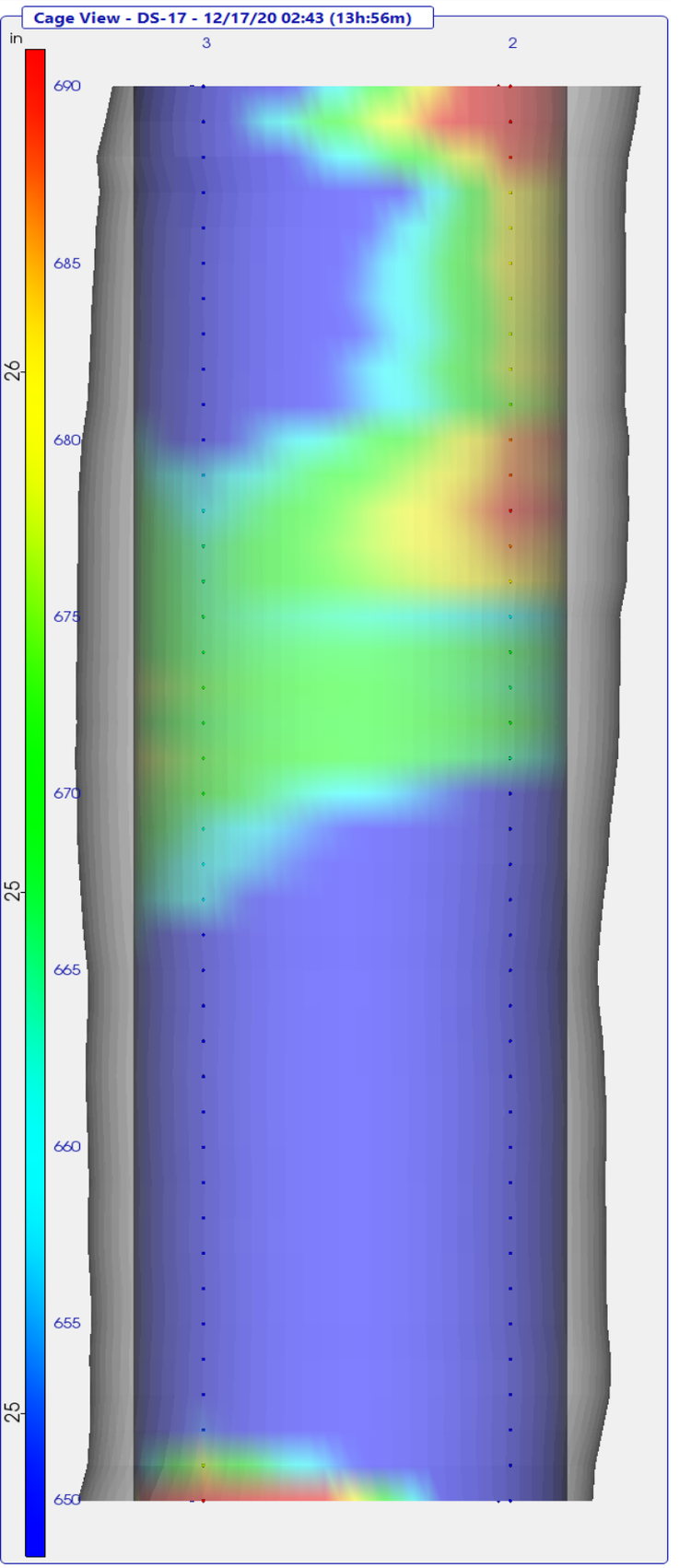

TIP-R Results - Radius Location Analysis

Project: 195067-9 - Kokosing - OC3 Railroad TIP Phase 2
Shaft: DS-17
Timestamp: 12/17/20 02:43 (13h:56m)

Adjustments Applied: Top (yes) Bottom (yes) Mid-Shaft (no)

Elevation (ft)	Wire 1 Radius (in)	Wire 2 Radius (in)	Wire 3 Radius (in)	Wire 4 Radius (in)	Effective Average Radius(in)
689.6	27.9	26.7	24.1	20.7	24.9
688.6	26.9	26.7	24.7	21.5	25.0
687.6	26.1	26.2	24.4	23.5	25.0
686.6	25.7	26.0	23.1	24.1	24.7
685.6	25.8	25.9	23.8	24.2	24.9
684.6	25.9	26.0	24.0	24.2	25.0
683.6	25.9	25.9	24.2	24.5	25.1
682.6	25.8	25.8	24.0	24.9	25.1
681.6	26.0	25.9	24.3	24.9	25.3
680.6	25.9	25.8	24.3	25.2	25.3
679.6	26.3	26.1	24.8	25.8	25.7
678.6	26.0	26.2	25.1	25.9	25.8
677.6	26.2	26.2	25.3	26.1	25.9
676.6	25.9	26.1	25.4	25.9	25.8
675.6	25.9	26.0	25.4	26.0	25.8
674.6	25.4	25.3	25.5	25.9	25.5
673.6	25.3	25.5	25.5	26.0	25.6
672.6	25.2	25.4	25.7	26.1	25.6
671.6	25.0	25.6	25.5	26.1	25.5
670.6	24.9	25.4	25.7	26.2	25.5
669.6	24.7	24.8	25.6	25.9	25.3
668.6	24.3	24.4	25.3	26.2	25.1
667.6	24.1	24.4	25.2	25.9	24.9
666.6	23.8	23.8	25.2	25.6	24.6
665.6	23.4	23.6	24.8	25.5	24.3
664.6	23.4	23.1	24.2	25.2	24.0
663.6	23.7	23.1	24.2	25.2	24.1
662.6	24.2	23.4	24.5	25.2	24.3
661.6	24.2	23.6	24.6	25.3	24.4
660.6	24.4	23.8	24.5	25.2	24.5
659.6	24.5	23.7	24.3	25.1	24.4
658.6	24.4	23.6	24.1	25.2	24.3
657.6	24.5	23.6	24.2	25.2	24.4
656.6	24.5	23.6	24.2	25.1	24.4
655.6	24.4	23.8	23.9	25.0	24.3
654.6	24.5	23.9	24.0	24.8	24.3
653.6	24.5	24.5	24.3	24.9	24.5
652.6	24.3	24.5	24.4	24.6	24.4
651.6	23.2	24.1	25.0	24.2	24.1
650.6	21.9	24.0	25.8	23.8	23.9
649.6	21.4	23.9	27.8	23.5	24.2

TIP-R Results - Radius Reduction Analysis

Project: 195067-9 - Kokosing - OC3 Railroad TIP Phase 2
Shaft: DS-17
Timestamp: 12/17/20 02:43 (13h:56m)

Adjustments Applied: Top (yes) Bottom (yes) Mid-Shaft (no)

Elevation (ft)	Design Radius (in)	Effective Radius (in)	Radius Reduction % > 6.00%
689.6	24.0	24.9	
688.6	24.0	25.0	
687.6	24.0	25.0	
686.6	24.0	24.7	
685.6	24.0	24.9	
684.6	24.0	25.0	
683.6	24.0	25.1	
682.6	24.0	25.1	
681.6	24.0	25.3	
680.6	24.0	25.3	
679.6	24.0	25.7	
678.6	24.0	25.8	
677.6	24.0	25.9	
676.6	24.0	25.8	
675.6	24.0	25.8	
674.6	24.0	25.5	
673.6	24.0	25.6	
672.6	24.0	25.6	
671.6	24.0	25.5	
670.6	24.0	25.5	
669.6	24.0	25.3	
668.6	24.0	25.1	
667.6	24.0	24.9	
666.6	24.0	24.6	
665.6	24.0	24.3	
664.6	24.0	24.0	
663.6	24.0	24.1	
662.6	24.0	24.3	
661.6	24.0	24.4	
660.6	24.0	24.5	
659.6	24.0	24.4	
658.6	24.0	24.3	
657.6	24.0	24.4	
656.6	24.0	24.4	
655.6	24.0	24.3	
654.6	24.0	24.3	
653.6	24.0	24.5	
652.6	24.0	24.4	
651.6	24.0	24.1	
650.6	24.0	23.9	
649.6	24.0	24.2	

TIP-R Results - TOS/BOS Adjustments

Project: 195067-9 - Kokosing - OC3 Railroad TIP Phase 2
Shaft: DS-17
Timestamp: 12/17/20 02:43 (13h:56m)

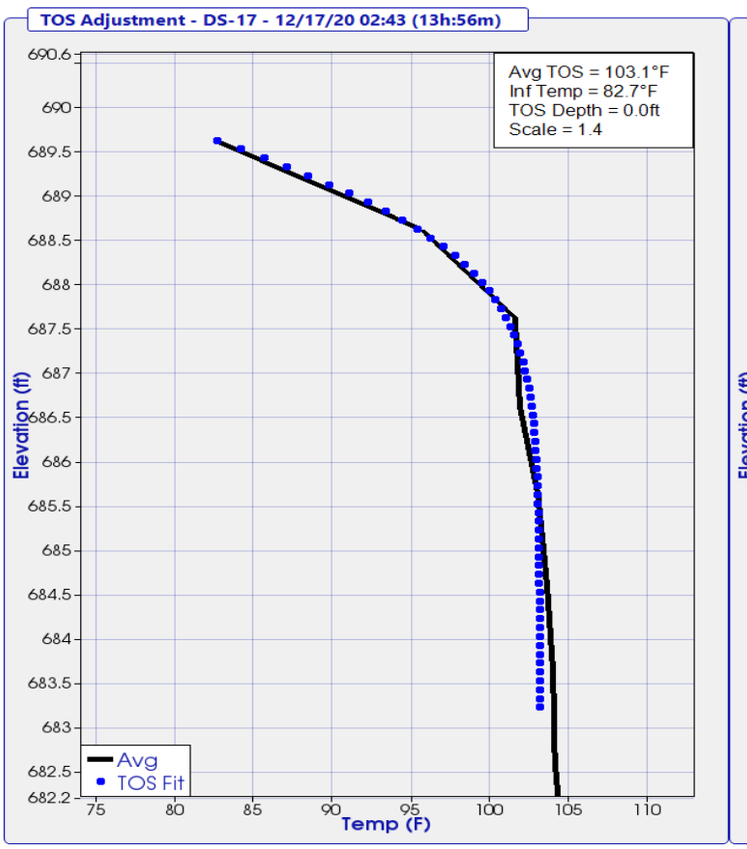

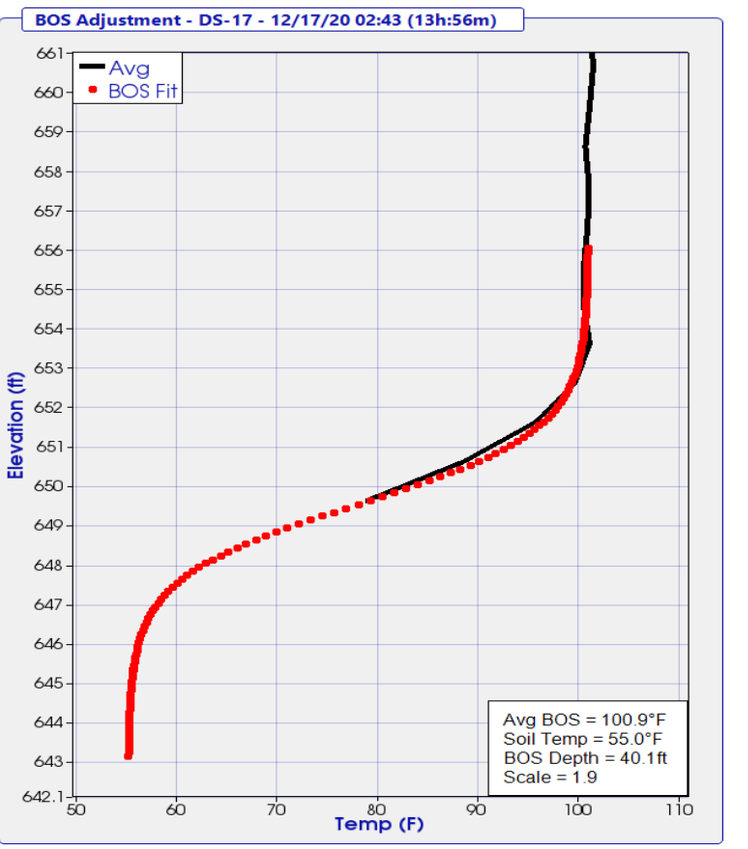

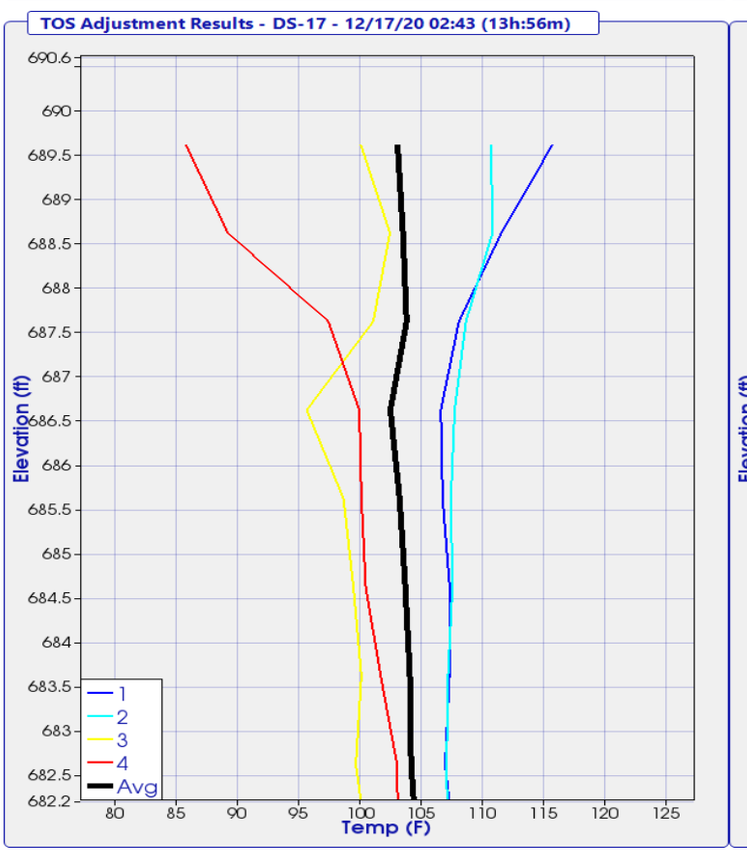

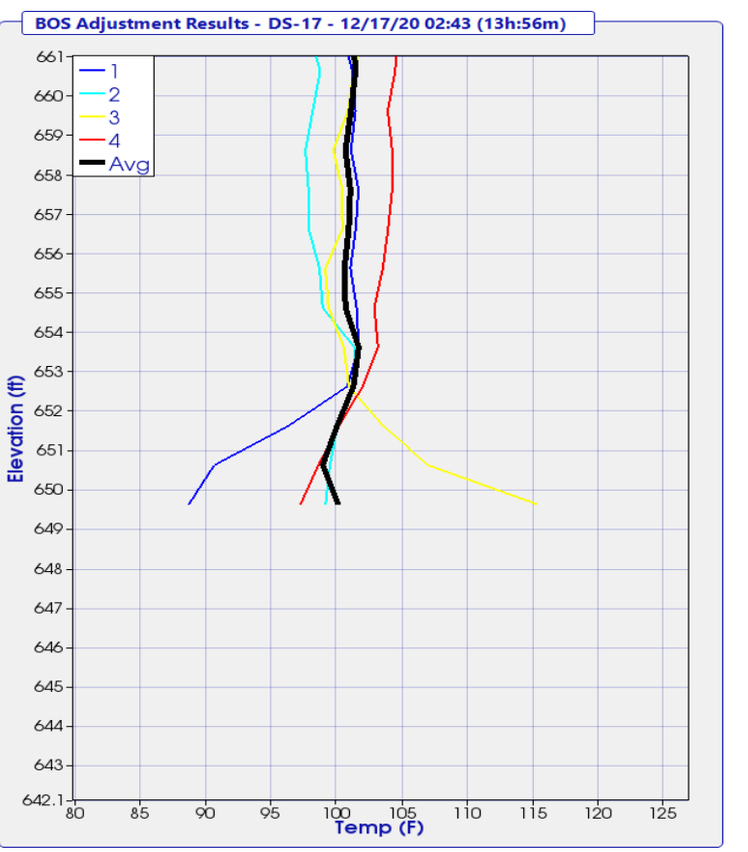

THERMAL FIELD LOG

Project: OC3
Pier No.: Pier 1
Date Placed: 12/16/2020
Shaft No.: 0517

N

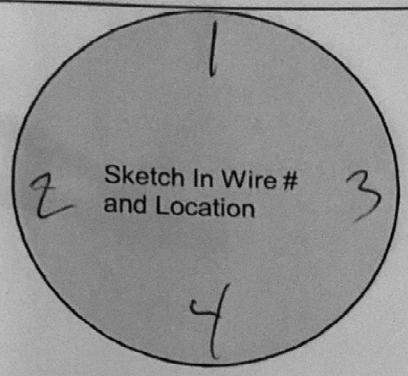

Wire #	Serial #	Wire Length (#nodes)	Nodes Above Concrete	Wire Tested After Install
1	58237	45		Yes
2	58232	↓		↓
3	58230			
4	58231			

Designate Northerly wire as #1

Wire-Wire Distance		
1-3 ____ in.	2-3 ____ in.	4-3 ____ in.
2-1 ____ in.	4-1 ____ in.	

Shaft Information	Design	As-Built
Shaft Dia.	____ in.	48 in.
Shaft Length	____ ft.	40.12 ft.
Concrete Vol.	____ cy.	20 cy.
Cage Length	____ ft.	39.75 ~~40.12~~ ft.
Cage Dia.	____ in.	____ in.
Casing Dia. (perm./temp.)	____ in.	____ in.
Casing Length	____ ft.	____ ft.
Rock Socket Dia.	____ in.	____ in.
Rock Socket Length	____ ft.	18.6 ft.

Elevation

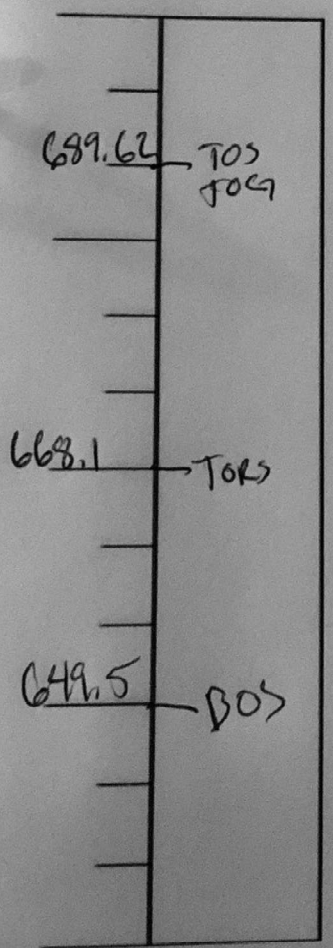

*** indicate changes in diameter**

Field Notes:

Start of Placement -

End of Placement -

Placement Method -

Legend

TOC	Top of Casing	BOC	Bottom of Casing
TOG	Top of Ground	BORC	Bottom of Reinf. Cage
TOS	Top of Shaft	BOS	Bottom of Shaft
TORS	Top of Rock Socket	▼	Water Level

Completed By: [signature]

Please Submit with Concrete Placement Log and Installation Record

4 Wire - Shaf

TIP-R Results - Temperature Analysis Tools

Project: 195067-9 - Kokosing - OC3 Railroad TIP Phase 2
Shaft: DS-18
Timestamp: 12/16/20 08:50 (20h:1m)

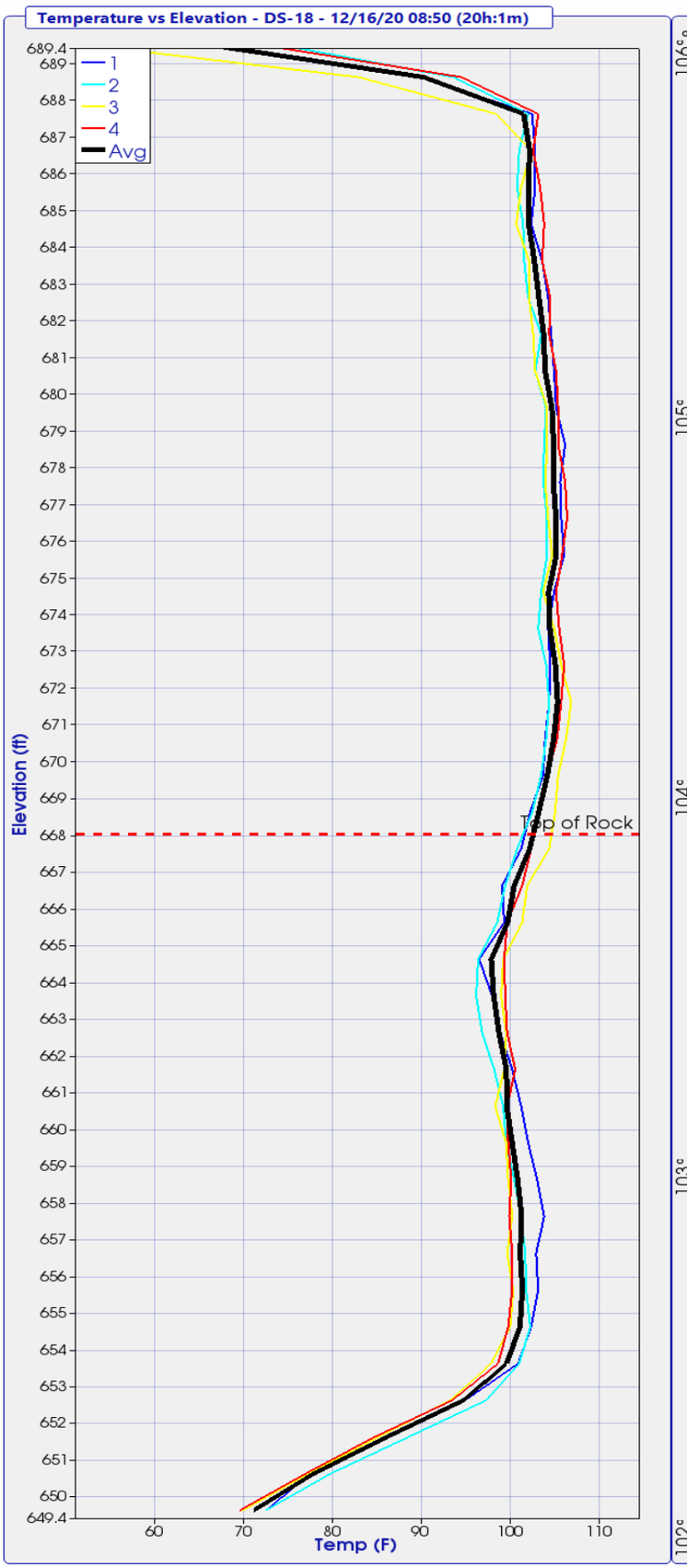

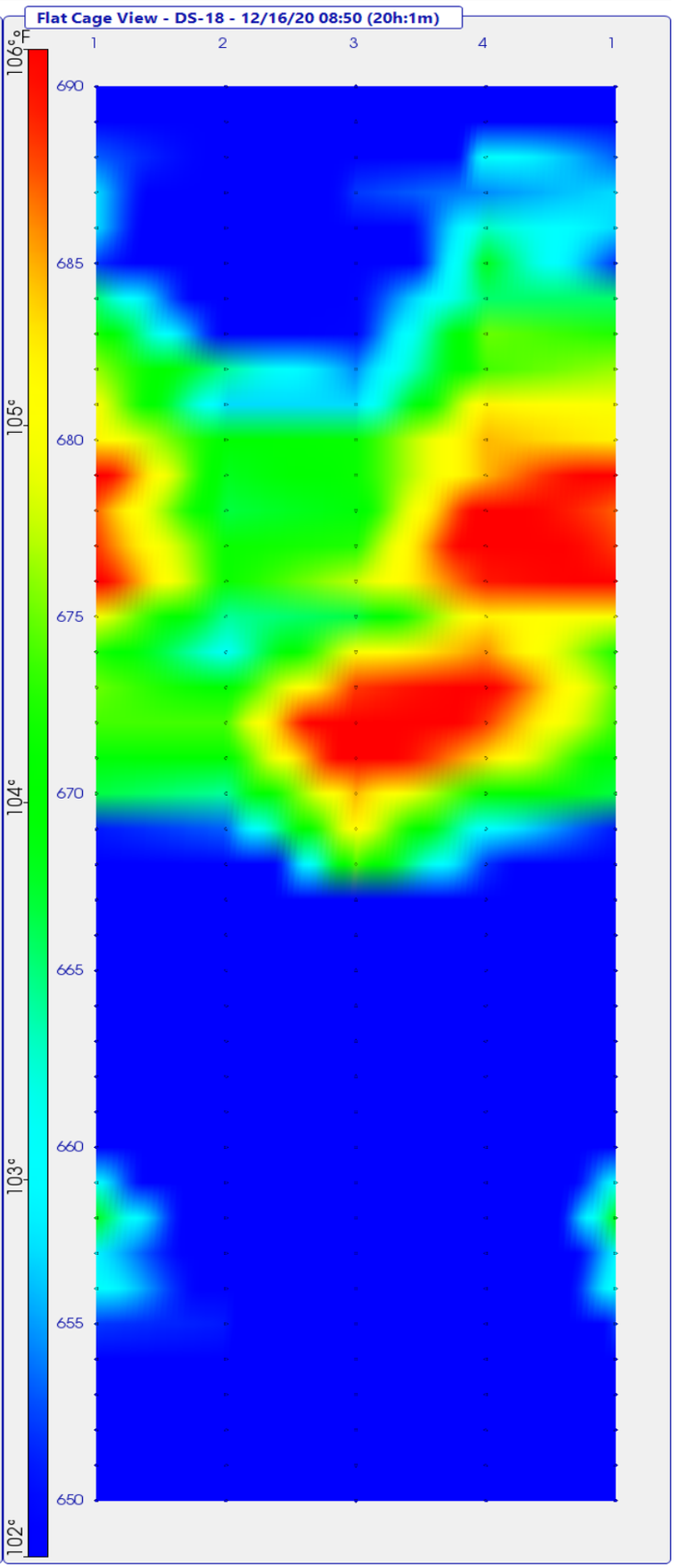

TIP-R Results - Radius Analysis Tools

Project: 195067-9 - Kokosing - OC3 Railroad TIP Phase 2
Shaft: DS-18
Timestamp: 12/16/20 08:50 (20h:1m)

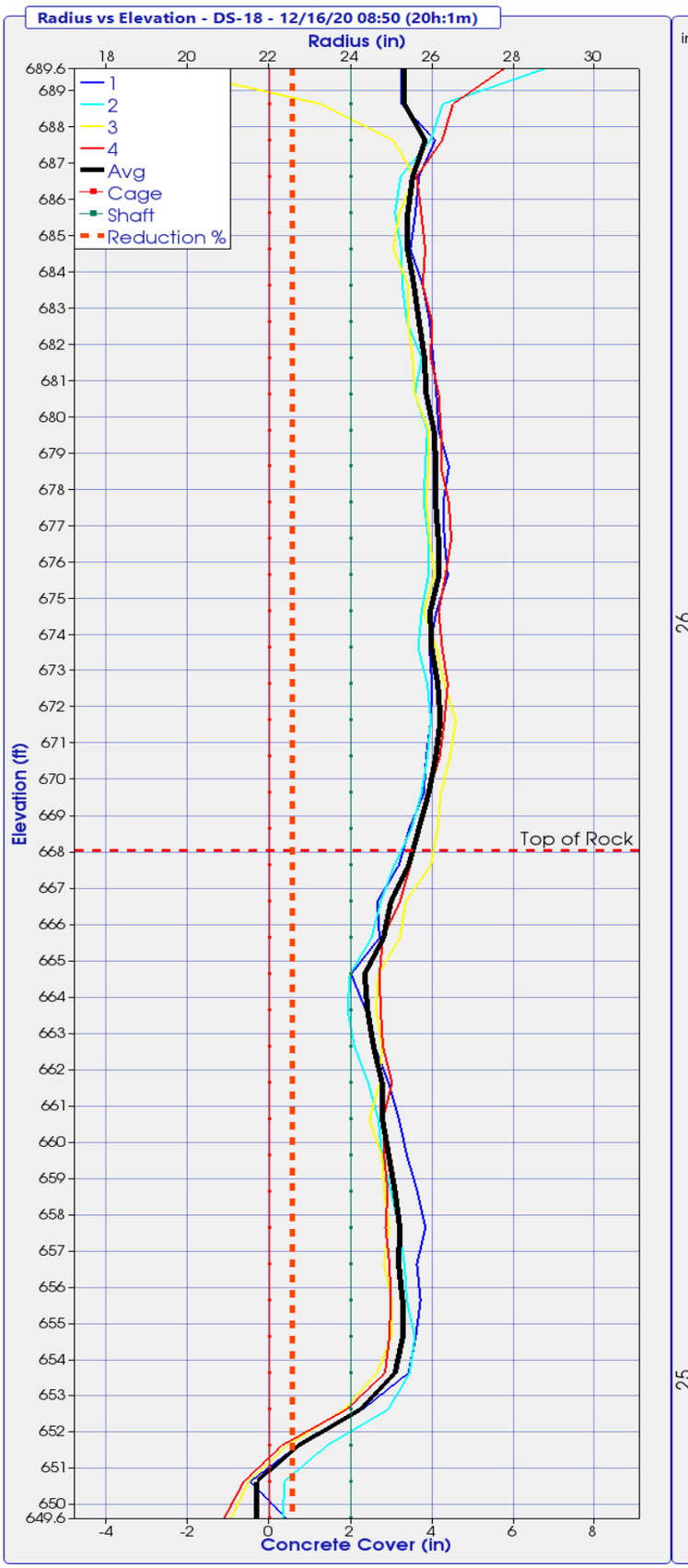

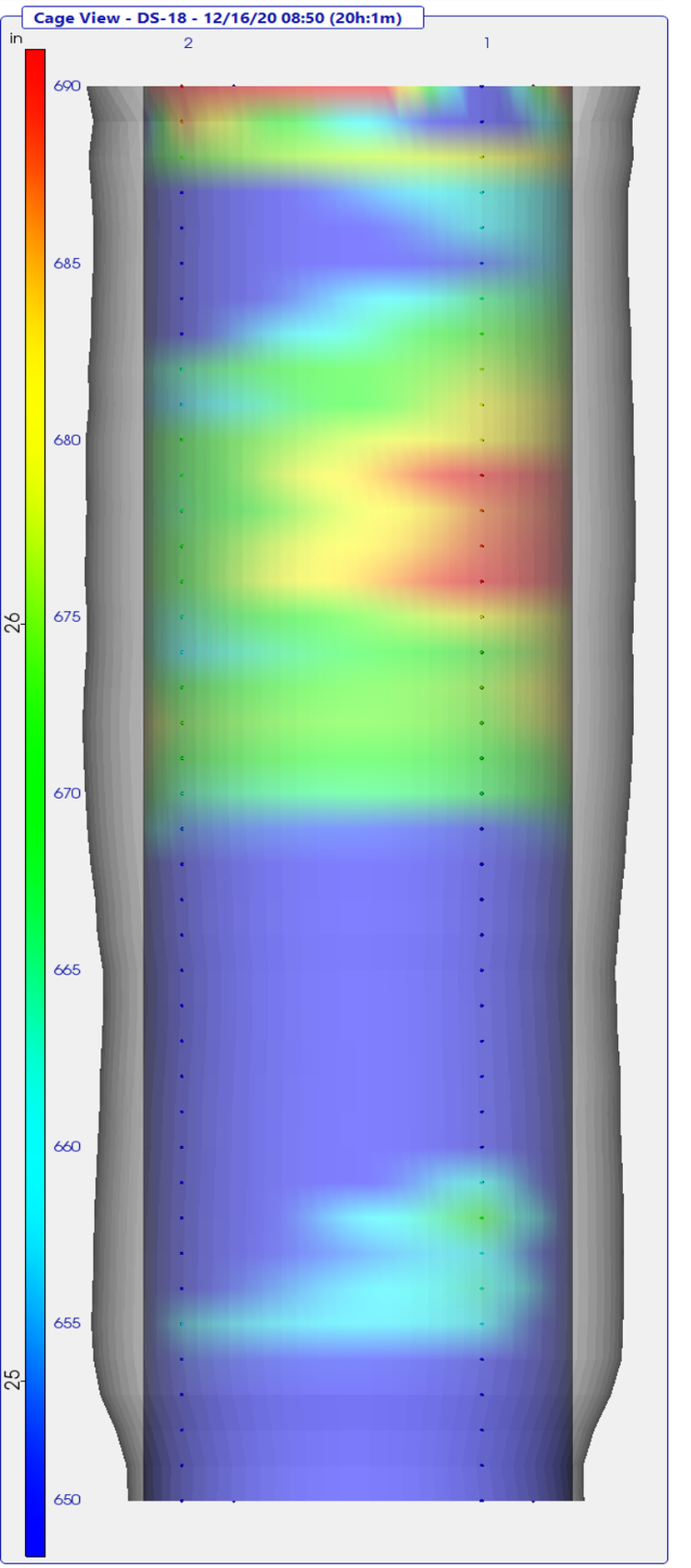

TIP-R Results - Temperature Analysis Tools

Project: 195067-9 - Kokosing - OC3 Railroad TIP Phase 2
Shaft: DS-18
Timestamp: 12/16/20 08:50 (20h:1m)

Pile Dynamics, Inc.

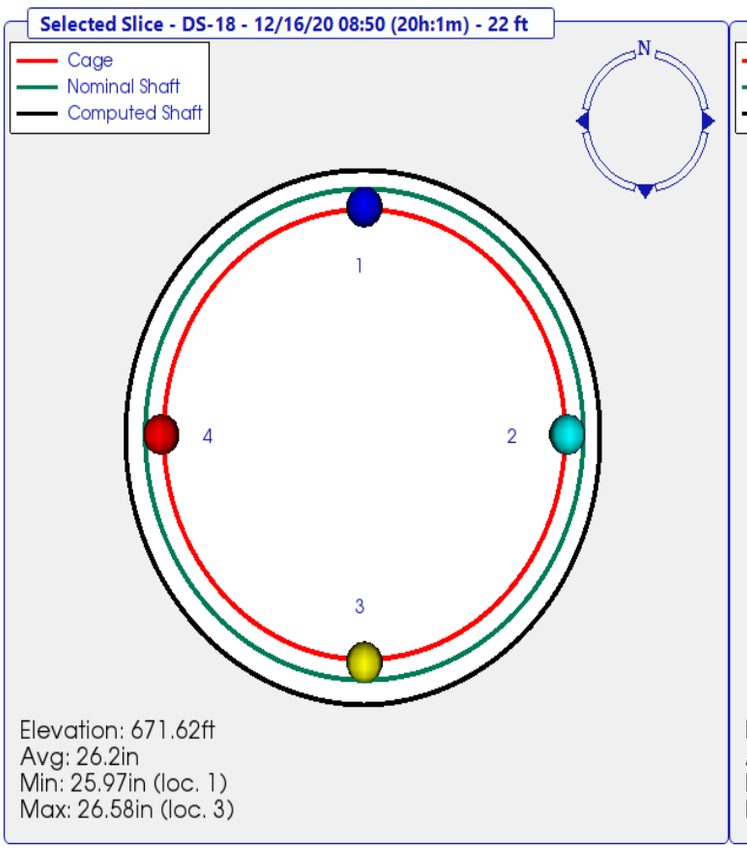

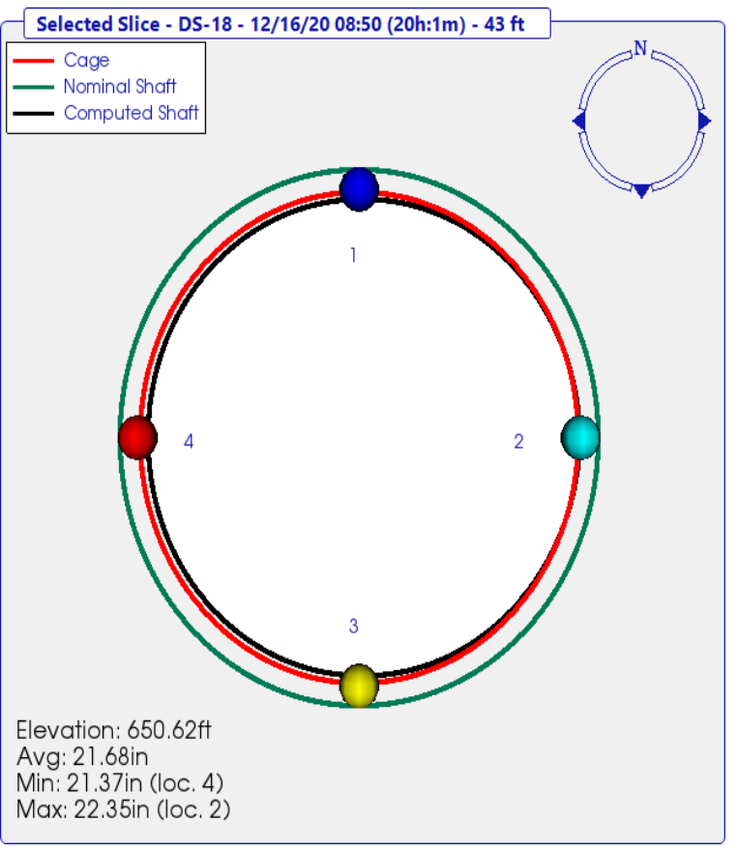

TIP-R Results - Radius Location Analysis

Project: 195067-9 - Kokosing - OC3 Railroad TIP Phase 2
Shaft: DS-18
Timestamp: 12/16/20 08:50 (20h:1m)

Adjustments Applied: Top (yes) Bottom (yes) Mid-Shaft (no)

Elevation (ft)	Wire 1 Radius (in)	Wire 2 Radius (in)	Wire 3 Radius (in)	Wire 4 Radius (in)	Effective Average Radius(in)
689.6	25.3	28.8	19.3	27.8	25.3
688.6	25.2	26.3	23.3	26.5	25.3
687.6	26.1	26.0	25.0	26.2	25.8
686.6	25.7	25.2	25.6	25.6	25.5
685.6	25.6	25.1	25.2	25.7	25.4
684.6	25.5	25.2	25.0	25.8	25.4
683.6	25.8	25.3	25.4	25.8	25.6
682.6	25.9	25.4	25.4	26.0	25.7
681.6	26.0	25.7	25.5	26.0	25.8
680.6	26.1	25.6	25.6	26.2	25.9
679.6	26.2	25.9	25.9	26.2	26.0
678.6	26.4	25.8	25.9	26.2	26.1
677.6	26.3	25.8	25.9	26.4	26.1
676.6	26.3	25.9	25.9	26.5	26.2
675.6	26.4	25.9	26.0	26.3	26.2
674.6	26.1	25.7	25.8	26.2	26.0
673.6	25.9	25.7	26.1	26.2	26.0
672.6	26.0	25.9	26.3	26.4	26.1
671.6	26.0	26.0	26.6	26.3	26.2
670.6	25.9	25.9	26.4	26.2	26.1
669.6	25.8	25.7	26.2	25.9	25.9
668.6	25.4	25.5	26.1	25.6	25.7
667.6	25.2	25.1	26.0	25.5	25.4
666.6	24.7	24.7	25.4	25.2	25.0
665.6	24.7	24.5	25.2	24.8	24.8
664.6	24.0	24.0	24.7	24.7	24.3
663.6	24.4	23.9	24.6	24.7	24.4
662.6	24.6	24.1	24.8	24.8	24.6
661.6	24.9	24.4	24.7	25.0	24.8
660.6	25.2	24.7	24.5	24.8	24.8
659.6	25.4	24.8	24.8	24.8	24.9
658.6	25.6	25.0	24.8	24.9	25.1
657.6	25.8	25.2	24.9	24.9	25.2
656.6	25.6	25.3	24.8	25.0	25.2
655.6	25.7	25.4	25.0	25.0	25.3
654.6	25.6	25.6	25.0	24.9	25.3
653.6	25.4	25.4	24.6	24.8	25.1
652.6	24.3	24.9	23.8	23.9	24.2
651.6	22.7	23.4	22.4	22.3	22.7
650.6	21.5	22.4	21.5	21.4	21.7
649.6	22.4	22.3	21.1	20.9	21.7

TIP-R Results - Radius Reduction Analysis

Project: 195067-9 - Kokosing - OC3 Railroad TIP Phase 2
Shaft: DS-18
Timestamp: 12/16/20 08:50 (20h:1m)

Adjustments Applied: Top (yes) Bottom (yes) Mid-Shaft (no)

Elevation (ft)	Design Radius (in)	Effective Radius (in)	Radius Reduction % > 6.00%
689.6	24.0	25.3	
688.6	24.0	25.3	
687.6	24.0	25.8	
686.6	24.0	25.5	
685.6	24.0	25.4	
684.6	24.0	25.4	
683.6	24.0	25.6	
682.6	24.0	25.7	
681.6	24.0	25.8	
680.6	24.0	25.9	
679.6	24.0	26.0	
678.6	24.0	26.1	
677.6	24.0	26.1	
676.6	24.0	26.2	
675.6	24.0	26.2	
674.6	24.0	26.0	
673.6	24.0	26.0	
672.6	24.0	26.1	
671.6	24.0	26.2	
670.6	24.0	26.1	
669.6	24.0	25.9	
668.6	24.0	25.7	
667.6	24.0	25.4	
666.6	24.0	25.0	
665.6	24.0	24.8	
664.6	24.0	24.3	
663.6	24.0	24.4	
662.6	24.0	24.6	
661.6	24.0	24.8	
660.6	24.0	24.8	
659.6	24.0	24.9	
658.6	24.0	25.1	
657.6	24.0	25.2	
656.6	24.0	25.2	
655.6	24.0	25.3	
654.6	24.0	25.3	
653.6	24.0	25.1	
652.6	24.0	24.2	
651.6	24.0	22.7	
650.6	24.0	21.7	9.7
649.6	24.0	21.7	9.7

TIP-R Results - TOS/BOS Adjustments

Project: 195067-9 - Kokosing - OC3 Railroad TIP Phase 2
Shaft: DS-18
Timestamp: 12/16/20 08:50 (20h:1m)

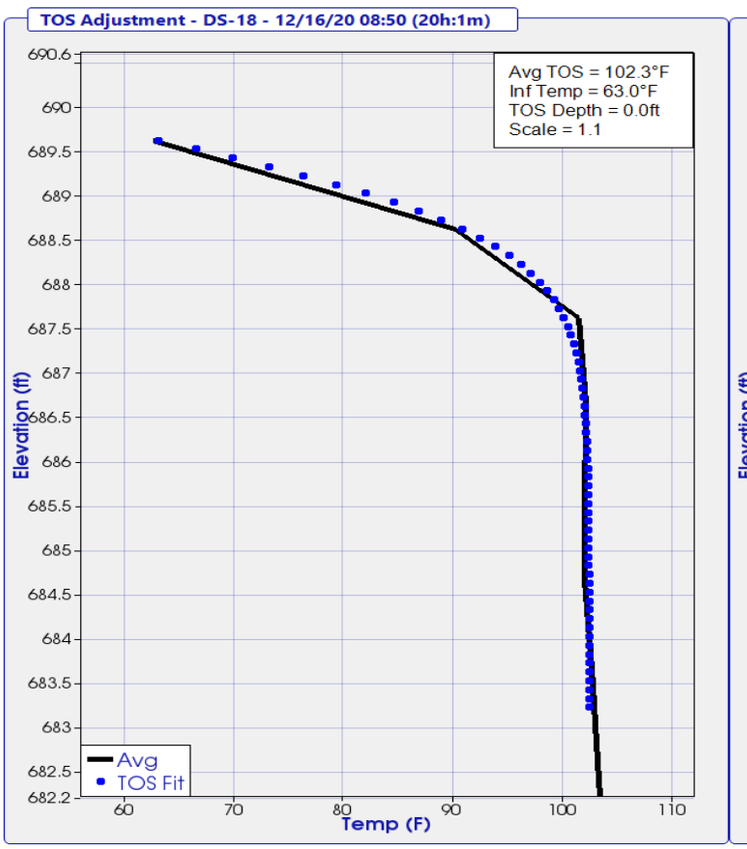

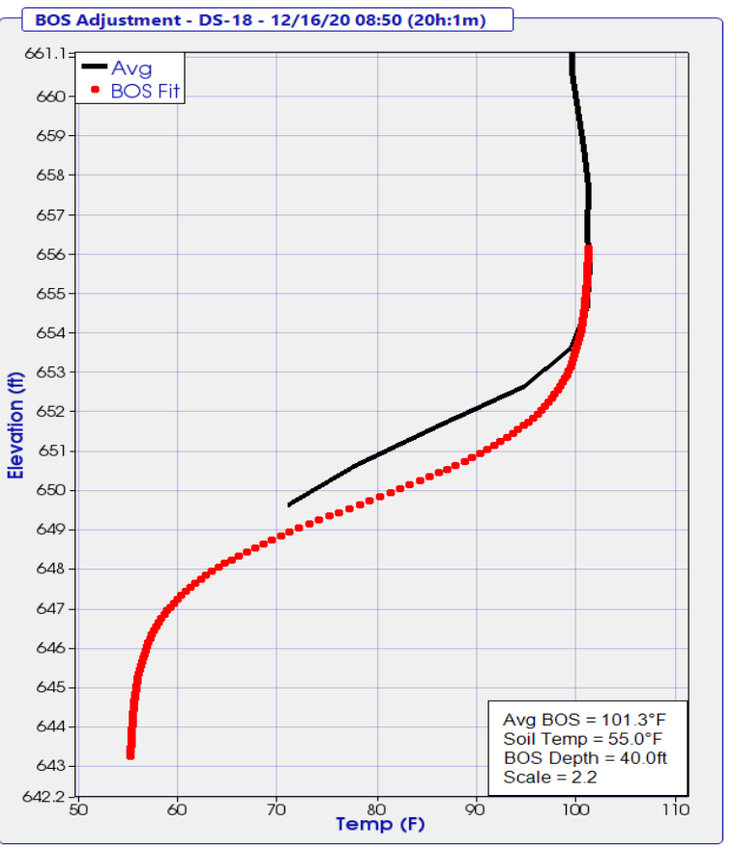

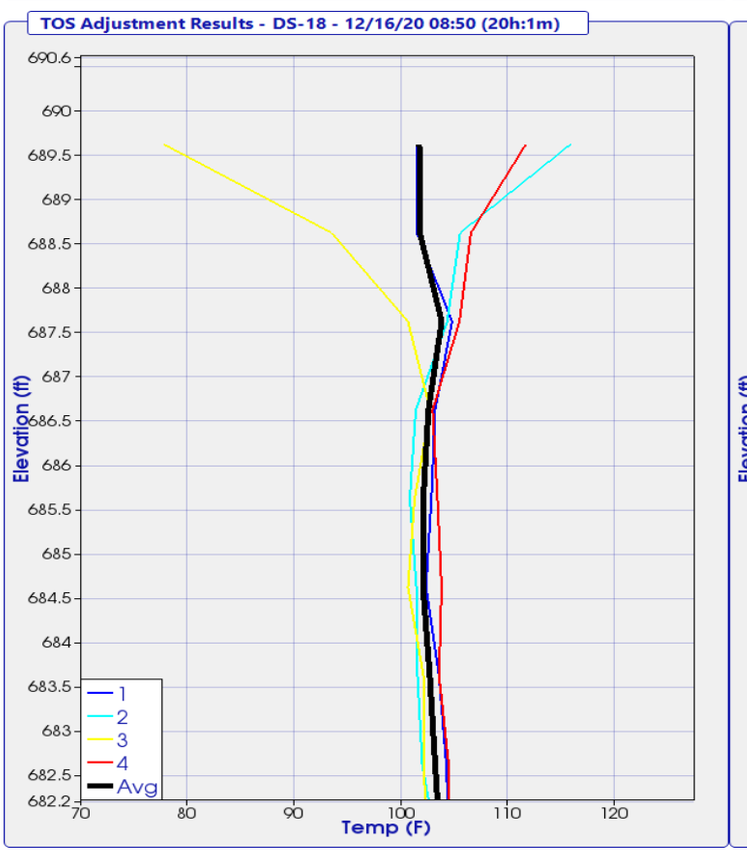

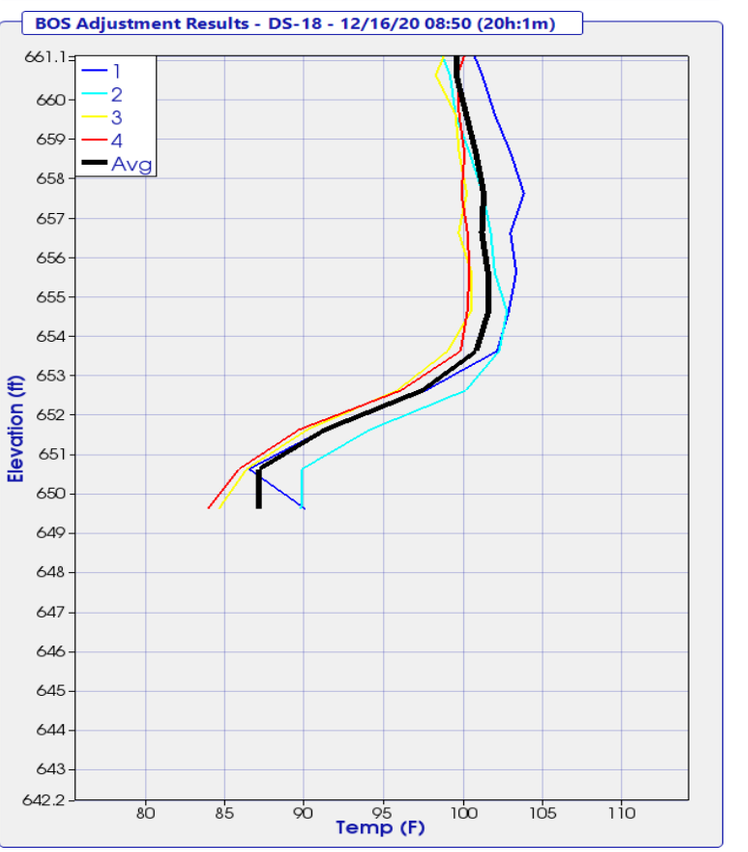

THERMAL FIELD LOG

Project 023
Pier No. Pier 1

Date Placed: 12/15/2020
Shaft No. DS18

N

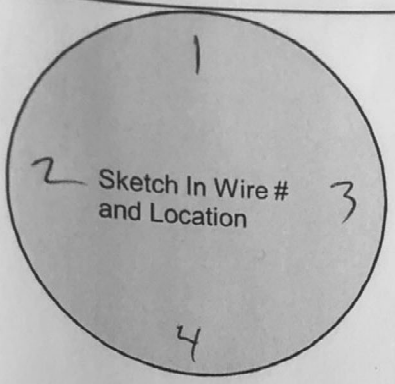

Wire #	Serial #	Wire Length (#nodes)	Nodes Above Concrete	Wire Tested After Install
1	57916	45		Yes
2	58229	↓		↓
3	57917			
4	58228			

Designate Northerly wire as #1

Wire-Wire Distance		
1-3 ____ in.	2-3 ____ in.	4-3 ____ in.
2-1 ____ in.	4-1 ____ in.	

Shaft Information	Design	As-Built
Shaft Dia.	____ in.	48 in.
Shaft Length	____ ft.	40 ft.
Concrete Vol.	____ cy.	20.5 cy.
Cage Length	____ ft.	39.75 ft.
Cage Dia.	____ in.	____ in.
Casing Dia. (perm./temp.)	____ in.	____ in.
Casing Length	____ ft.	____ ft.
Rock Socket Dia.	____ in.	____ in.
Rock Socket Length	____ ft.	18.4 ft.

Elevation

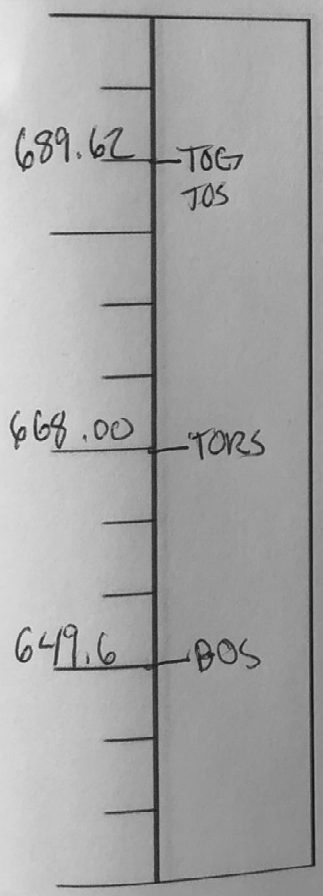

*** indicate changes in diameter**

Field Notes:
Start of Placement -
End of Placement -
Placement Method -

Legend

TOC	Top of Casing	BOC	Bottom of Casing
TOG	Top of Ground	BORC	Bottom of Reinf. Cage
TOS	Top of Shaft	BOS	Bottom of Shaft
TORS	Top of Rock Socket	▼	Water Level

Completed By: [signature]

Please Submit with Concrete Placement Log and Installation Record

4 Wire - Shaft

TIP-R Results - Temperature Analysis Tools

Project: 195067-9 - Kokosing - OC3 Railroad TIP Phase 2
Shaft: DS-23
Timestamp: 12/10/20 12:11 (18h:54m)

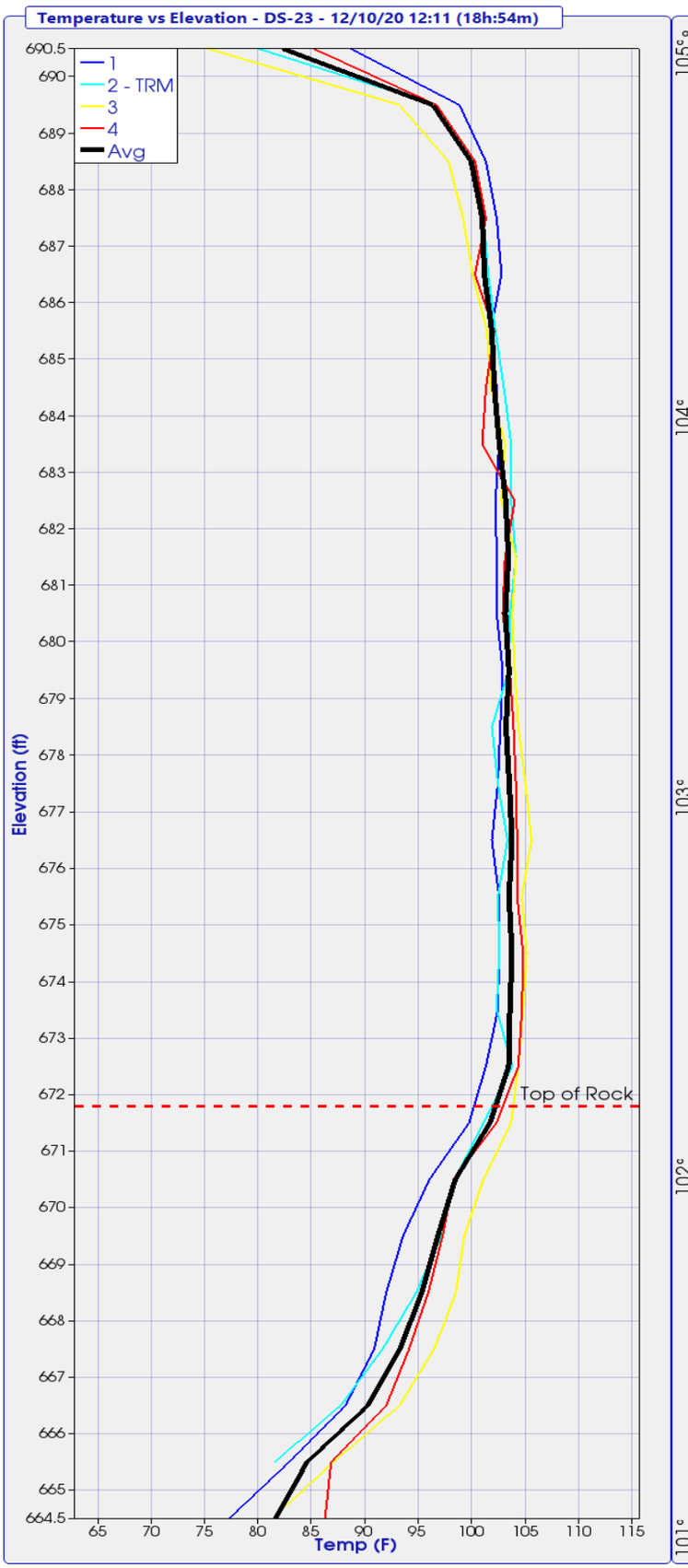

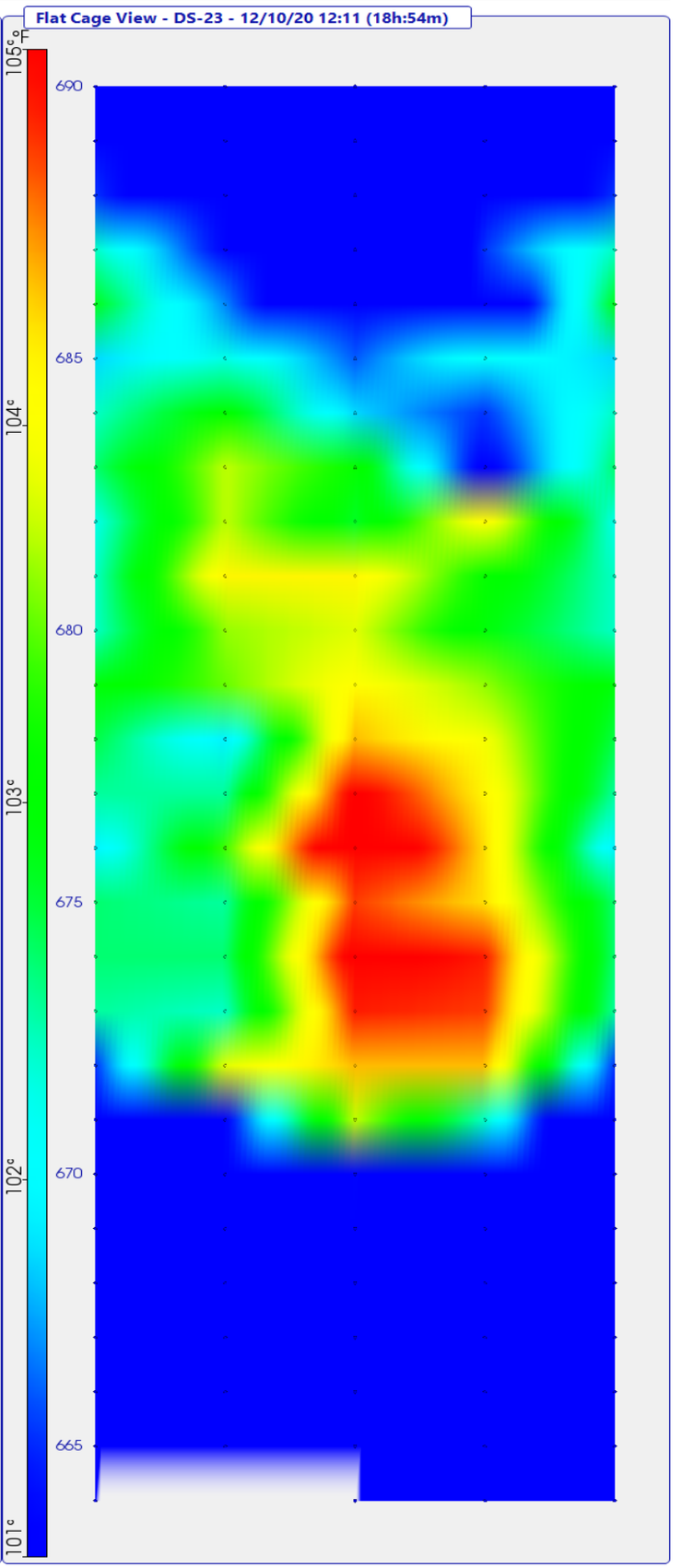

TIP-R Results - Radius Analysis Tools

Project: 195067-9 - Kokosing - OC3 Railroad TIP Phase 2
Shaft: DS-23
Timestamp: 12/10/20 12:11 (18h:54m)

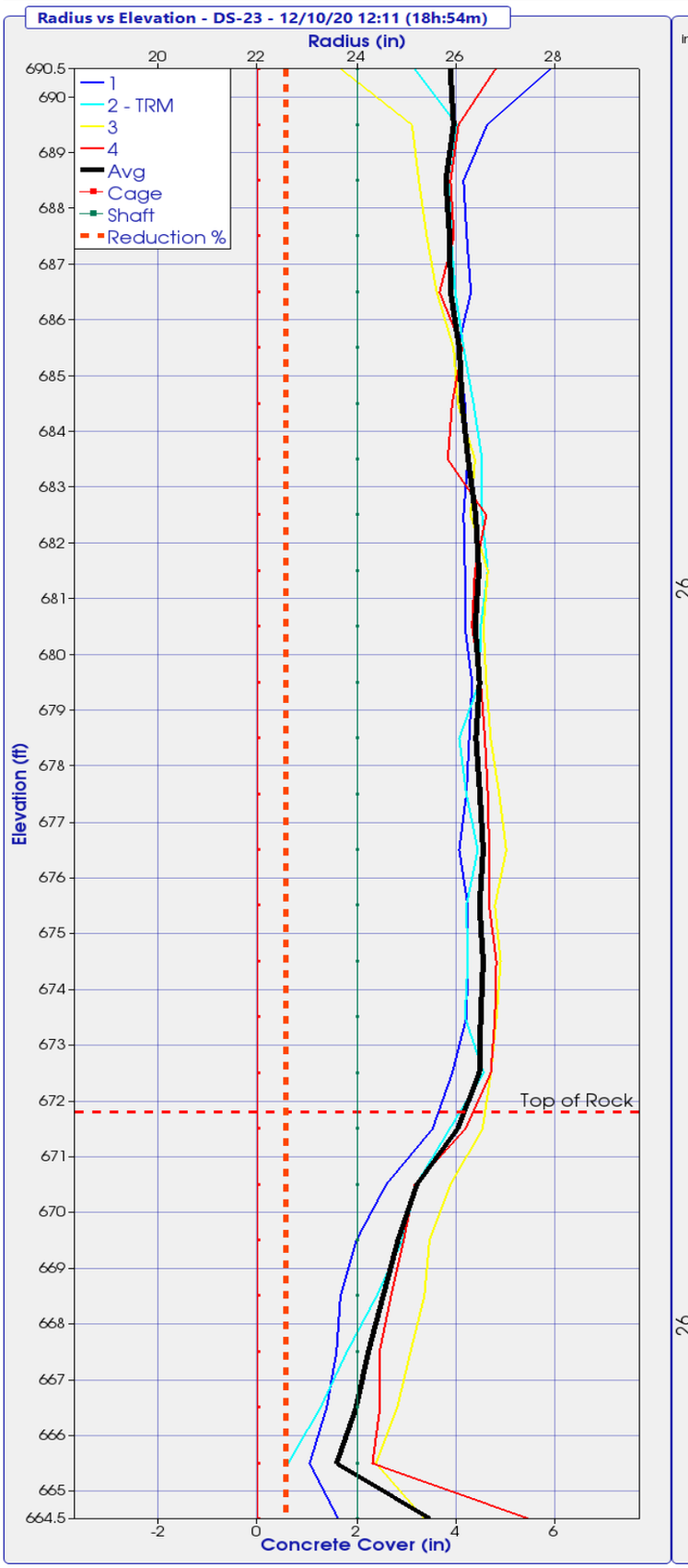

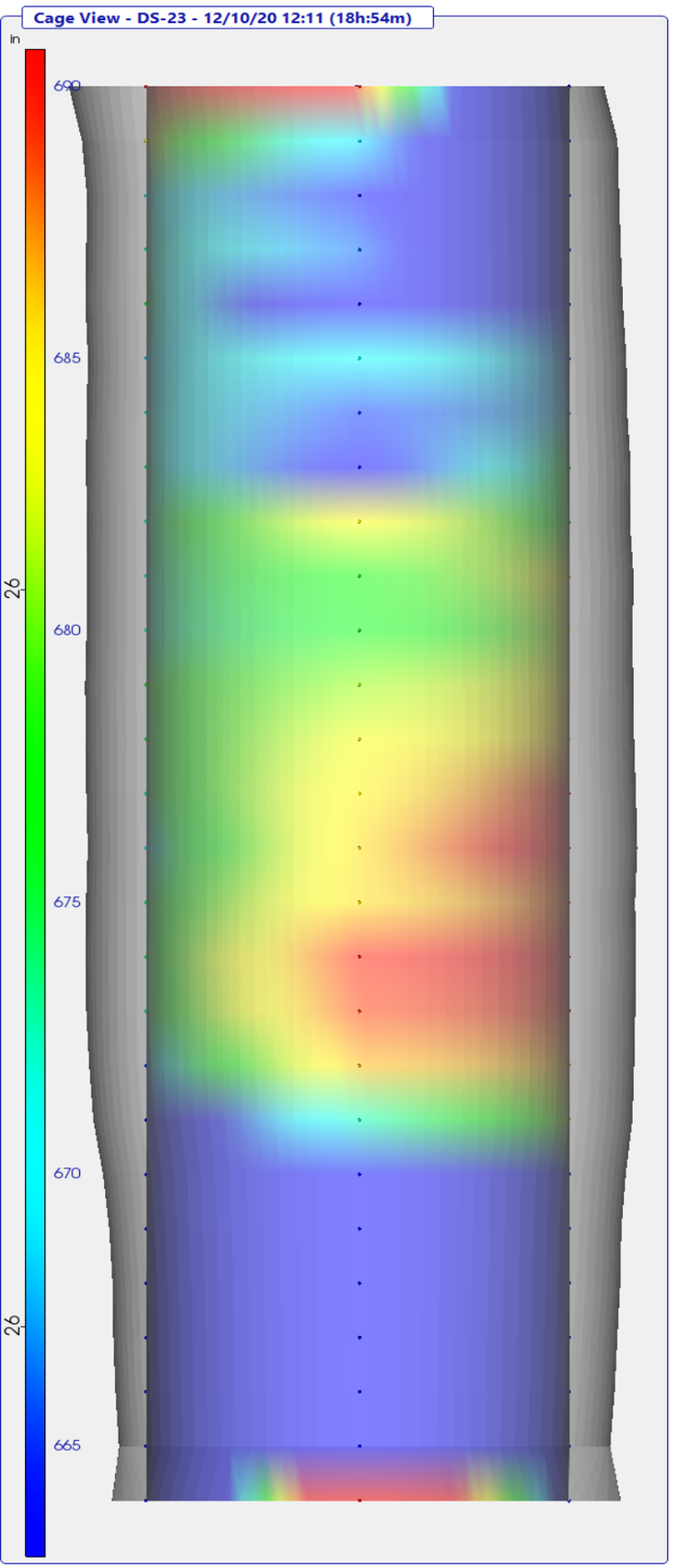

TIP-R Results - Radius Location Analysis

Project: 195067-9 - Kokosing - OC3 Railroad TIP Phase 2

Shaft: DS-23

Timestamp: 12/10/20 12:11 (18h:54m)

Adjustments Applied: Top (yes) Bottom (yes) Mid-Shaft (no)

Elevation (ft)	Wire 1 Radius (in)	Wire 2 Radius (in)	Wire 3 Radius (in)	Wire 4 Radius (in)	Effective Average Radius(in)
690.5	27.9	25.2	23.7	26.8	25.9
689.5	26.6	26.0	25.1	26.1	26.0
688.5	26.2	25.9	25.3	25.9	25.8
687.5	26.2	25.9	25.4	26.0	25.9
686.5	26.3	26.0	25.6	25.7	25.9
685.5	26.0	26.2	26.0	26.1	26.1
684.5	26.2	26.4	26.0	25.9	26.1
683.5	26.2	26.5	26.4	25.8	26.2
682.5	26.2	26.5	26.3	26.6	26.4
681.5	26.2	26.6	26.6	26.4	26.5
680.5	26.2	26.5	26.6	26.3	26.4
679.5	26.3	26.5	26.6	26.5	26.5
678.5	26.3	26.1	26.7	26.6	26.4
677.5	26.2	26.2	26.9	26.6	26.5
676.5	26.1	26.4	27.0	26.7	26.5
675.5	26.2	26.2	26.8	26.7	26.5
674.5	26.2	26.2	26.9	26.8	26.5
673.5	26.2	26.2	26.8	26.8	26.5
672.5	25.9	26.6	26.7	26.7	26.5
671.5	25.5	25.9	26.5	26.2	26.0
670.5	24.6	25.2	25.9	25.2	25.2
669.5	24.0	24.9	25.5	24.9	24.8
668.5	23.7	24.4	25.4	24.7	24.5
667.5	23.6	23.8	25.1	24.5	24.2
666.5	23.4	23.3	24.8	24.5	24.0
665.5	23.0	22.6	24.4	24.3	23.6
664.5	23.6		25.4	27.5	25.5

TIP-R Results - Radius Reduction Analysis

Project: 195067-9 - Kokosing - OC3 Railroad TIP Phase 2
Shaft: DS-23
Timestamp: 12/10/20 12:11 (18h:54m)

Adjustments Applied: Top (yes) Bottom (yes) Mid-Shaft (no)

Elevation (ft)	Design Radius (in)	Effective Radius (in)	Radius Reduction % > 6.00%
690.5	24.0	25.9	
689.5	24.0	26.0	
688.5	24.0	25.8	
687.5	24.0	25.9	
686.5	24.0	25.9	
685.5	24.0	26.1	
684.5	24.0	26.1	
683.5	24.0	26.2	
682.5	24.0	26.4	
681.5	24.0	26.5	
680.5	24.0	26.4	
679.5	24.0	26.5	
678.5	24.0	26.4	
677.5	24.0	26.5	
676.5	24.0	26.5	
675.5	24.0	26.5	
674.5	24.0	26.5	
673.5	24.0	26.5	
672.5	24.0	26.5	
671.5	24.0	26.0	
670.5	24.0	25.2	
669.5	24.0	24.8	
668.5	24.0	24.5	
667.5	24.0	24.2	
666.5	24.0	24.0	
665.5	24.0	23.6	
664.5	24.0	25.5	

TIP-R Results - TOS/BOS Adjustments

Project: 195067-9 - Kokosing - OC3 Railroad TIP Phase 2
Shaft: DS-23
Timestamp: 12/10/20 12:11 (18h:54m)

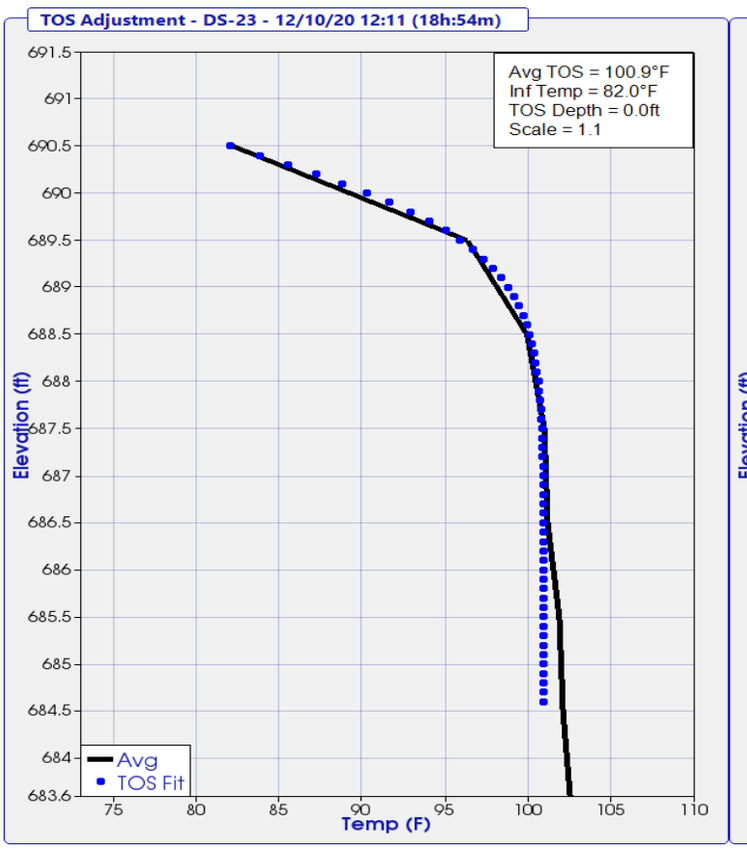

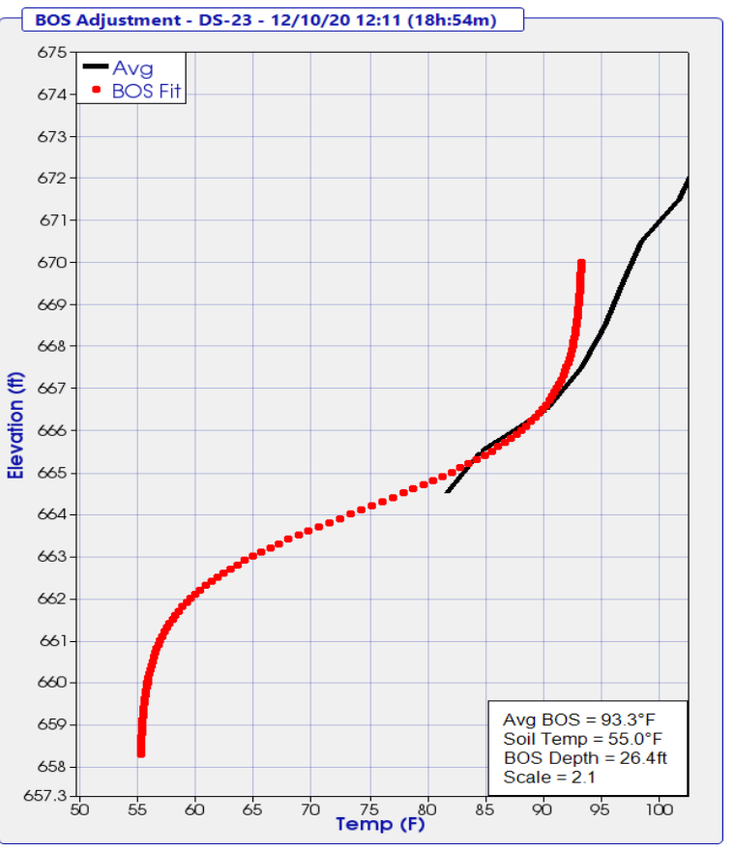

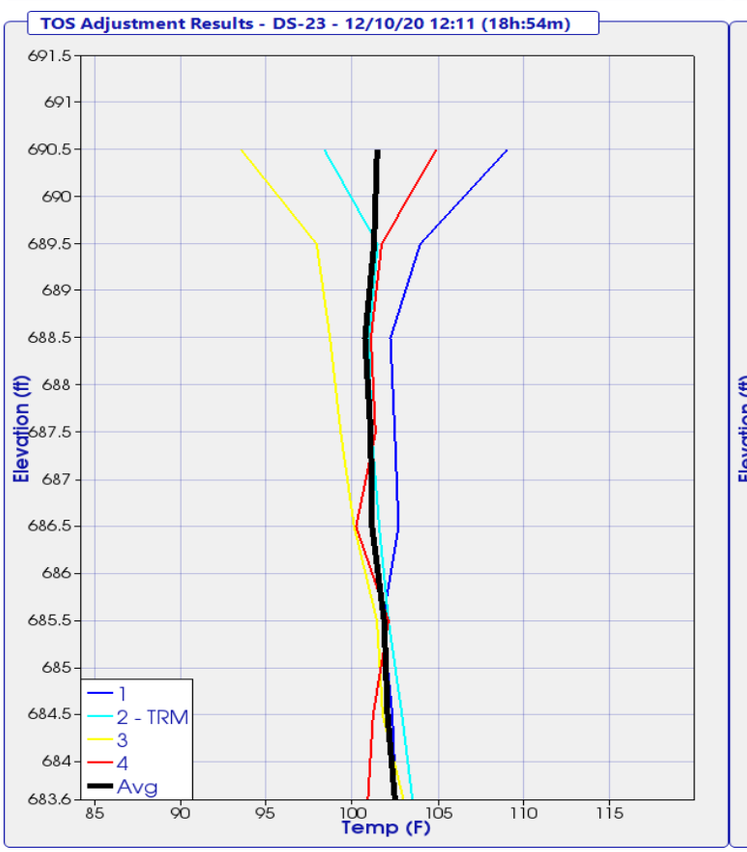

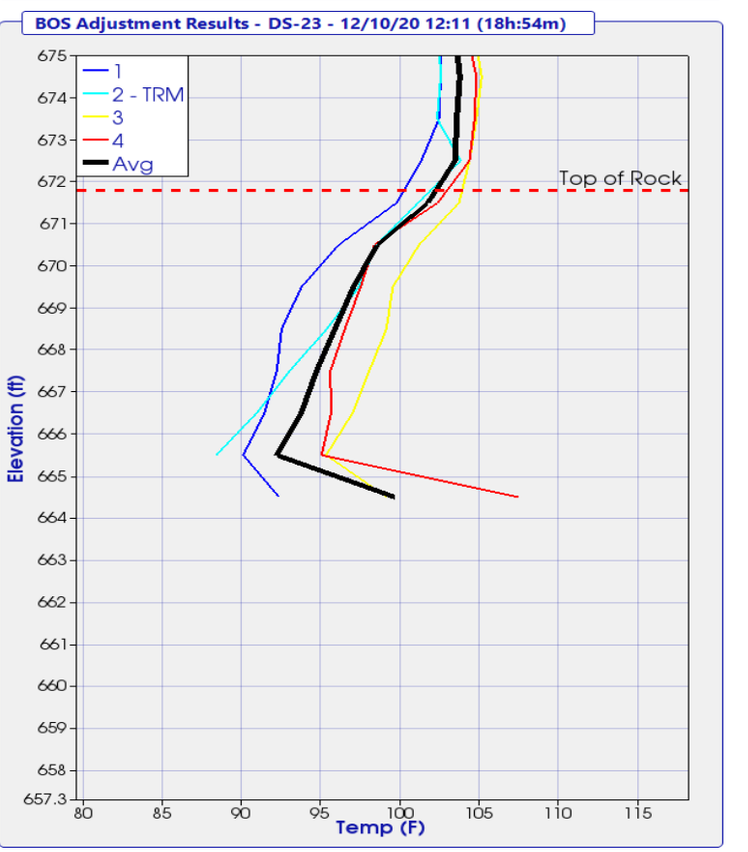

THERMAL FIELD LOG

Project: OC3
Pier No.: Rear Abut

Date Placed: 12/9/2020
Shaft No.: 0523

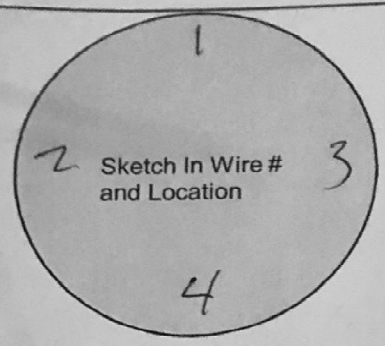

Wire #	Serial #	Wire Length (#nodes)	Nodes Above Concrete	Wire Tested After Install
1	14747	35		Yes
2	17590	↓		↓
3	17474	↓		↓
4	17728	↓		↓

Designate Northerly wire as #1

Wire-Wire Distance		
1-3 ____ in.	2-3 ____ in.	4-3 ____ in.
2-1 ____ in.	4-1 ____ in.	

Shaft Information	Design	As-Built
Shaft Dia.	____ in.	50 in.
Shaft Length	____ ft.	26.4 ft.
Concrete Vol.	____ cy.	14 cy.
Cage Length	____ ft.	26. ft.
Cage Dia.	____ in.	____ in.
Casing Dia. (perm./temp.)	____ in.	____ in.
Casing Length	____ ft.	____ ft.
Rock Socket Dia.	____ in.	____ in.
Rock Socket Length	____ ft.	7.69 ft.

Elevation

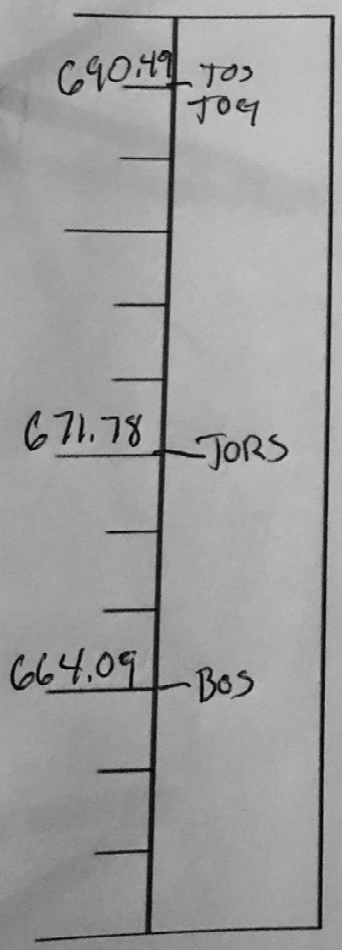

*** indicate changes in diameter**

Field Notes:

Start of Placement -

End of Placement -

Placement Method -

wire #1 the number was ~~illegible~~ illegible

Legend

TOC	Top of Casing	BOC	Bottom of Casing
TOG	Top of Ground	BORC	Bottom of Reinf. Cage
TOS	Top of Shaft	BOS	Bottom of Shaft
TORS	Top of Rock Socket	▼	Water Level

Completed By: [signature]

Please Submit with Concrete Placement Log and Installation Record

4 Wire -

TIP-R Results - Temperature Analysis Tools

Project: 195067-9 - Kokosing - OC3 Railroad TIP Phase 2
Shaft: DS-24
Timestamp: 12/15/20 09:56 (22h:10m)

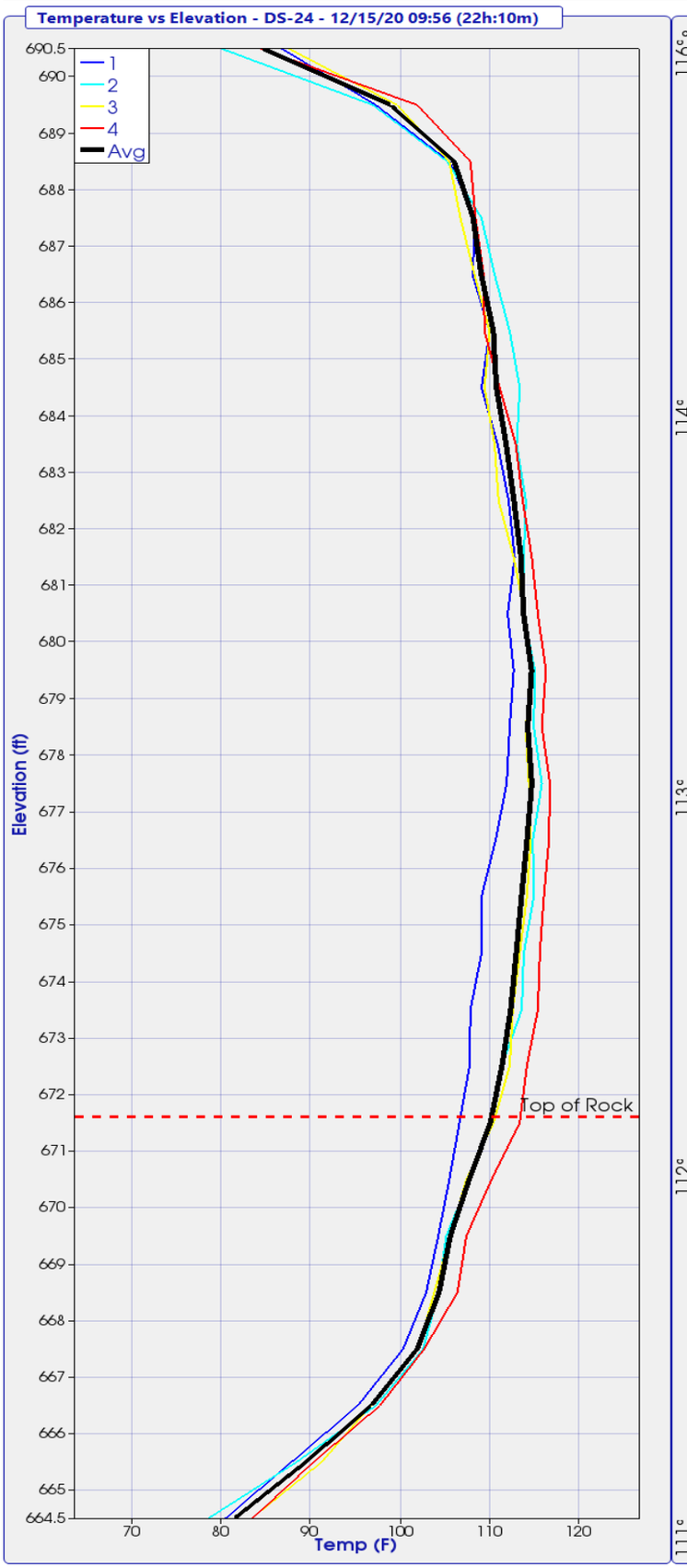

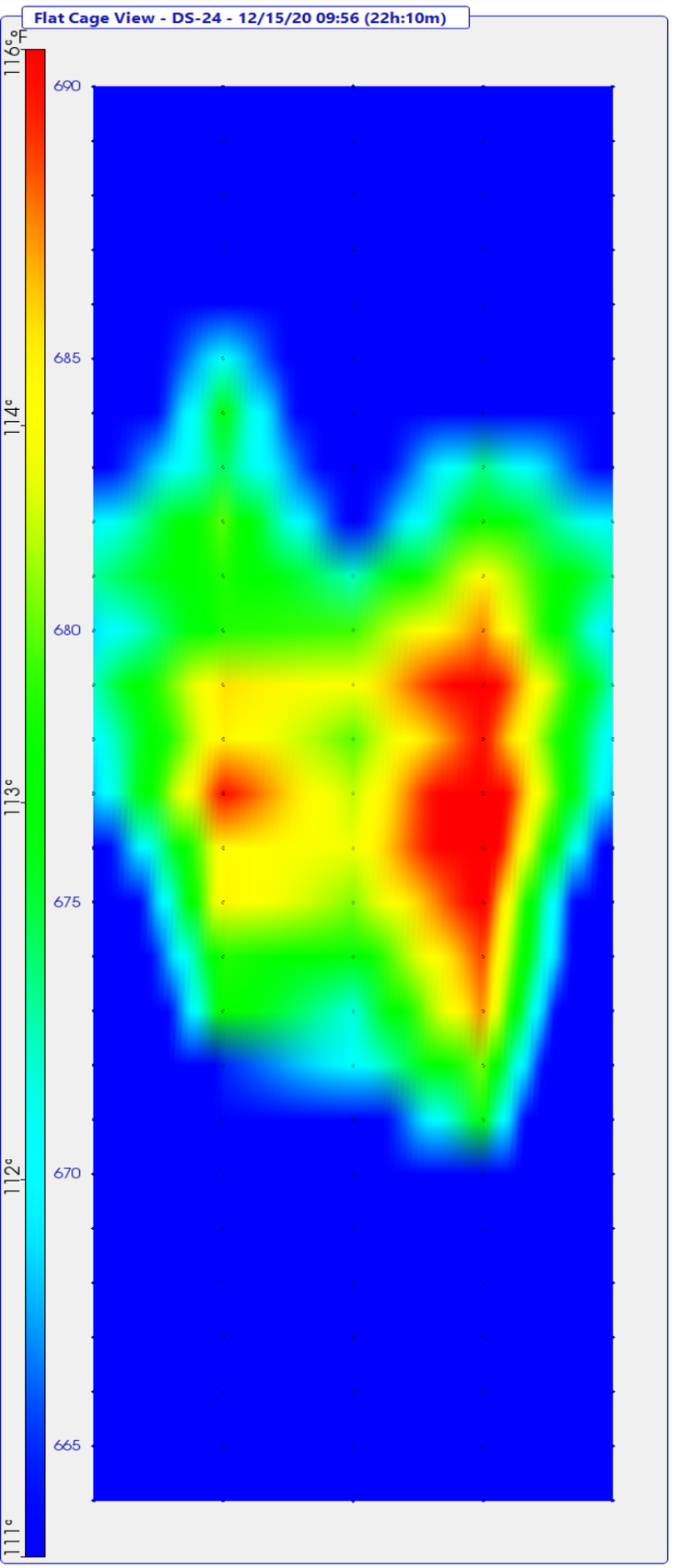

TIP-R Results - Radius Analysis Tools

Project: 195067-9 - Kokosing - OC3 Railroad TIP Phase 2
Shaft: DS-24
Timestamp: 12/15/20 09:56 (22h:10m)

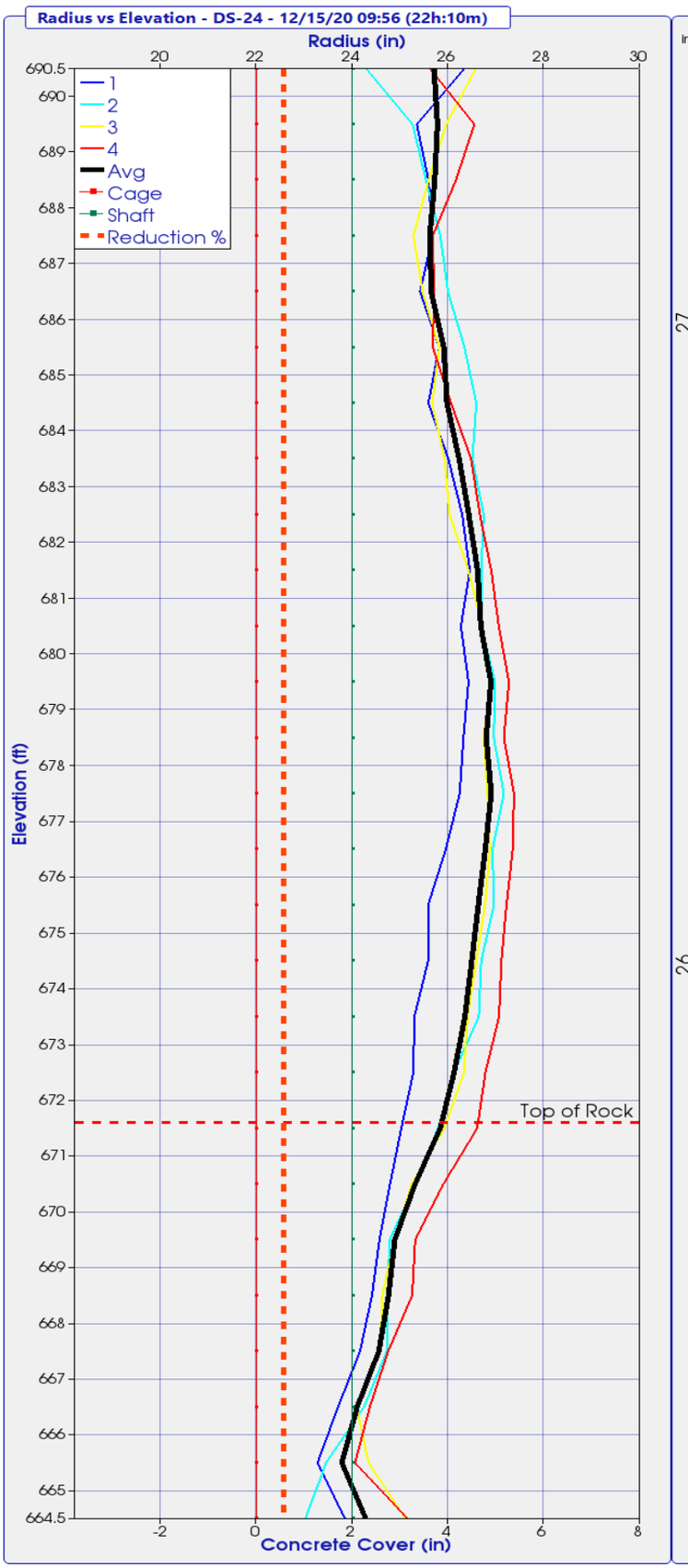

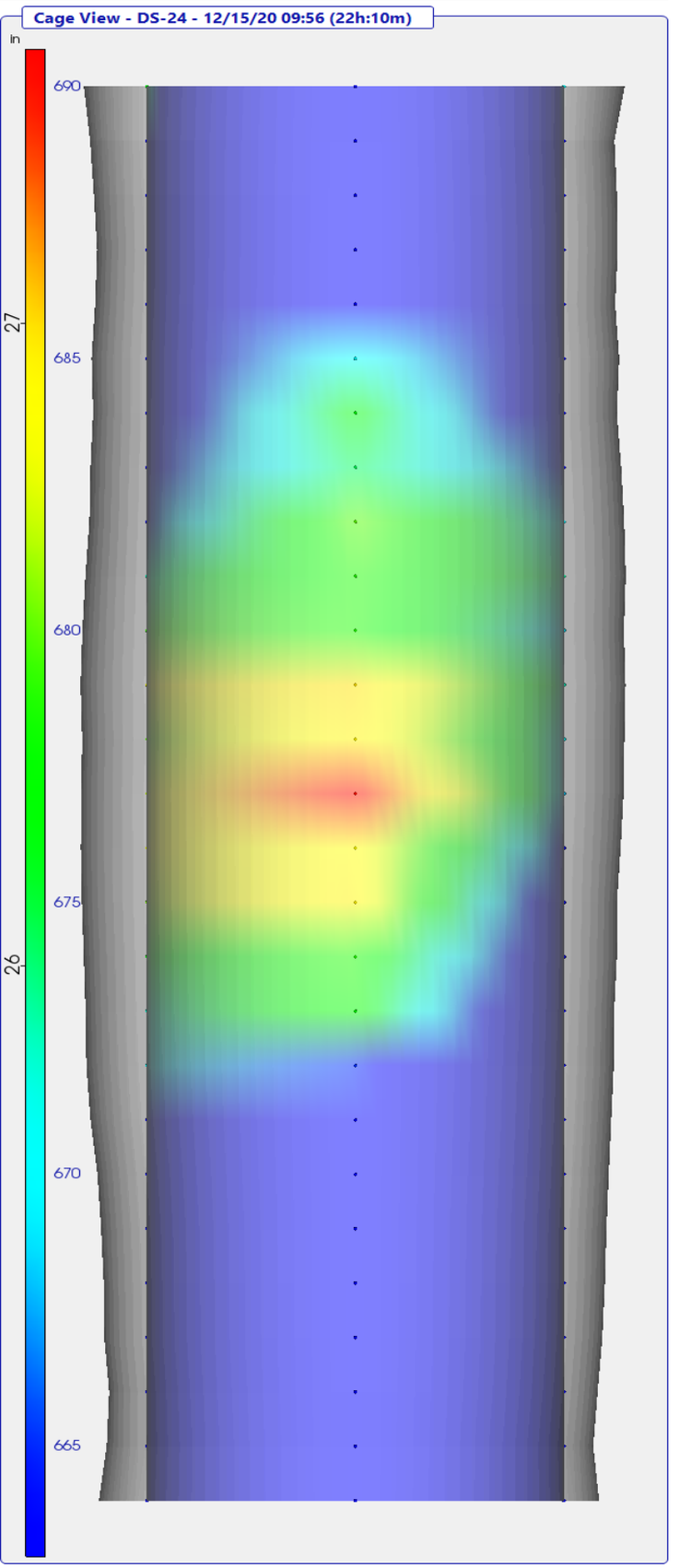

TIP-R Results - Radius Location Analysis

Project: 195067-9 - Kokosing - OC3 Railroad TIP Phase 2

Shaft: DS-24

Timestamp: 12/15/20 09:56 (22h:10m)

Adjustments Applied: Top (yes) Bottom (yes) Mid-Shaft (no)

Elevation (ft)	Wire 1 Radius (in)	Wire 2 Radius (in)	Wire 3 Radius (in)	Wire 4 Radius (in)	Effective Average Radius(in)
690.5	26.3	24.3	26.6	25.6	25.7
689.5	25.4	25.3	26.0	26.6	25.8
688.5	25.6	25.5	25.6	26.2	25.7
687.5	25.7	25.8	25.3	25.7	25.6
686.5	25.4	26.0	25.5	25.7	25.7
685.5	25.8	26.3	25.8	25.7	25.9
684.5	25.6	26.6	25.7	26.1	26.0
683.5	26.0	26.5	25.9	26.5	26.2
682.5	26.3	26.7	26.0	26.7	26.4
681.5	26.5	26.7	26.4	26.9	26.6
680.5	26.3	26.7	26.7	27.1	26.7
679.5	26.4	27.0	26.9	27.3	26.9
678.5	26.3	27.0	26.7	27.2	26.8
677.5	26.2	27.2	26.8	27.4	26.9
676.5	26.0	26.9	26.9	27.4	26.8
675.5	25.6	27.0	26.8	27.2	26.6
674.5	25.6	26.7	26.6	27.1	26.5
673.5	25.3	26.6	26.4	27.1	26.4
672.5	25.3	26.1	26.3	26.8	26.1
671.5	25.0	25.8	25.9	26.6	25.8
670.5	24.8	25.3	25.2	25.9	25.3
669.5	24.6	24.8	24.9	25.3	24.9
668.5	24.4	24.7	24.6	25.3	24.8
667.5	24.2	24.7	24.6	24.8	24.6
666.5	23.7	24.2	24.1	24.4	24.1
665.5	23.3	23.5	24.3	24.1	23.8
664.5	23.8	23.0	25.1	25.2	24.3

TIP-R Results - Radius Reduction Analysis

Project: 195067-9 - Kokosing - OC3 Railroad TIP Phase 2
Shaft: DS-24
Timestamp: 12/15/20 09:56 (22h:10m)

Adjustments Applied: Top (yes) Bottom (yes) Mid-Shaft (no)

Elevation (ft)	Design Radius (in)	Effective Radius (in)	Radius Reduction % > 6.00%
690.5	24.0	25.7	
689.5	24.0	25.8	
688.5	24.0	25.7	
687.5	24.0	25.6	
686.5	24.0	25.7	
685.5	24.0	25.9	
684.5	24.0	26.0	
683.5	24.0	26.2	
682.5	24.0	26.4	
681.5	24.0	26.6	
680.5	24.0	26.7	
679.5	24.0	26.9	
678.5	24.0	26.8	
677.5	24.0	26.9	
676.5	24.0	26.8	
675.5	24.0	26.6	
674.5	24.0	26.5	
673.5	24.0	26.4	
672.5	24.0	26.1	
671.5	24.0	25.8	
670.5	24.0	25.3	
669.5	24.0	24.9	
668.5	24.0	24.8	
667.5	24.0	24.6	
666.5	24.0	24.1	
665.5	24.0	23.8	
664.5	24.0	24.3	

TIP-R Results - TOS/BOS Adjustments

Project: 195067-9 - Kokosing - OC3 Railroad TIP Phase 2
Shaft: DS-24
Timestamp: 12/15/20 09:56 (22h:10m)

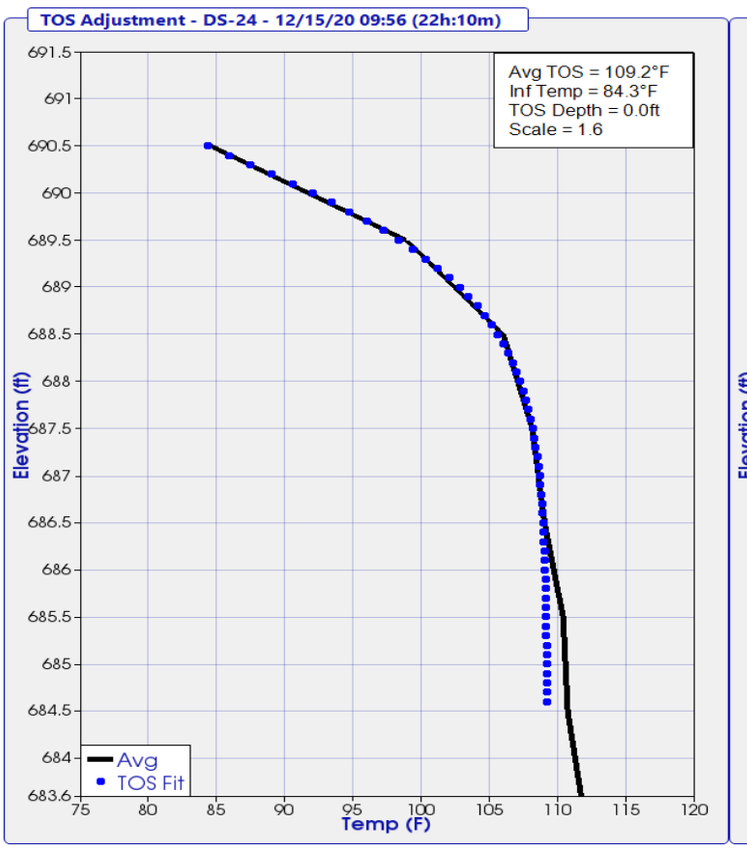

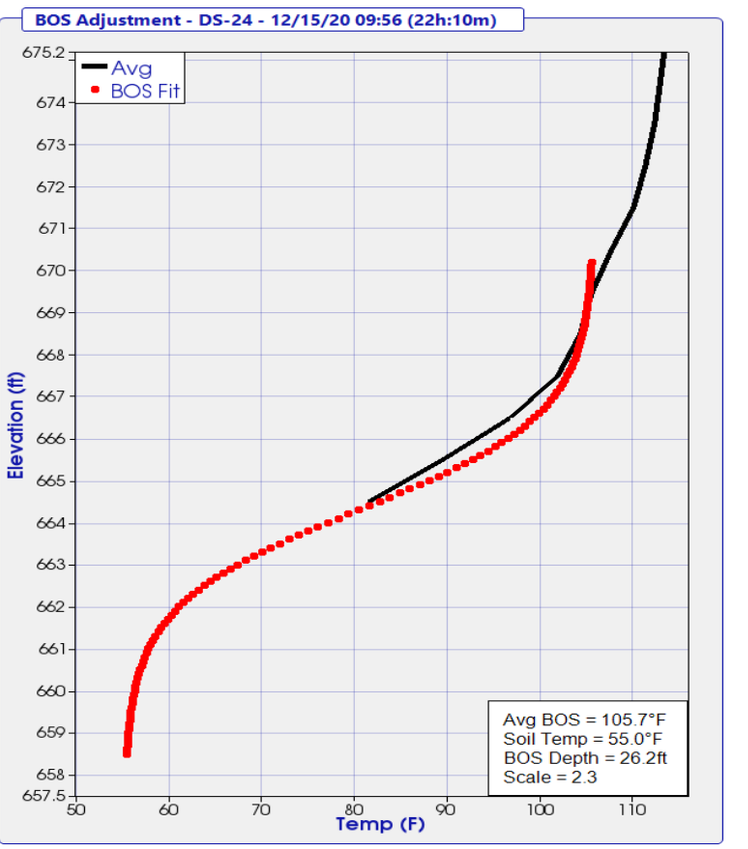

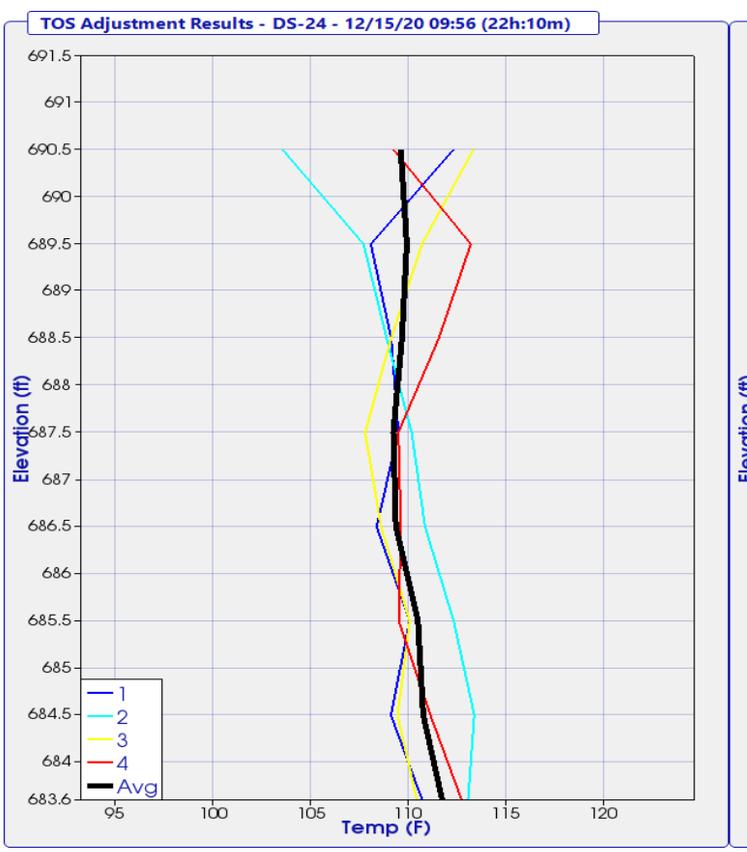

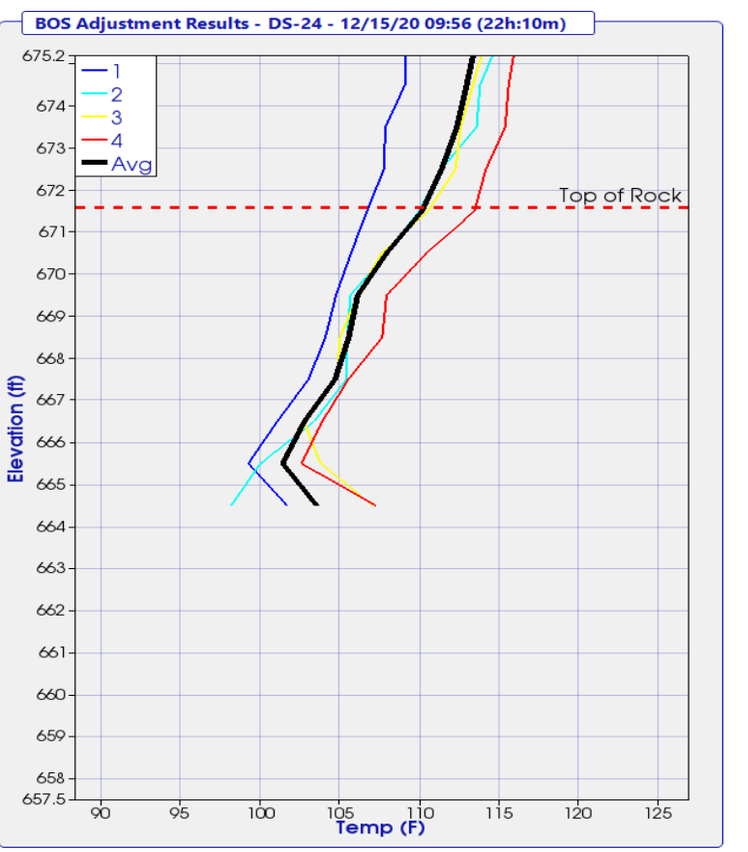

ERMAL FIELD LOG

Project: BC3
Pier No.: Rear Abut

Date Placed: 12/14/2020
Shaft No.: 0524

N

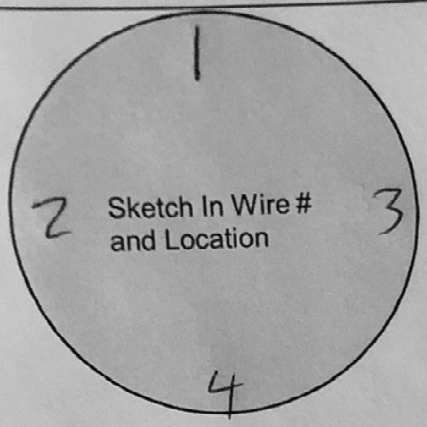

Wire #	Serial #	Wire Length (#nodes)	Nodes Above Concrete	Wire Tested After Install
1	17738	35		Yes
2	17734	↓		↓
3	17588	↓		↓
4	17747			

Designate Northerly wire as #1

Wire-Wire Distance		
1-3 ____ in.	2-3 ____ in.	4-3 ____ in.
2-1 ____ in.	4-1 ____ in.	

Shaft Information	Design	As-Built
Shaft Dia.	____ in.	50 in.
Shaft Length	____ ft.	26.29 ft.
Concrete Vol.	____ cy.	14 cy.
Cage Length	____ ft.	26 ft.
Cage Dia.	____ in.	____ in.
Casing Dia. (perm./temp.)	____ in.	____ in.
Casing Length	____ ft.	____ ft.
Rock Socket Dia.	____ in.	____ in.
Rock Socket Length	____ ft.	7.5 ft.

Elevation

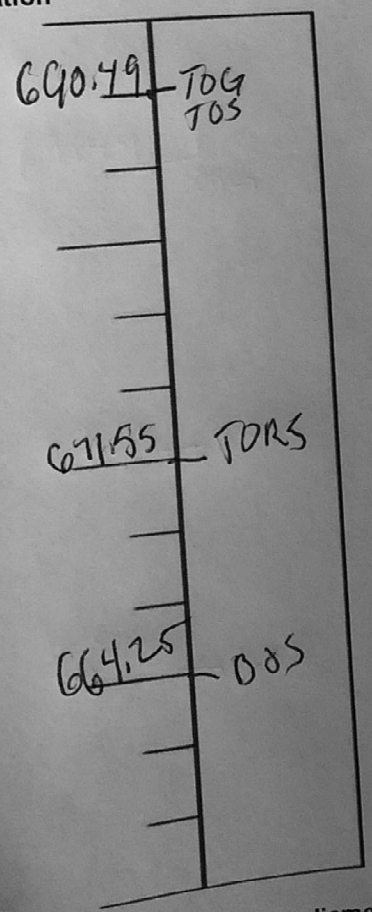

*** indicate changes in diameter**

Field Notes:

Start of Placement -

End of Placement -

Placement Method -

Legend

TOC	Top of Casing	BOC	Bottom of Casing
TOG	Top of Ground	BORC	Bottom of Reinf. Cage
TOS	Top of Shaft	BOS	Bottom of Shaft
TORS	Top of Rock Socket	▼	Water Level

Please Submit with Concrete Placement Log and Installation Record

4 Wire - Shaft

Completed By: [illegible]

TIP-R Results - Temperature Analysis Tools

Project: 195067-9 - Kokosing - OC3 Railroad TIP Phase 2
Shaft: DS-25
Timestamp: 12/09/20 07:17 (17h:37m)

Pile Dynamics, Inc.

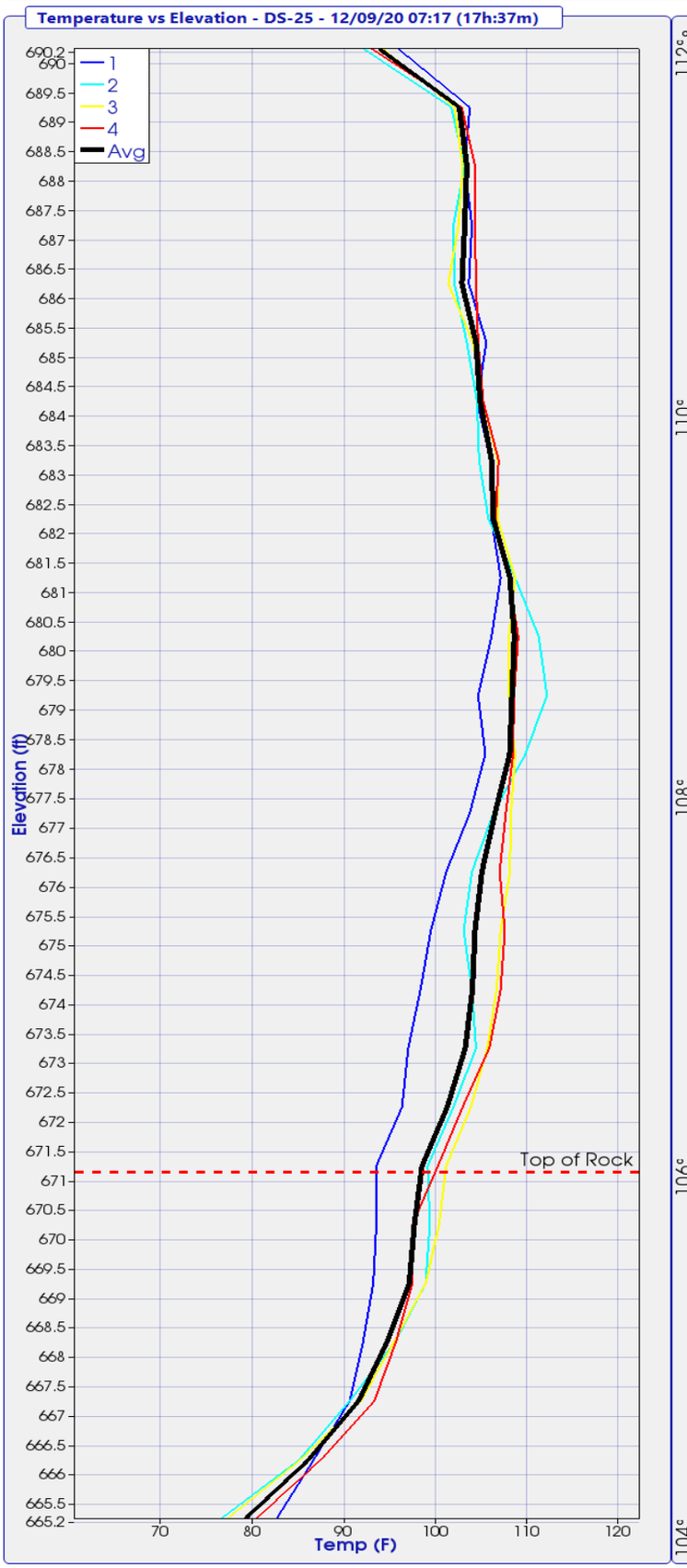

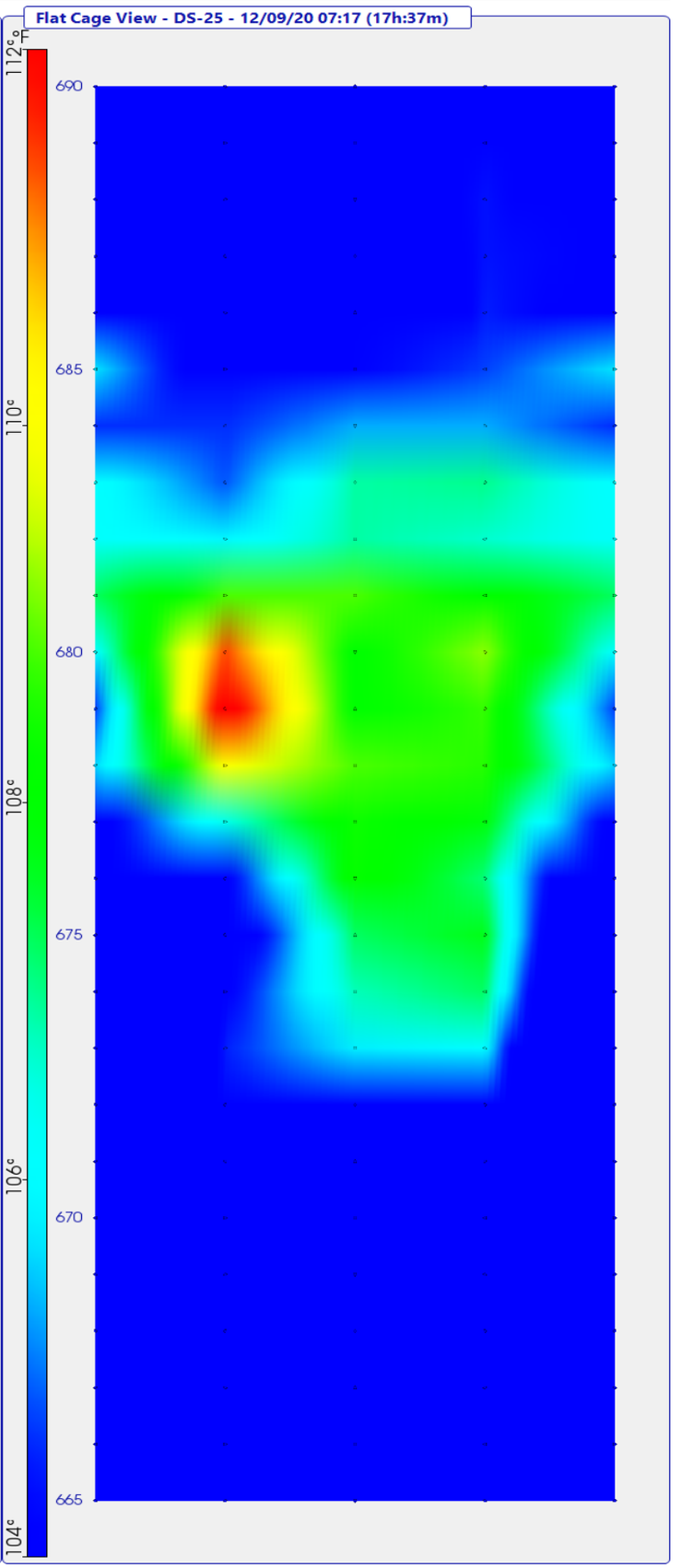

TIP-R Results - Radius Analysis Tools

Project: 195067-9 - Kokosing - OC3 Railroad TIP Phase 2
Shaft: DS-25
Timestamp: 12/09/20 07:17 (17h:37m)

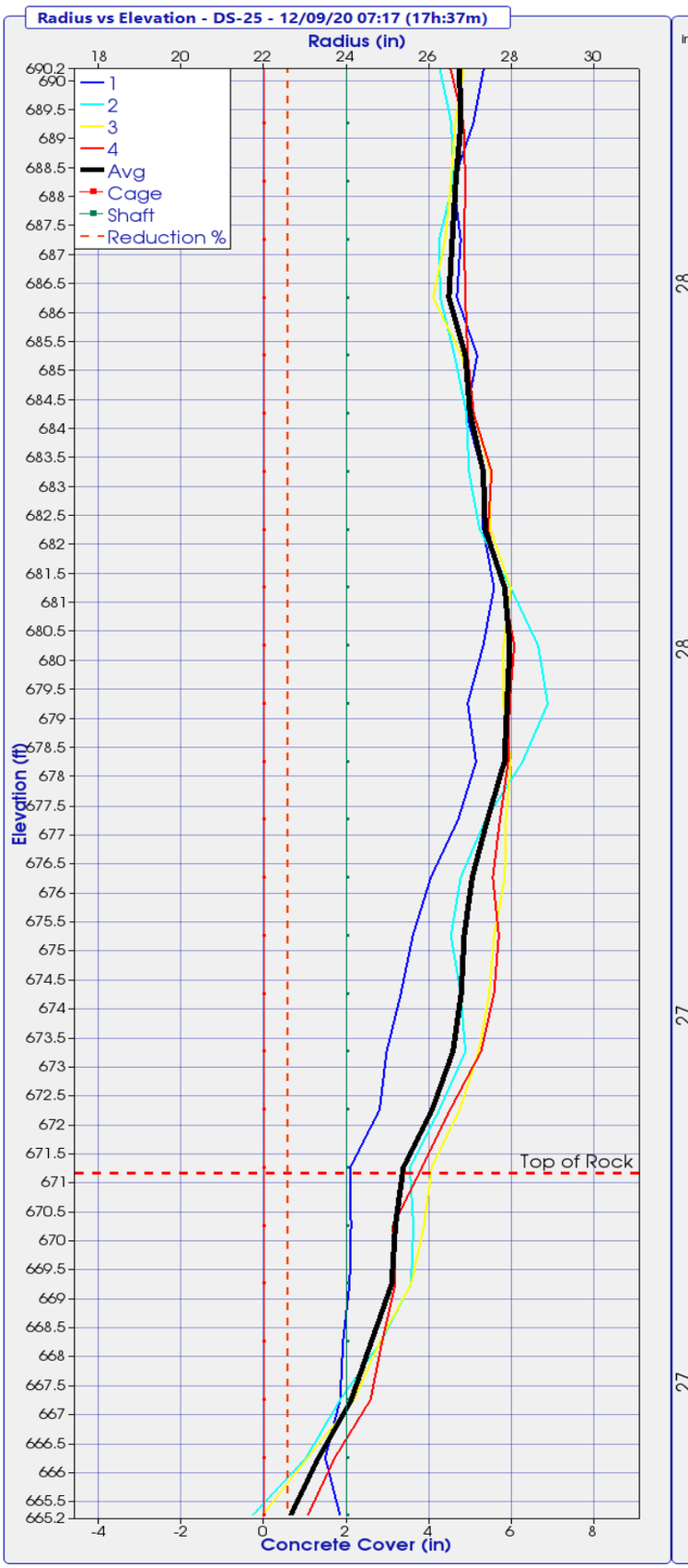

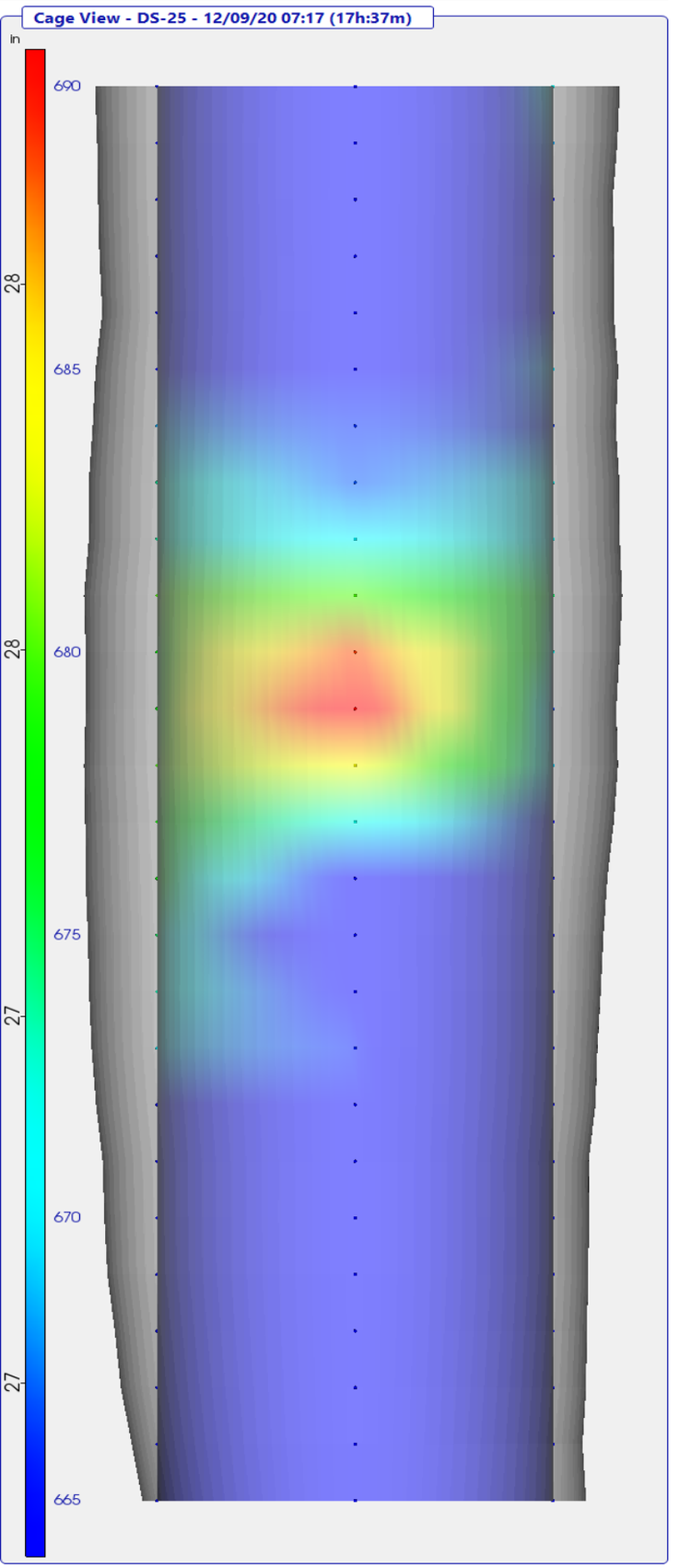

TIP-R Results - Radius Location Analysis

Project: 195067-9 - Kokosing - OC3 Railroad TIP Phase 2

Shaft: DS-25

Timestamp: 12/09/20 07:17 (17h:37m)

Adjustments Applied: Top (yes) Bottom (yes) Mid-Shaft (no)

Elevation (ft)	Wire 1 Radius (in)	Wire 2 Radius (in)	Wire 3 Radius (in)	Wire 4 Radius (in)	Effective Average Radius(in)
690.3	27.3	26.2	26.9	26.5	26.7
689.3	27.1	26.5	26.6	26.8	26.8
688.3	26.6	26.6	26.5	26.9	26.6
687.3	26.8	26.2	26.4	26.9	26.6
686.3	26.7	26.3	26.1	26.9	26.5
685.3	27.2	26.6	26.8	26.9	26.9
684.3	26.9	26.9	27.1	27.1	27.0
683.3	27.3	27.0	27.5	27.5	27.3
682.3	27.3	27.2	27.5	27.4	27.4
681.3	27.6	28.0	28.0	27.8	27.8
680.3	27.3	28.6	27.8	28.1	28.0
679.3	26.9	28.9	27.8	27.9	27.9
678.3	27.1	28.3	28.0	27.9	27.8
677.3	26.7	27.4	27.9	27.7	27.4
676.3	26.0	26.8	27.8	27.5	27.0
675.3	25.6	26.5	27.6	27.7	26.9
674.3	25.3	26.8	27.5	27.6	26.8
673.3	25.0	26.9	27.2	27.3	26.6
672.3	24.8	26.2	26.7	26.5	26.1
671.3	24.1	25.5	26.1	25.8	25.4
670.3	24.1	25.6	25.9	25.1	25.2
669.3	24.1	25.6	25.6	25.2	25.1
668.3	23.9	24.8	24.8	24.9	24.6
667.3	23.8	23.8	24.2	24.6	24.1
666.3	23.5	23.0	23.1	23.7	23.3
665.3	23.8	21.7	21.9	23.1	22.6

TIP-R Results - Radius Reduction Analysis

Project: 195067-9 - Kokosing - OC3 Railroad TIP Phase 2

Shaft: DS-25

Timestamp: 12/09/20 07:17 (17h:37m)

Adjustments Applied: Top (yes) Bottom (yes) Mid-Shaft (no)

Elevation (ft)	Design Radius (in)	Effective Radius (in)	Radius Reduction % > 6.00%
690.3	24.0	26.7	
689.3	24.0	26.8	
688.3	24.0	26.6	
687.3	24.0	26.6	
686.3	24.0	26.5	
685.3	24.0	26.9	
684.3	24.0	27.0	
683.3	24.0	27.3	
682.3	24.0	27.4	
681.3	24.0	27.8	
680.3	24.0	28.0	
679.3	24.0	27.9	
678.3	24.0	27.8	
677.3	24.0	27.4	
676.3	24.0	27.0	
675.3	24.0	26.9	
674.3	24.0	26.8	
673.3	24.0	26.6	
672.3	24.0	26.1	
671.3	24.0	25.4	
670.3	24.0	25.2	
669.3	24.0	25.1	
668.3	24.0	24.6	
667.3	24.0	24.1	
666.3	24.0	23.3	
665.3	24.0	22.6	

TIP-R Results - TOS/BOS Adjustments

Project: 195067-9 - Kokosing - OC3 Railroad TIP Phase 2
Shaft: DS-25
Timestamp: 12/09/20 07:17 (17h:37m)

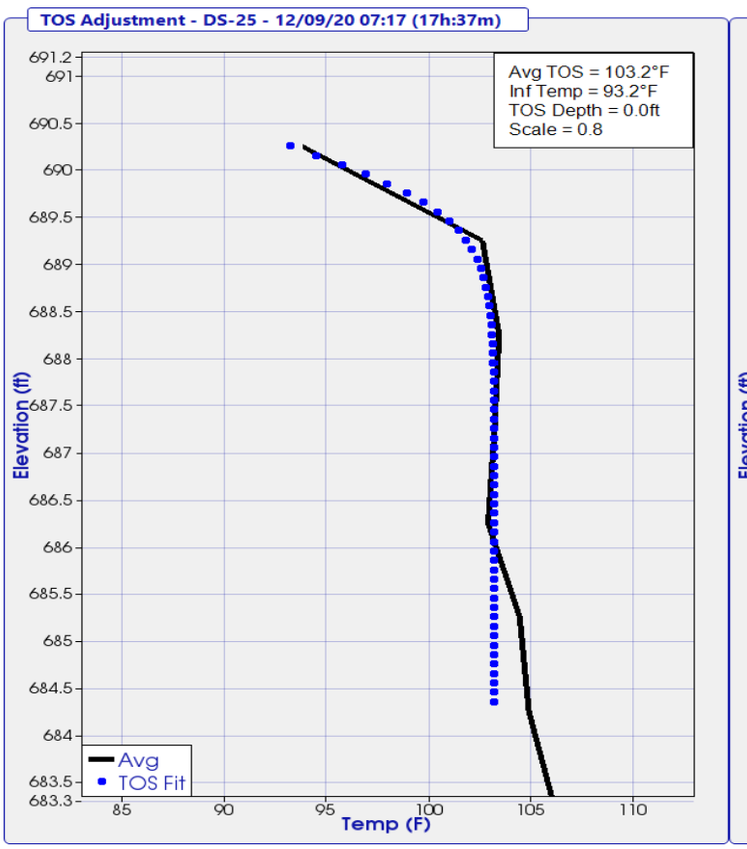

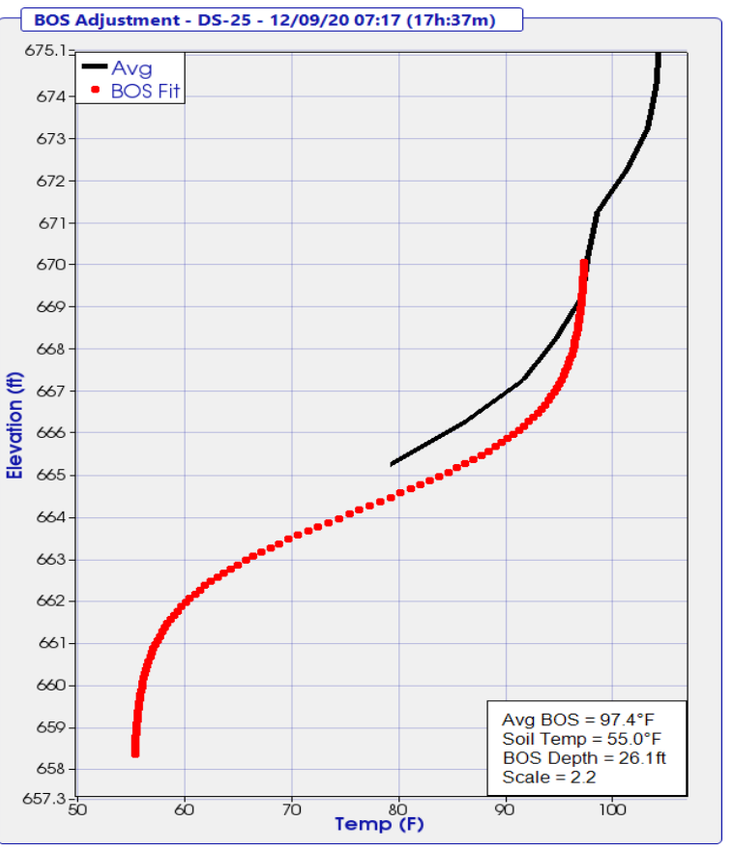

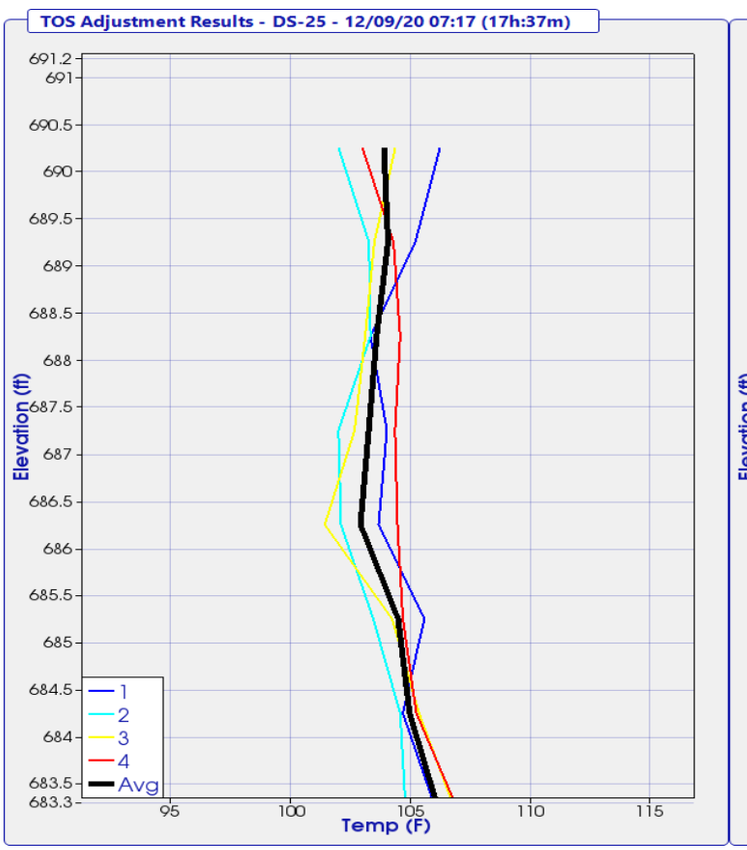

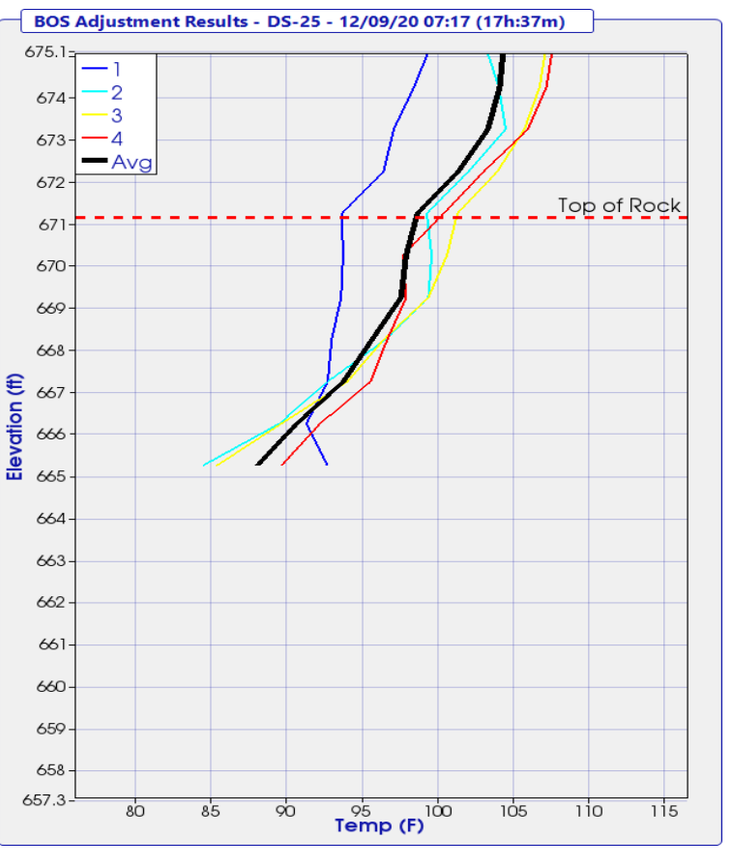

THERMAL FIELD LOG

Project: OC3
Pier No.: DS 25

Date Placed: 12/8/2020
Shaft No.: DS 25

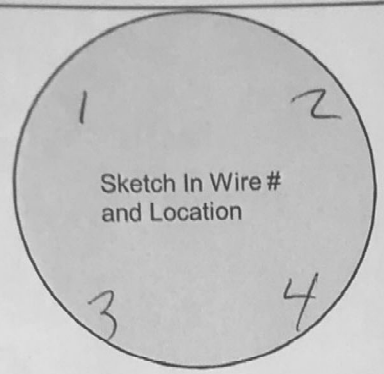

Wire #	Serial #	Wire Length (#nodes)	Nodes Above Concrete	Wire Tested After Install
1	17596	40		Yes
2	17522	↓		↓
3	17475			
4	17365			

Designate Northerly wire as #1

Wire-Wire Distance		
1-3 ____ in.	2-3 ____ in.	4-3 ____ in.
2-1 ____ in.	4-1 ____ in.	

Shaft Information	Design	As-Built
Shaft Dia.	____ in.	50 in.
Shaft Length	____ ft.	26'3 ft.
Concrete Vol.	____ cy.	14 cy.
Cage Length	____ ft.	26 ft.
Cage Dia.	____ in.	____ in.
Casing Dia. (perm./temp.)	____ in.	____ in.
Casing Length	____ ft.	____ ft.
Rock Socket Dia.	____ in.	____ in.
Rock Socket Length	____ ft.	7 ft.

Elevation

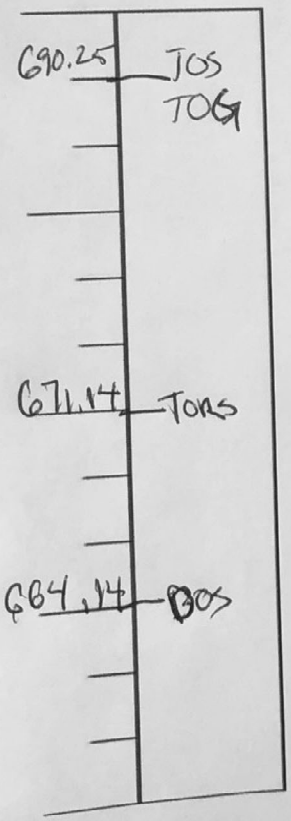

* indicate changes in diameter

Field Notes:
Start of Placement -
End of Placement -
Placement Method -

Legend

TOC	Top of Casing	BOC	Bottom of Casing
TOG	Top of Ground	BORC	Bottom of Reinf. Cage
TOS	Top of Shaft	BOS	Bottom of Shaft
TORS	Top of Rock Socket	▼	Water Level

Completed By: [signature]

Please Submit with Concrete Placement Log and Installation Record

4 Wire - Shaft

TIP-R Results - Temperature Analysis Tools

Project: 195067-9 - Kokosing - OC3 Railroad TIP Phase 2
Shaft: DS-26
Timestamp: 12/12/20 06:27 (15h:31m)

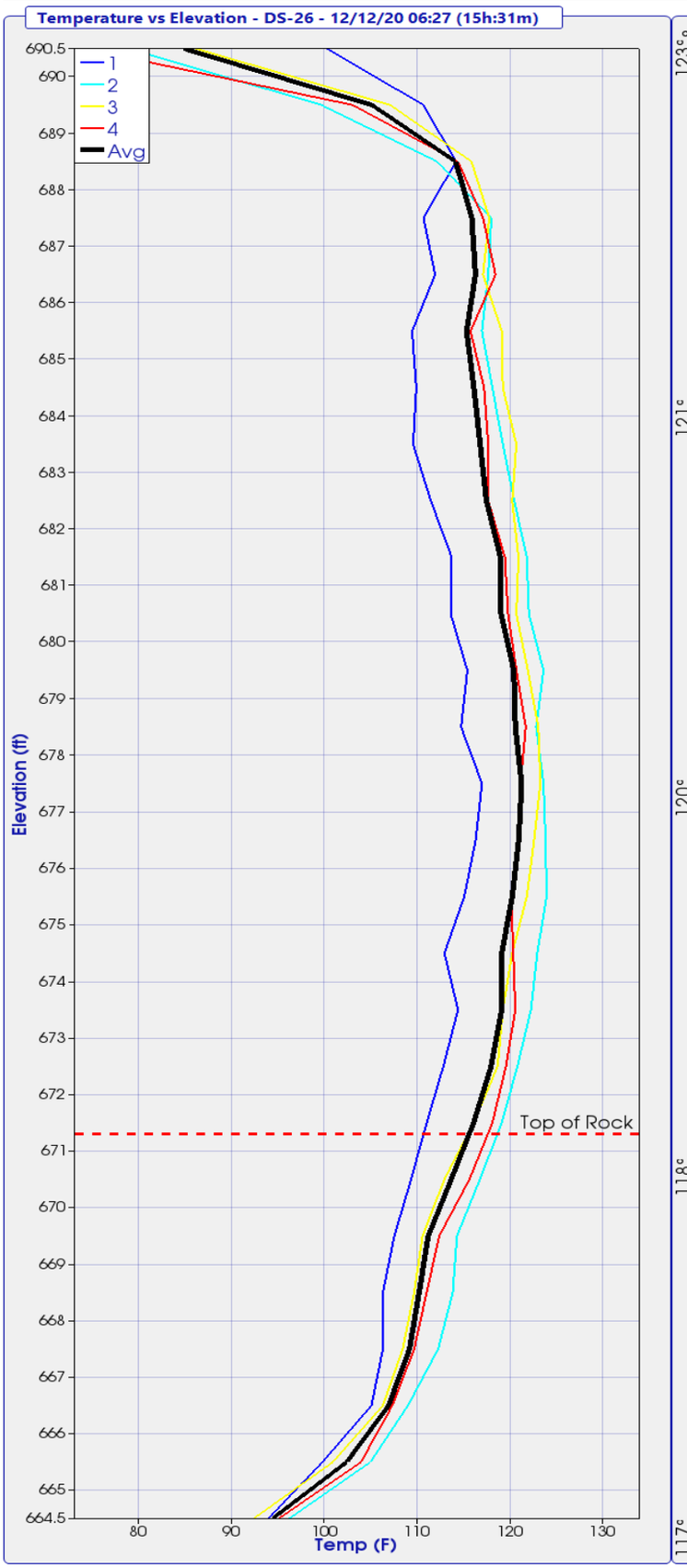

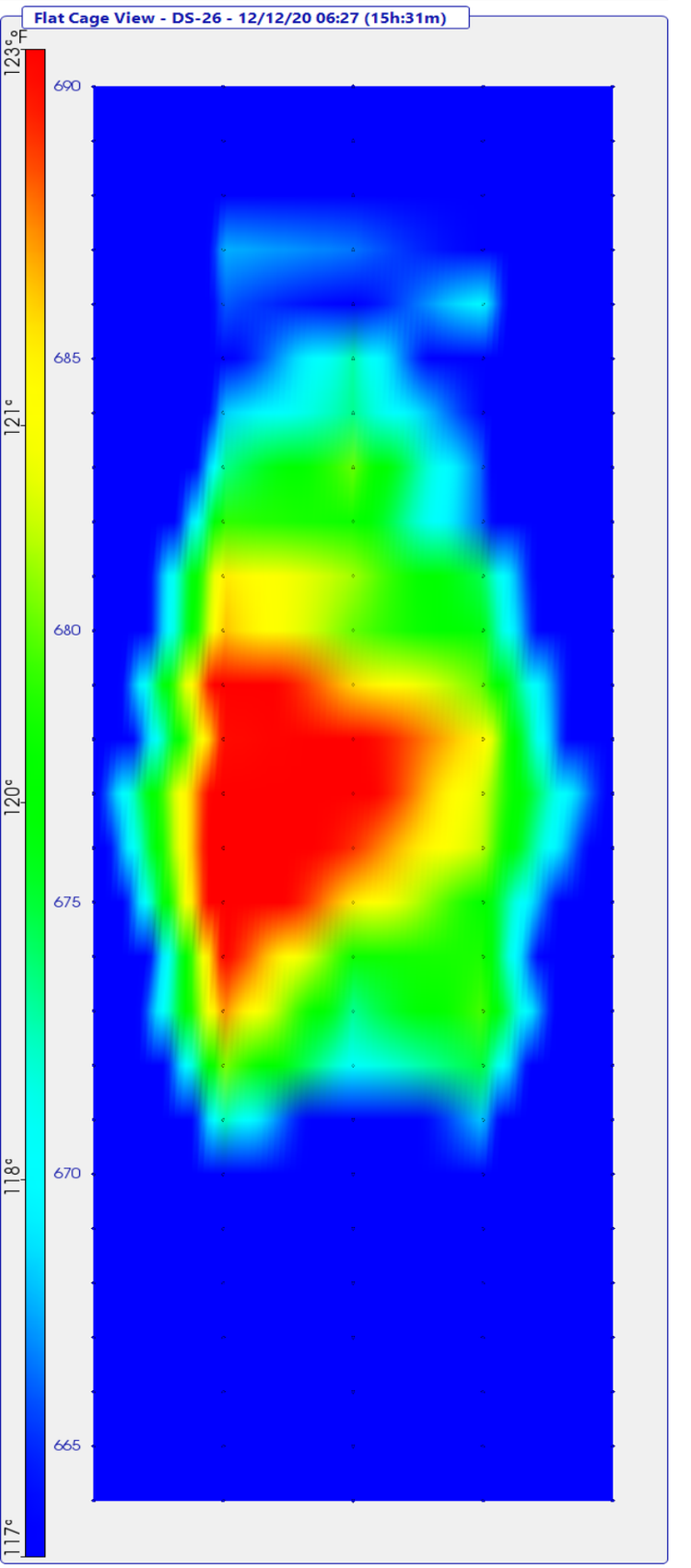

TIP-R Results - Radius Analysis Tools

Project: 195067-9 - Kokosing - OC3 Railroad TIP Phase 2
Shaft: DS-26
Timestamp: 12/12/20 06:27 (15h:31m)

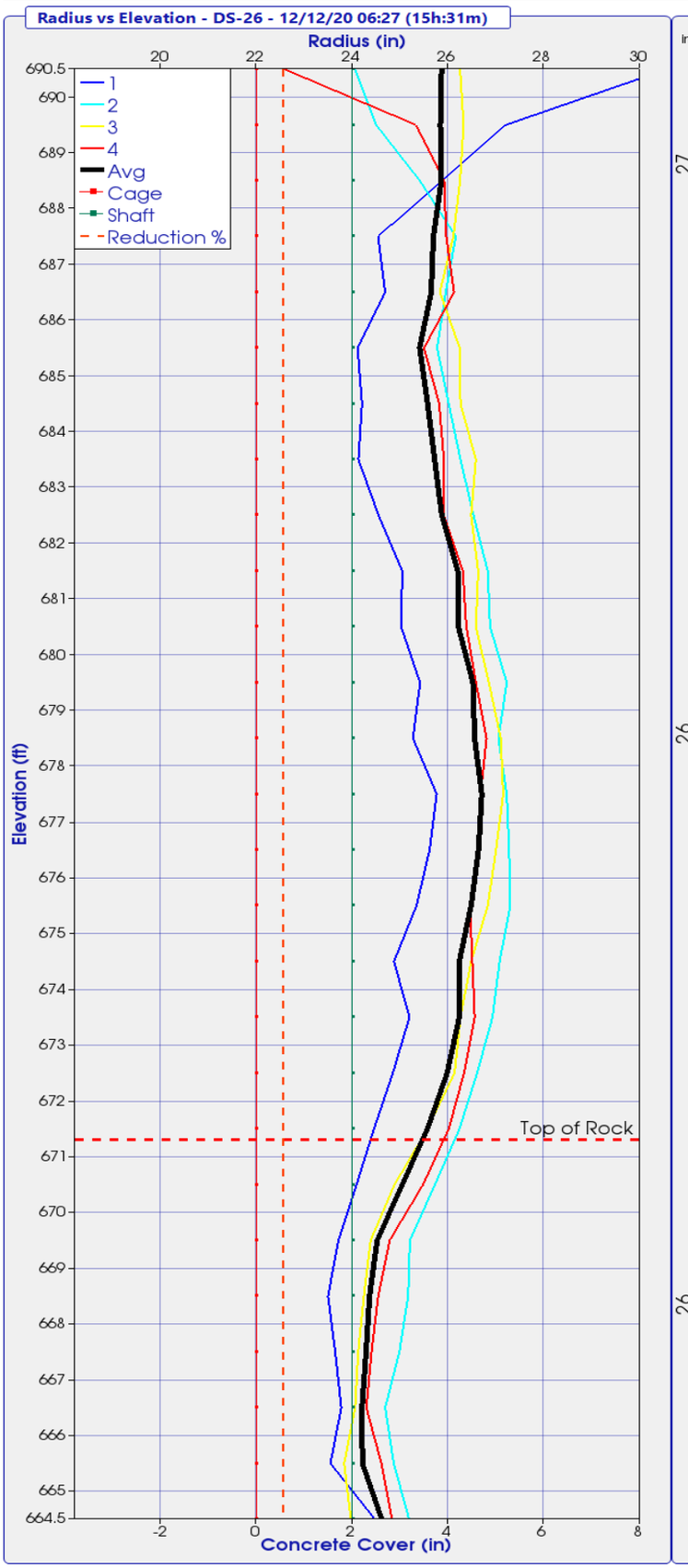

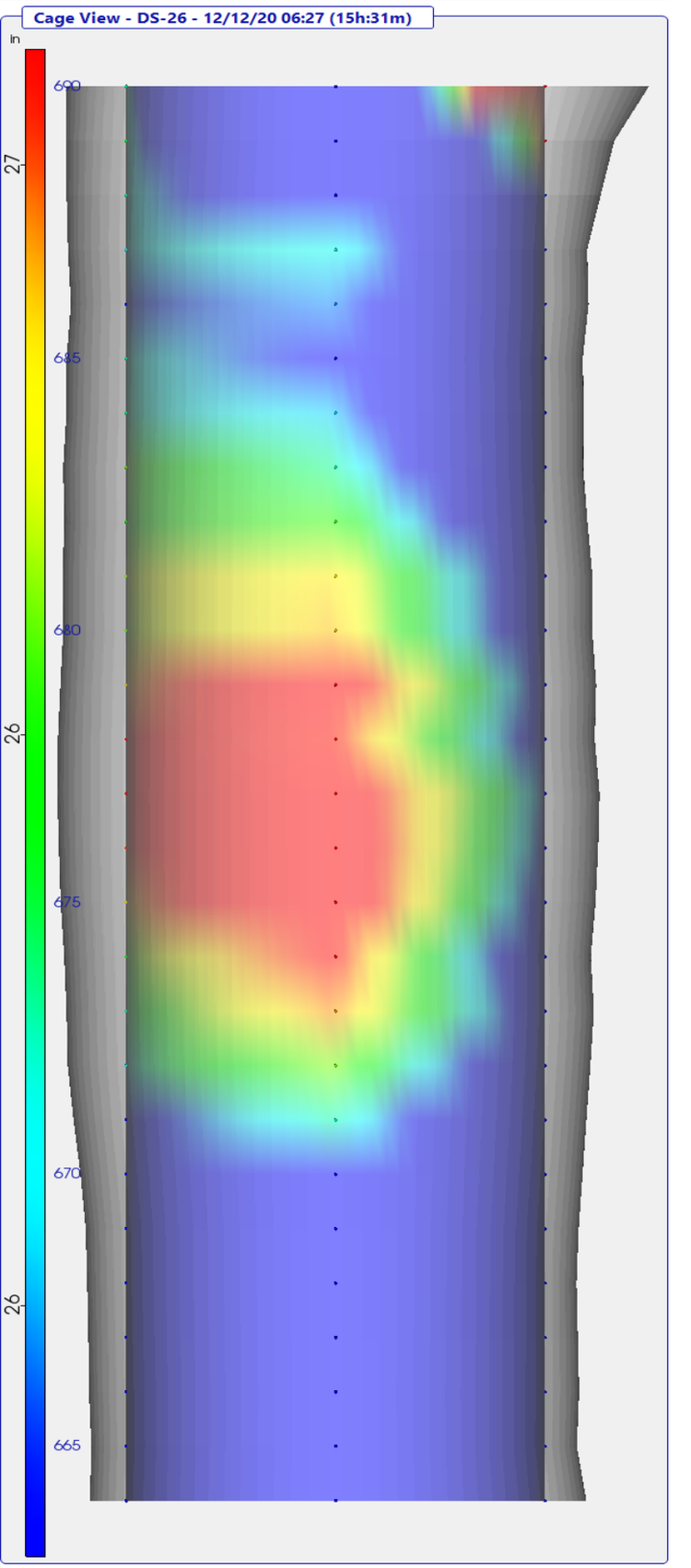

TIP-R Results - Radius Location Analysis

Project: 195067-9 - Kokosing - OC3 Railroad TIP Phase 2

Shaft: DS-26

Timestamp: 12/12/20 06:27 (15h:31m)

Adjustments Applied: Top (yes) Bottom (yes) Mid-Shaft (no)

Elevation (ft)	Wire 1 Radius (in)	Wire 2 Radius (in)	Wire 3 Radius (in)	Wire 4 Radius (in)	Effective Average Radius(in)
690.5	30.6	24.1	26.3	22.6	25.9
689.5	27.2	24.5	26.3	25.3	25.8
688.5	25.9	25.4	26.3	25.9	25.9
687.5	24.5	26.2	26.1	26.0	25.7
686.5	24.7	26.0	25.8	26.1	25.7
685.5	24.1	25.8	26.2	25.5	25.4
684.5	24.2	26.0	26.3	25.8	25.6
683.5	24.1	26.3	26.6	25.9	25.7
682.5	24.6	26.5	26.5	25.9	25.9
681.5	25.0	26.8	26.6	26.3	26.2
680.5	25.0	26.9	26.6	26.4	26.2
679.5	25.4	27.2	26.9	26.6	26.5
678.5	25.3	27.1	27.1	26.8	26.6
677.5	25.8	27.2	27.2	26.7	26.7
676.5	25.6	27.3	27.0	26.7	26.6
675.5	25.3	27.3	26.8	26.5	26.5
674.5	24.9	27.1	26.5	26.5	26.2
673.5	25.2	26.9	26.3	26.6	26.2
672.5	24.9	26.6	26.1	26.3	26.0
671.5	24.5	26.2	25.6	26.0	25.6
670.5	24.1	25.7	24.9	25.5	25.0
669.5	23.7	25.2	24.4	24.8	24.5
668.5	23.5	25.2	24.2	24.5	24.4
667.5	23.6	25.0	24.1	24.4	24.3
666.5	23.8	24.7	24.1	24.3	24.2
665.5	23.5	24.9	23.8	24.6	24.2
664.5	24.5	25.2	24.0	24.8	24.6

TIP-R Results - Radius Reduction Analysis

Project: 195067-9 - Kokosing - OC3 Railroad TIP Phase 2

Shaft: DS-26

Timestamp: 12/12/20 06:27 (15h:31m)

Adjustments Applied: Top (yes) Bottom (yes) Mid-Shaft (no)

Elevation (ft)	Design Radius (in)	Effective Radius (in)	Radius Reduction % > 6.00%
690.5	24.0	25.9	
689.5	24.0	25.8	
688.5	24.0	25.9	
687.5	24.0	25.7	
686.5	24.0	25.7	
685.5	24.0	25.4	
684.5	24.0	25.6	
683.5	24.0	25.7	
682.5	24.0	25.9	
681.5	24.0	26.2	
680.5	24.0	26.2	
679.5	24.0	26.5	
678.5	24.0	26.6	
677.5	24.0	26.7	
676.5	24.0	26.6	
675.5	24.0	26.5	
674.5	24.0	26.2	
673.5	24.0	26.2	
672.5	24.0	26.0	
671.5	24.0	25.6	
670.5	24.0	25.0	
669.5	24.0	24.5	
668.5	24.0	24.4	
667.5	24.0	24.3	
666.5	24.0	24.2	
665.5	24.0	24.2	
664.5	24.0	24.6	

TIP-R Results - TOS/BOS Adjustments

Project: 195067-9 - Kokosing - OC3 Railroad TIP Phase 2
Shaft: DS-26
Timestamp: 12/12/20 06:27 (15h:31m)

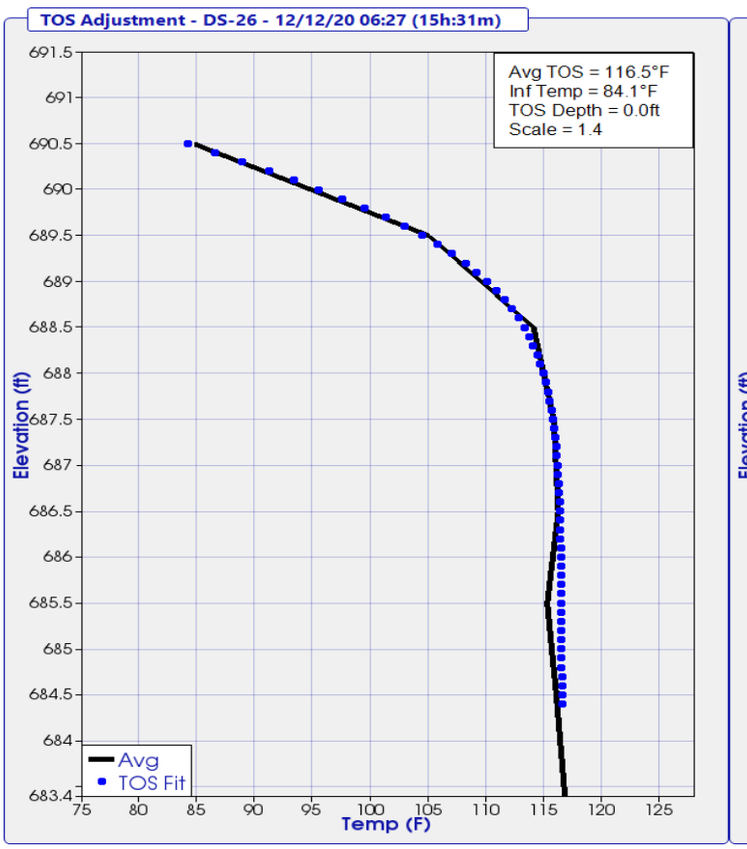

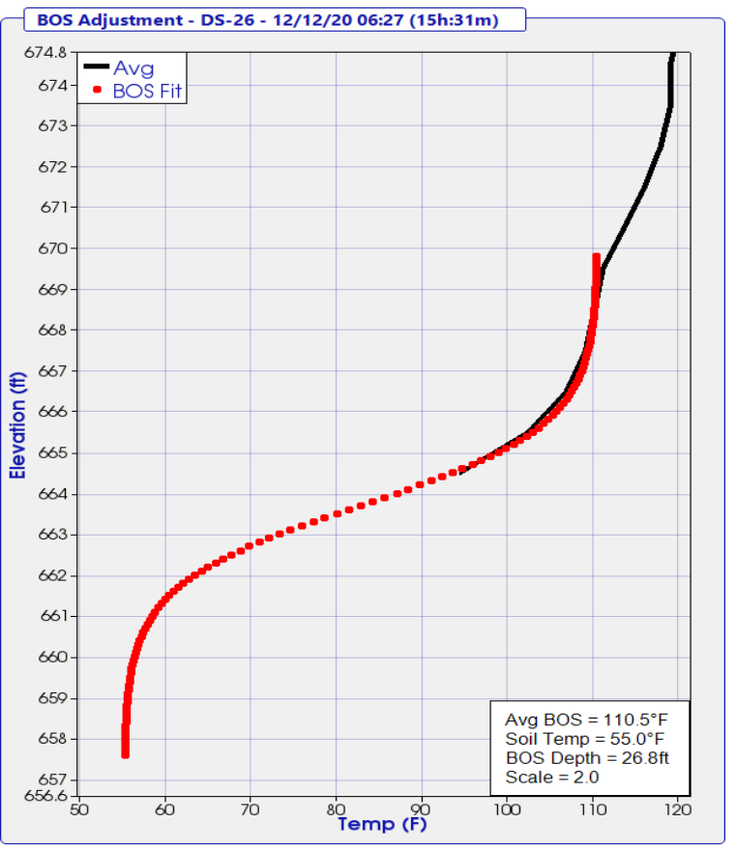

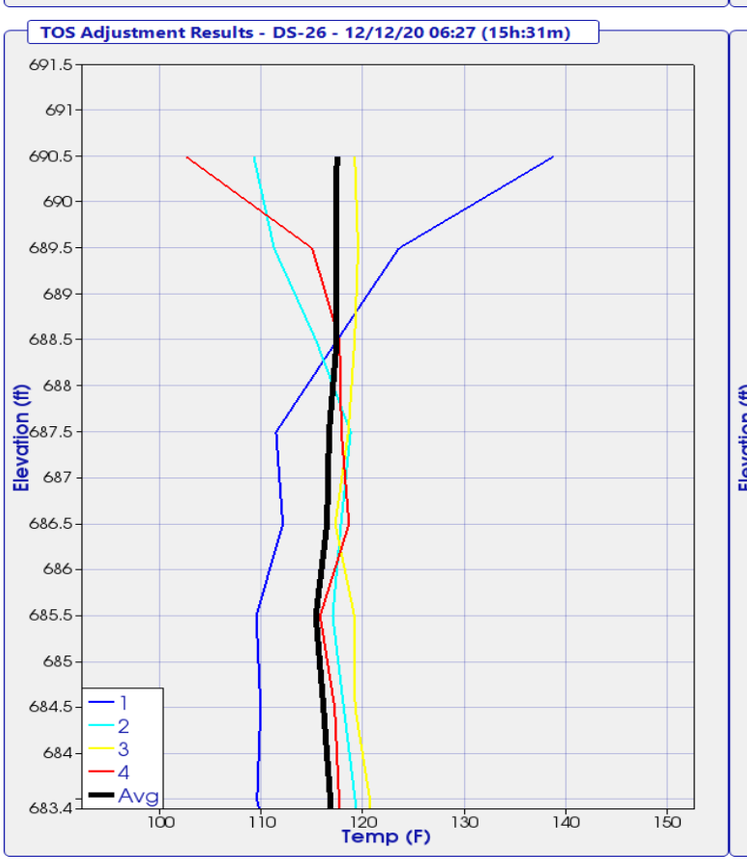

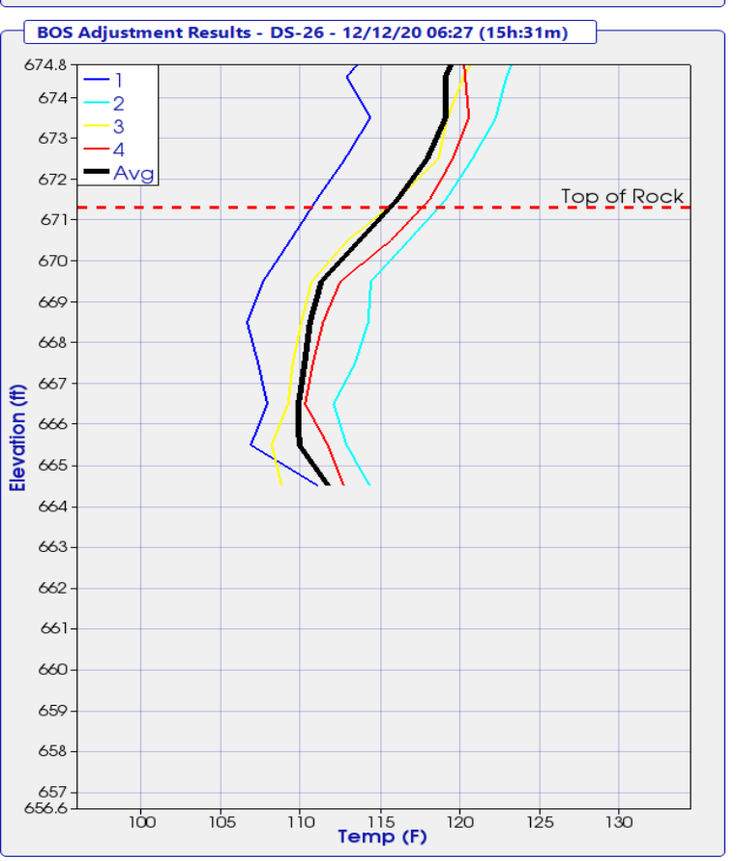

THERMAL FIELD LOG

Project: OC3
Pier No.: Rear Abut

Date Placed: 12/1/2020
Shaft No.: 0526

N

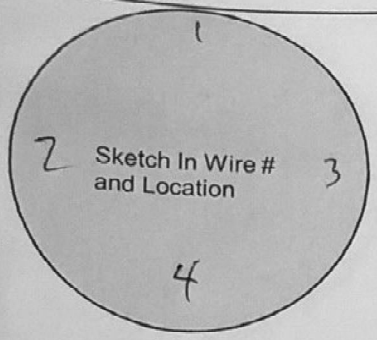

Wire #	Serial #	Wire Length (#nodes)	Nodes Above Concrete	Wire Tested After Install
1	17729	35		Yes
2	59637	40		↓
3	59638	40		↓
4	17732	35		↓

Designate Northerly wire as #1

Wire-Wire Distance		
1-3 ____ in.	2-3 ____ in.	4-3 ____ in.
2-1 ____ in.	4-1 ____ in.	

Shaft Information	Design	As-Built
Shaft Dia.	____ in.	50 in.
Shaft Length	____ ft.	26.28 ft.
Concrete Vol.	____ cy.	14 cy.
Cage Length	____ ft.	26 ft.
Cage Dia.	____ in.	____ in.
Casing Dia. (perm./temp.)	____ in.	____ in.
Casing Length	____ ft.	____ ft.
Rock Socket Dia.	____ in.	____ in.
Rock Socket Length	____ ft.	7.1 ft.

Elevation

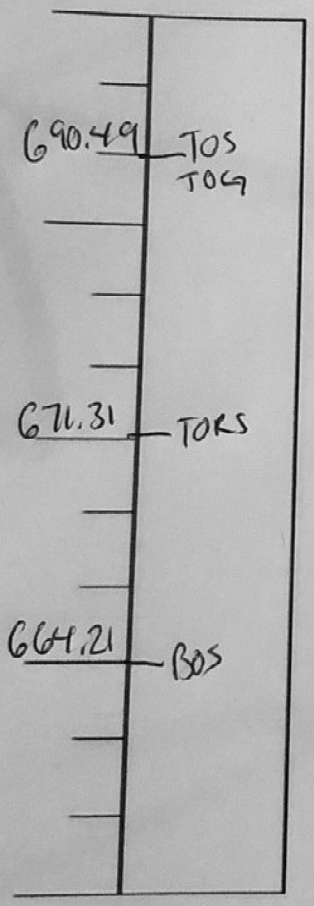

*** indicate changes in diameter**

Field Notes:

Start of Placement -

End of Placement -

Placement Method -

Legend

TOC	Top of Casing	BOC	Bottom of Casing
TOG	Top of Ground	BORC	Bottom of Reinf. Cage
TOS	Top of Shaft	BOS	Bottom of Shaft
TORS	Top of Rock Socket	▼	Water Level

Completed By: [signature]

Please Submit with Concrete Placement Log and Installation Record

4 Wire - Shaft

TIP-R Results - Temperature Analysis Tools

Project: 195067-9 - Kokosing - OC3 Railroad TIP Phase 2
Shaft: DS-27
Timestamp: 12/08/20 09:25 (17h:53m)

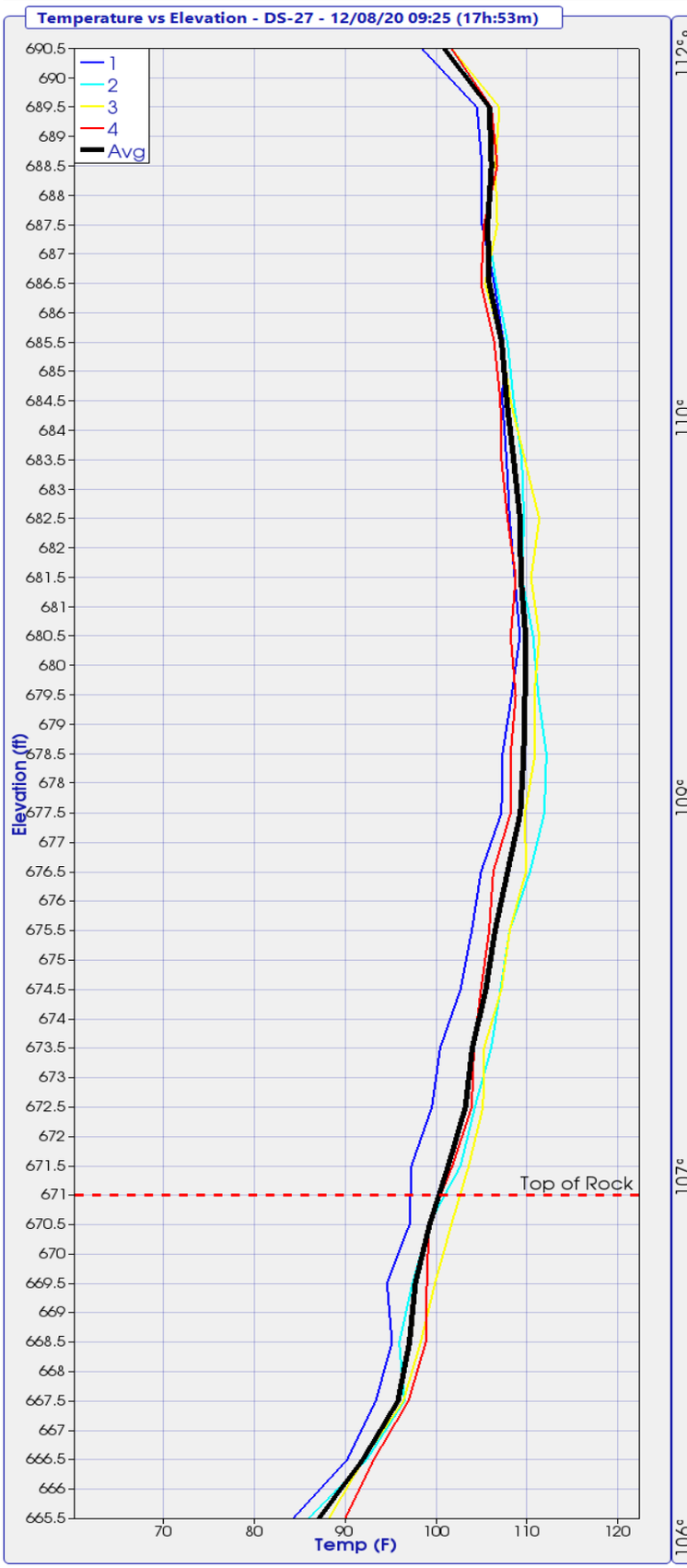

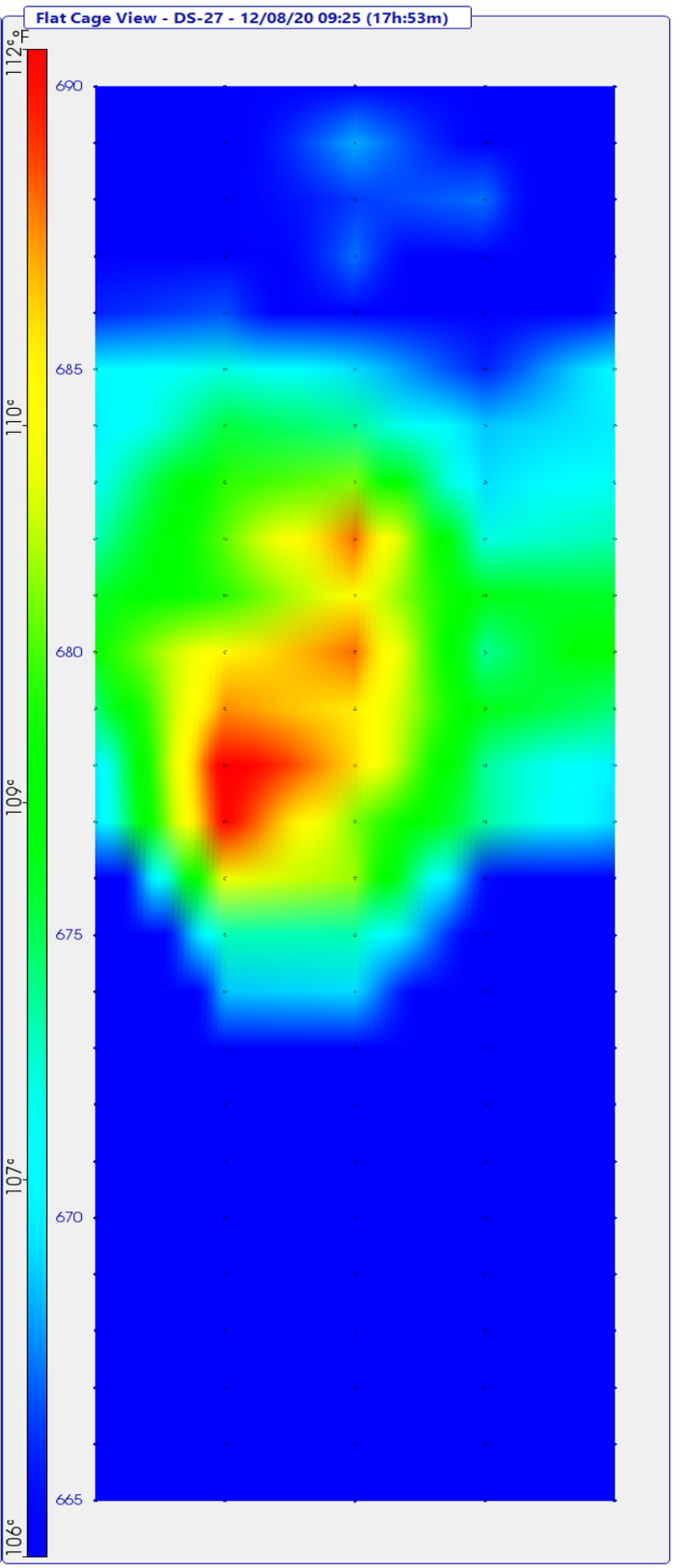

TIP-R Results - Radius Analysis Tools

Project: 195067-9 - Kokosing - OC3 Railroad TIP Phase 2
Shaft: DS-27
Timestamp: 12/08/20 09:25 (17h:53m)

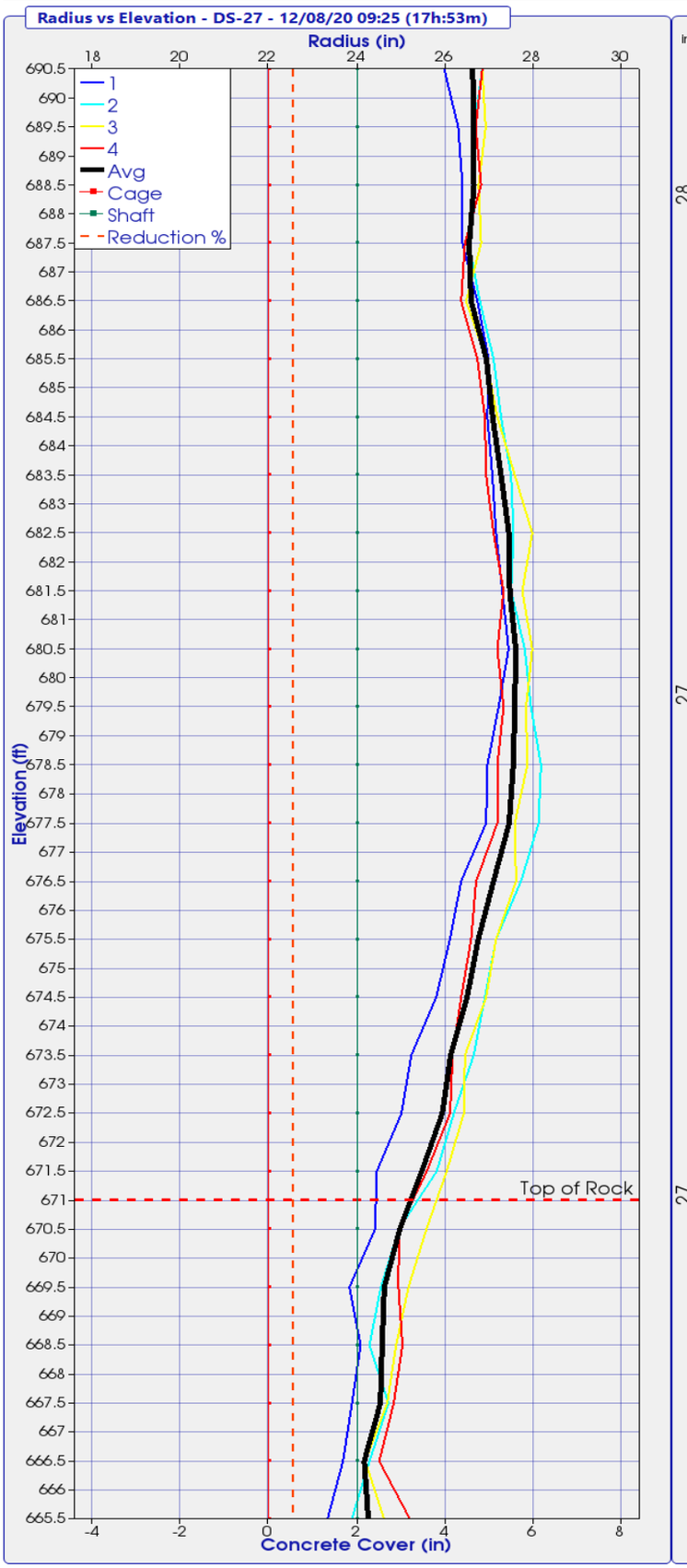

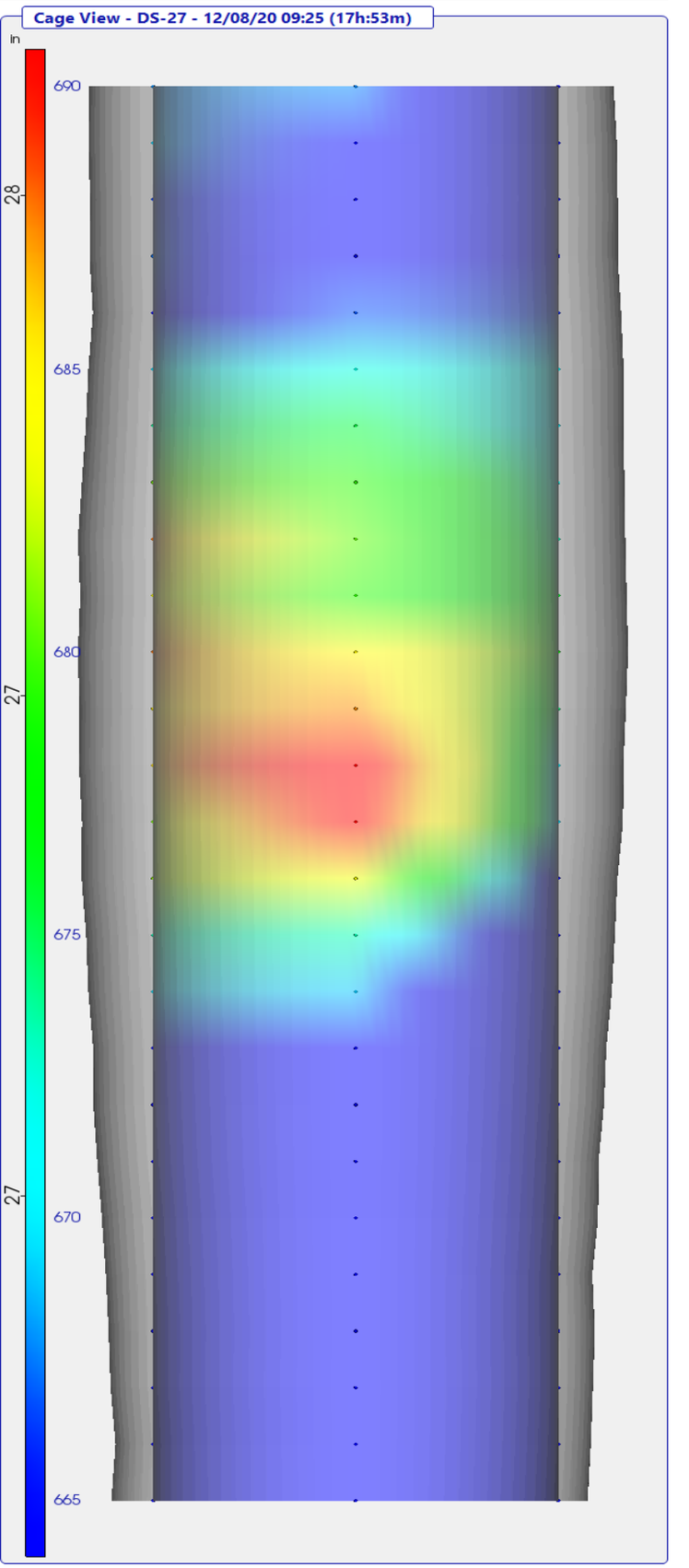

TIP-R Results - Radius Location Analysis

Project: 195067-9 - Kokosing - OC3 Railroad TIP Phase 2

Shaft: DS-27

Timestamp: 12/08/20 09:25 (17h:53m)

Adjustments Applied: Top (yes) Bottom (yes) Mid-Shaft (no)

Elevation (ft)	Wire 1 Radius (in)	Wire 2 Radius (in)	Wire 3 Radius (in)	Wire 4 Radius (in)	Effective Average Radius(in)
690.5	26.0	26.8	26.8	26.8	26.6
689.5	26.3	26.7	26.9	26.7	26.6
688.5	26.4	26.6	26.8	26.8	26.7
687.5	26.4	26.5	26.8	26.4	26.5
686.5	26.7	26.8	26.5	26.4	26.6
685.5	27.0	27.1	26.9	26.7	26.9
684.5	27.0	27.3	27.2	26.9	27.1
683.5	27.1	27.5	27.6	26.9	27.3
682.5	27.2	27.6	28.0	27.1	27.4
681.5	27.3	27.5	27.7	27.3	27.5
680.5	27.4	27.8	28.0	27.2	27.6
679.5	27.2	27.9	27.8	27.3	27.6
678.5	27.0	28.2	27.9	27.2	27.5
677.5	26.9	28.1	27.6	27.2	27.5
676.5	26.4	27.7	27.6	26.7	27.1
675.5	26.1	27.2	27.2	26.6	26.8
674.5	25.8	26.9	26.9	26.4	26.5
673.5	25.2	26.6	26.4	26.2	26.1
672.5	25.0	26.2	26.4	26.1	25.9
671.5	24.5	25.8	26.0	25.6	25.5
670.5	24.4	25.0	25.6	25.0	25.0
669.5	23.8	24.5	25.2	24.9	24.6
668.5	24.1	24.3	24.9	25.0	24.6
667.5	23.9	24.7	24.7	24.8	24.5
666.5	23.7	24.3	24.2	24.5	24.2
665.5	23.3	23.9	24.6	25.2	24.3

TIP-R Results - Radius Reduction Analysis

Project: 195067-9 - Kokosing - OC3 Railroad TIP Phase 2
Shaft: DS-27
Timestamp: 12/08/20 09:25 (17h:53m)

Adjustments Applied: Top (yes) Bottom (yes) Mid-Shaft (no)

Elevation (ft)	Design Radius (in)	Effective Radius (in)	Radius Reduction % > 6.00%
690.5	24.0	26.6	
689.5	24.0	26.6	
688.5	24.0	26.7	
687.5	24.0	26.5	
686.5	24.0	26.6	
685.5	24.0	26.9	
684.5	24.0	27.1	
683.5	24.0	27.3	
682.5	24.0	27.4	
681.5	24.0	27.5	
680.5	24.0	27.6	
679.5	24.0	27.6	
678.5	24.0	27.5	
677.5	24.0	27.5	
676.5	24.0	27.1	
675.5	24.0	26.8	
674.5	24.0	26.5	
673.5	24.0	26.1	
672.5	24.0	25.9	
671.5	24.0	25.5	
670.5	24.0	25.0	
669.5	24.0	24.6	
668.5	24.0	24.6	
667.5	24.0	24.5	
666.5	24.0	24.2	
665.5	24.0	24.3	

TIP-R Results - TOS/BOS Adjustments

Project: 195067-9 - Kokosing - OC3 Railroad TIP Phase 2
Shaft: DS-27
Timestamp: 12/08/20 09:25 (17h:53m)

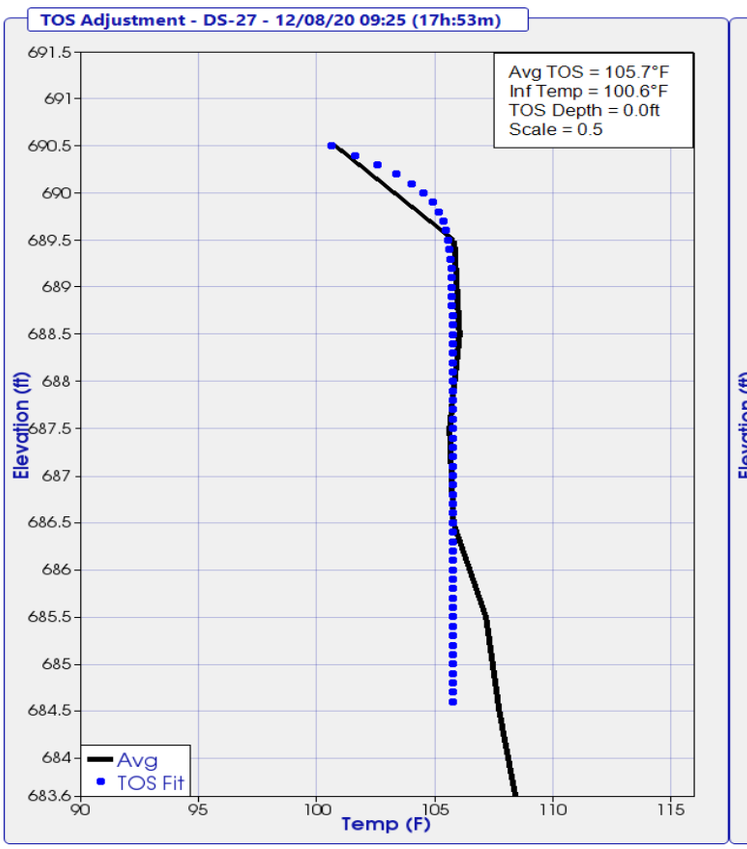

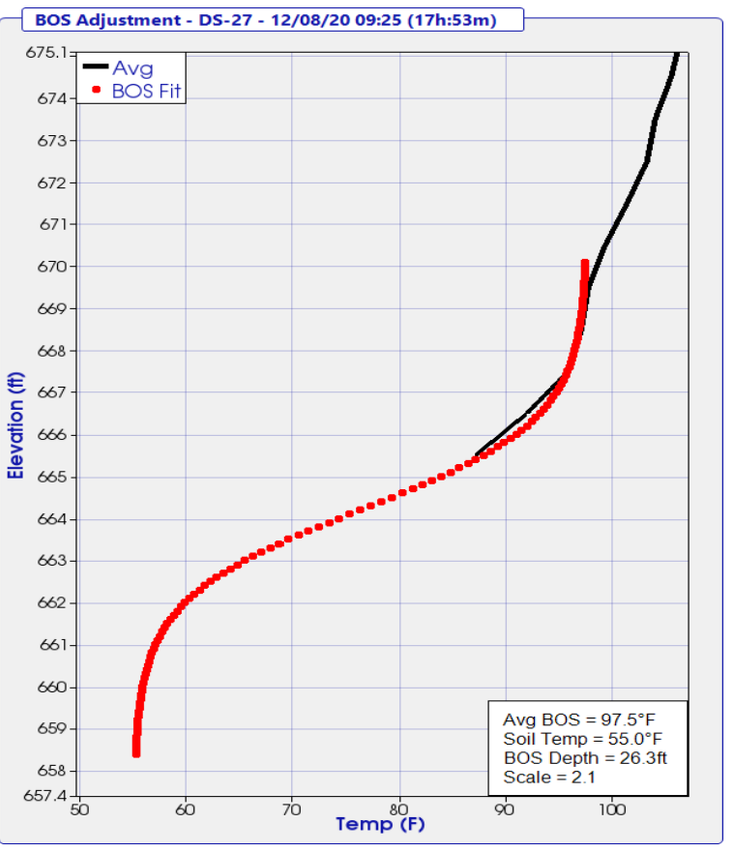

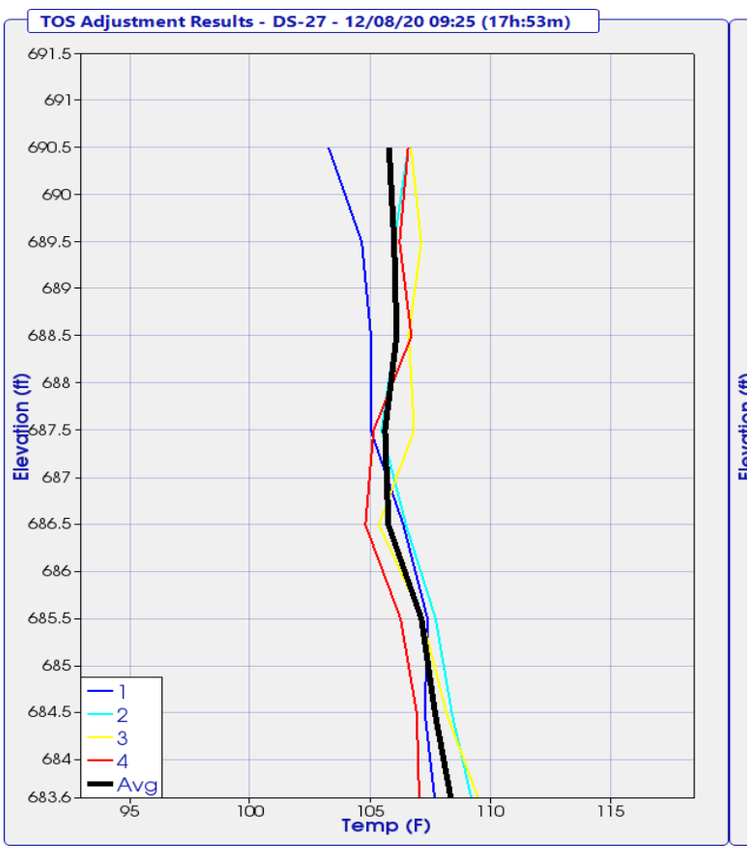

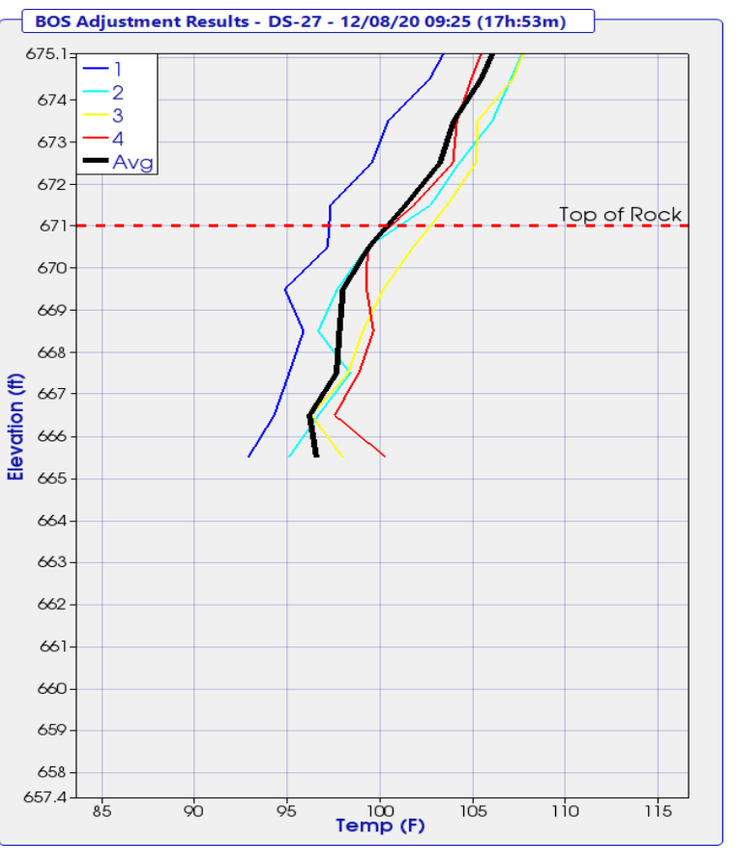

THERMAL FIELD LOG

Project: OC3
Pier No.: Rear Abut

Date Placed: 12/7/2020
Shaft No.: 0527

N

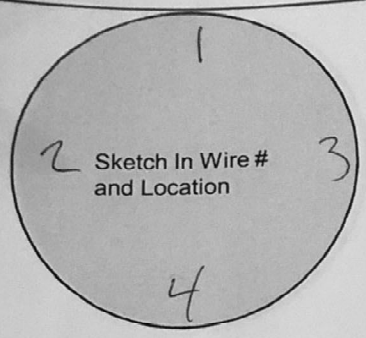

Wire #	Serial #	Wire Length (#nodes)	Nodes Above Concrete	Wire Tested After Install
1	17472	35		Yes
2	17710	↓		↓
3	17527	↓		↓
4	17708	↓		↓

Designate Northerly wire as #1

Wire-Wire Distance		
1-3 ____ in.	2-3 ____ in.	4-3 ____ in.
2-1 ____ in.	4-1 ____ in.	

Shaft Information	Design	As-Built
Shaft Dia.	____ in.	50 in.
Shaft Length	____ ft.	26.26 ft.
Concrete Vol.	____ cy.	14 cy.
Cage Length	____ ft.	26 ft.
Cage Dia.	____ in.	____ in.
Casing Dia. (perm./temp.)	____ in.	____ in.
Casing Length	____ ft.	____ ft.
Rock Socket Dia.	____ in.	____ in.
Rock Socket Length	____ ft.	6.75 ft.

Elevation

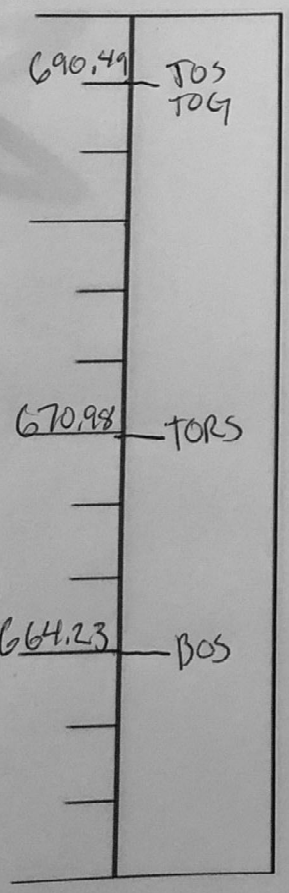

* indicate changes in diameter

Field Notes:

Start of Placement -

End of Placement -

Placement Method -

Legend

TOC	Top of Casing	BOC	Bottom of Casing
TOG	Top of Ground	BORC	Bottom of Reinf. Cage
TOS	Top of Shaft	BOS	Bottom of Shaft
TORS	Top of Rock Socket	▼	Water Level

Completed By: Adam Hale

Please Submit with Concrete Placement Log and Installation Record

4 Wire - Shaft

TIP-R Results - Temperature Analysis Tools

Project: 195067-9 - Kokosing - OC3 Railroad TIP Phase 2
Shaft: DS-28
Timestamp: 12/11/20 09:17 (19h:33m)

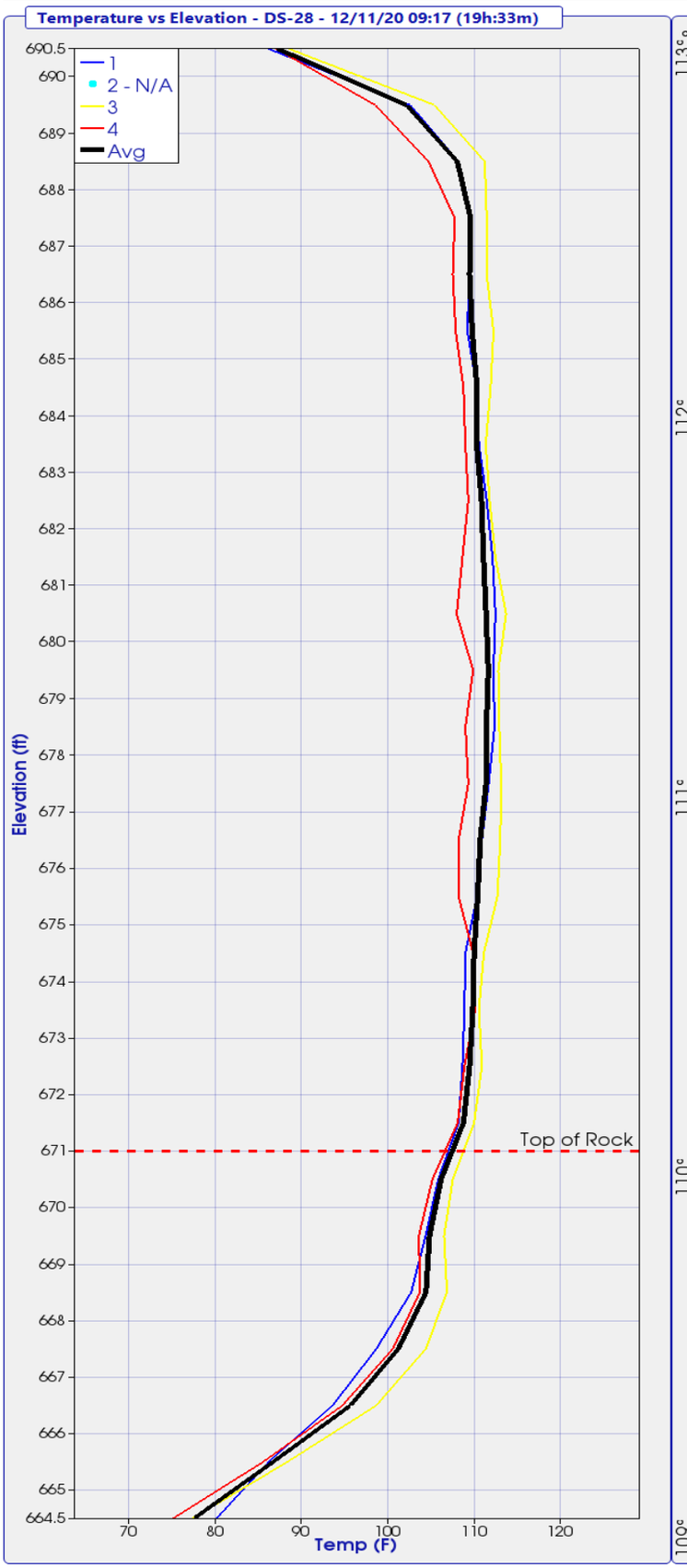

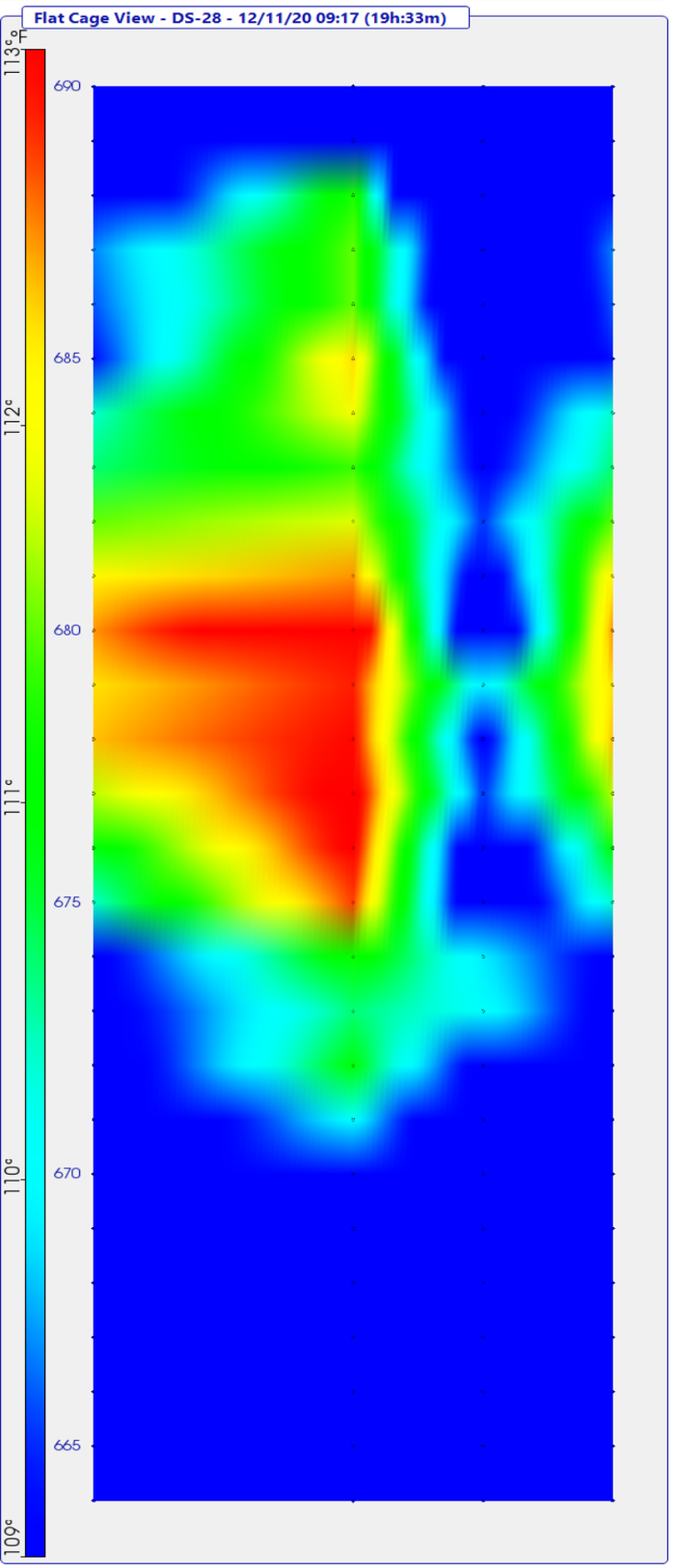

TIP-R Results - Radius Analysis Tools

Project: 195067-9 - Kokosing - OC3 Railroad TIP Phase 2
Shaft: DS-28
Timestamp: 12/11/20 09:17 (19h:33m)

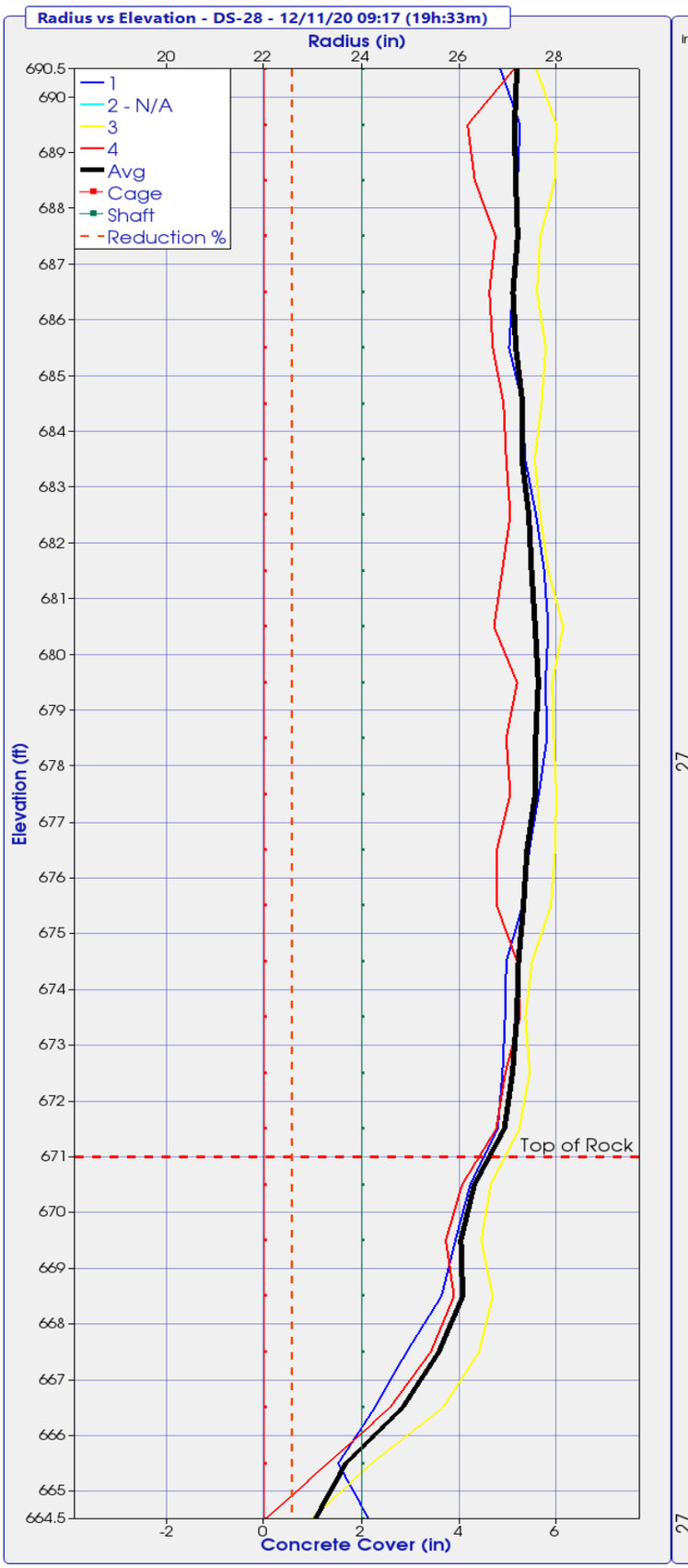

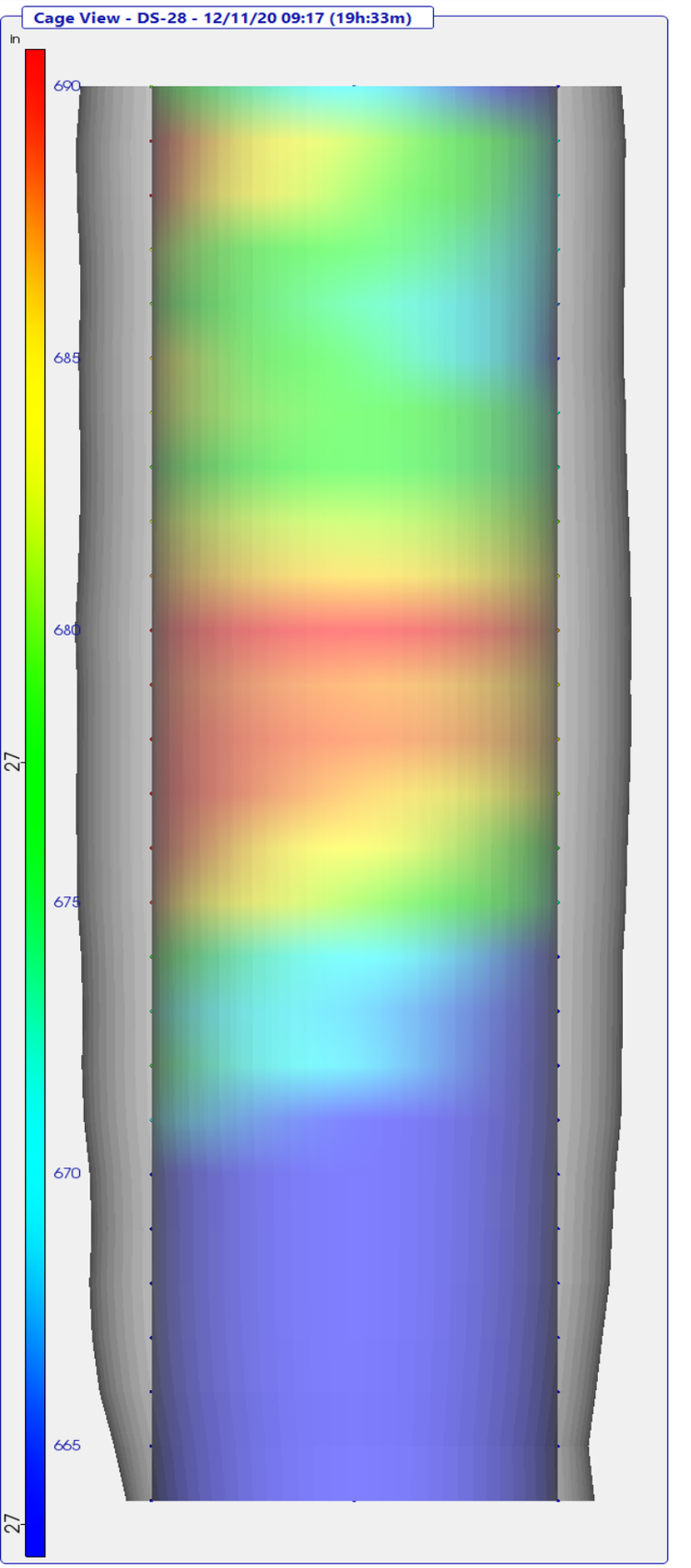

TIP-R Results - Radius Location Analysis

Project: 195067-9 - Kokosing - OC3 Railroad TIP Phase 2
Shaft: DS-28
Timestamp: 12/11/20 09:17 (19h:33m)

Adjustments Applied: Top (yes) Bottom (yes) Mid-Shaft (no)

Elevation (ft)	Wire 1 Radius (in)	Wire 2 Radius (in)	Wire 3 Radius (in)	Wire 4 Radius (in)	Effective Average Radius(in)
690.5	26.8		27.6	27.1	27.2
689.5	27.2		28.0	26.2	27.1
688.5	27.2		28.0	26.3	27.2
687.5	27.2		27.7	26.7	27.2
686.5	27.1		27.6	26.6	27.1
685.5	27.0		27.8	26.7	27.2
684.5	27.3		27.7	26.9	27.3
683.5	27.4		27.6	27.0	27.3
682.5	27.6		27.7	27.0	27.4
681.5	27.7		27.8	26.9	27.5
680.5	27.8		28.1	26.7	27.6
679.5	27.8		27.9	27.2	27.6
678.5	27.8		27.9	27.0	27.6
677.5	27.6		28.0	27.0	27.6
676.5	27.4		28.0	26.8	27.4
675.5	27.3		27.9	26.8	27.3
674.5	27.0		27.5	27.2	27.2
673.5	26.9		27.4	27.2	27.2
672.5	26.9		27.4	26.9	27.1
671.5	26.8		27.2	26.8	26.9
670.5	26.2		26.6	26.1	26.3
669.5	25.9		26.5	25.7	26.0
668.5	25.6		26.7	25.9	26.1
667.5	24.9		26.4	25.4	25.6
666.5	24.3		25.7	24.6	24.8
665.5	23.5		24.2	23.3	23.7
664.5	24.1		23.0	22.0	23.0

TIP-R Results - Radius Reduction Analysis

Project: 195067-9 - Kokosing - OC3 Railroad TIP Phase 2
Shaft: DS-28
Timestamp: 12/11/20 09:17 (19h:33m)

Adjustments Applied: Top (yes) Bottom (yes) Mid-Shaft (no)

Elevation (ft)	Design Radius (in)	Effective Radius (in)	Radius Reduction % > 6.00%
690.5	24.0	27.2	
689.5	24.0	27.1	
688.5	24.0	27.2	
687.5	24.0	27.2	
686.5	24.0	27.1	
685.5	24.0	27.2	
684.5	24.0	27.3	
683.5	24.0	27.3	
682.5	24.0	27.4	
681.5	24.0	27.5	
680.5	24.0	27.6	
679.5	24.0	27.6	
678.5	24.0	27.6	
677.5	24.0	27.6	
676.5	24.0	27.4	
675.5	24.0	27.3	
674.5	24.0	27.2	
673.5	24.0	27.2	
672.5	24.0	27.1	
671.5	24.0	26.9	
670.5	24.0	26.3	
669.5	24.0	26.0	
668.5	24.0	26.1	
667.5	24.0	25.6	
666.5	24.0	24.8	
665.5	24.0	23.7	
664.5	24.0	23.0	

TIP-R Results - TOS/BOS Adjustments

Project: 195067-9 - Kokosing - OC3 Railroad TIP Phase 2
Shaft: DS-28
Timestamp: 12/11/20 09:17 (19h:33m)

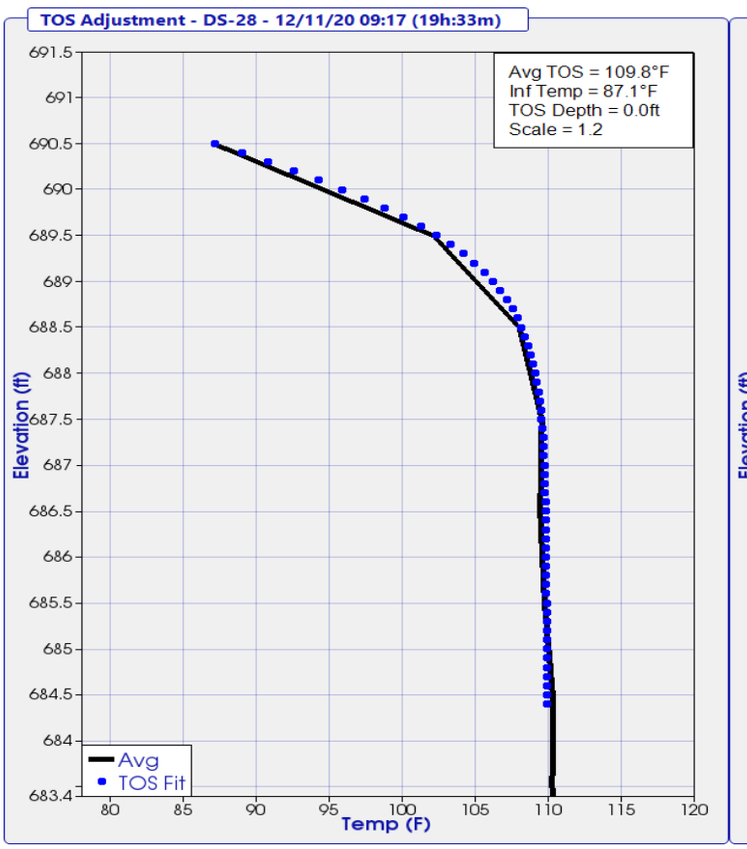

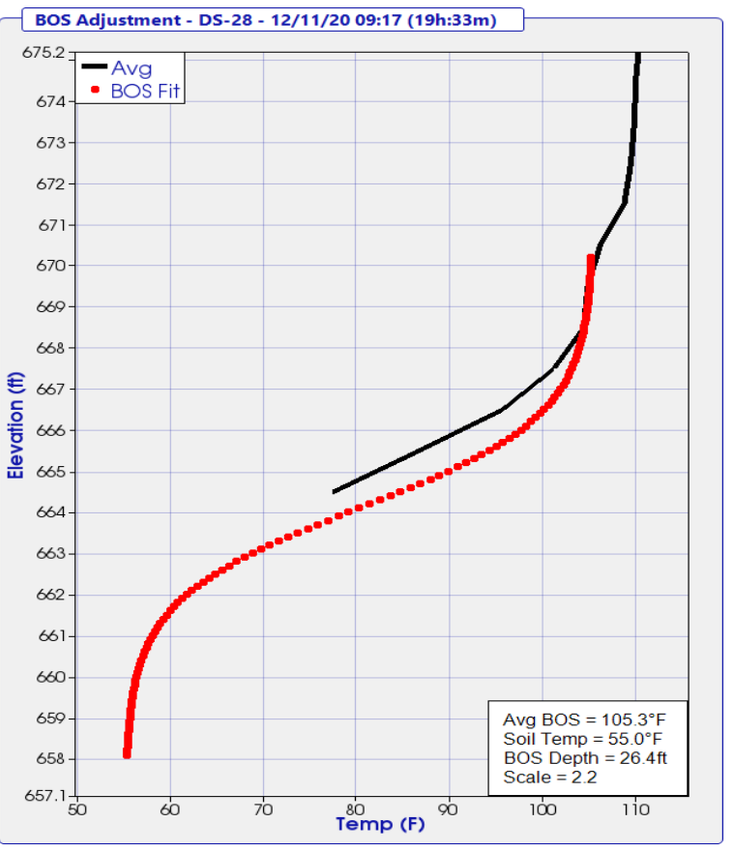

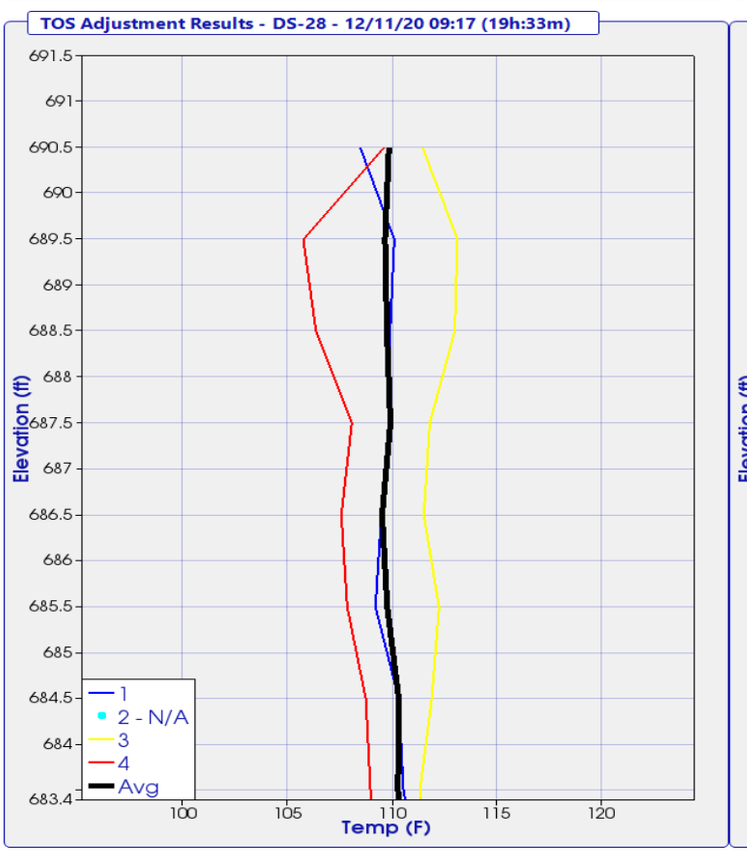

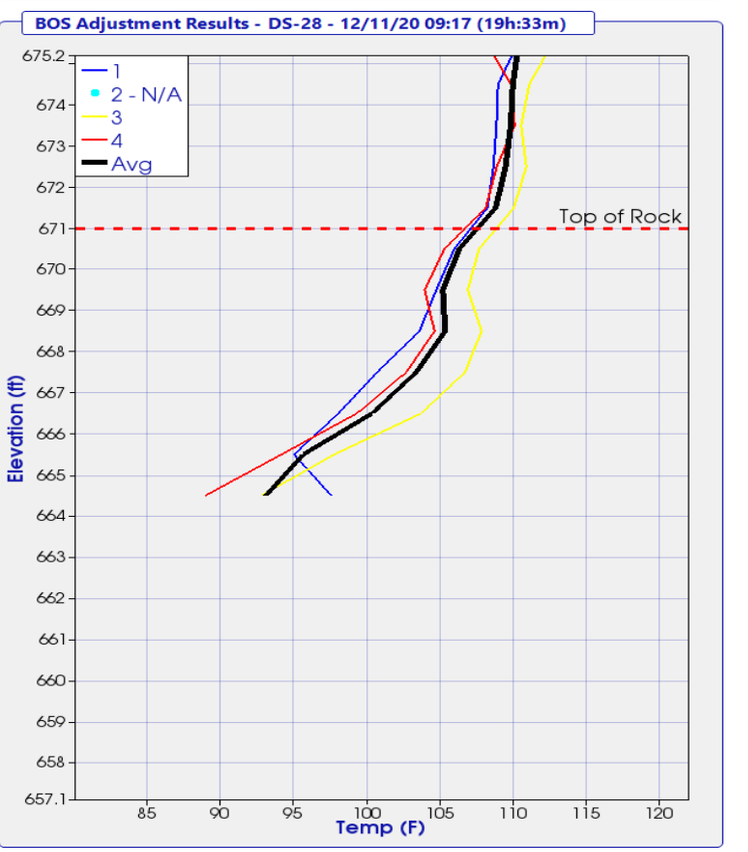

THERMAL FIELD LOG

Project: OL3
Pier No.: Rear Abut
Date Placed: 12/10/2020
Shaft No.: 0528

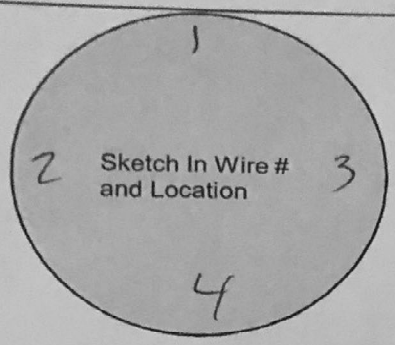

Wire #	Serial #	Wire Length (#nodes)	Nodes Above Concrete	Wire Tested After Install
1	59634	40		Yes
2	59631	↓		↓
3	59632			
4	59633			

Designate Northerly wire as #1

Wire-Wire Distance		
1-3 ____ in.	2-3 ____ in.	4-3 ____ in.
2-1 ____ in.	4-1 ____ in.	

Shaft Information	Design	As-Built
Shaft Dia.	____ in.	56 in.
Shaft Length	____ ft.	26.44 ft.
Concrete Vol.	____ cy.	14 cy.
Cage Length	____ ft.	26 ft.
Cage Dia.	____ in.	____ in.
Casing Dia. (perm./temp.)	____ in.	____ in.
Casing Length	____ ft.	____ ft.
Rock Socket Dia.	____ in.	____ in.
Rock Socket Length	____ ft.	6.9 ft.

Elevation

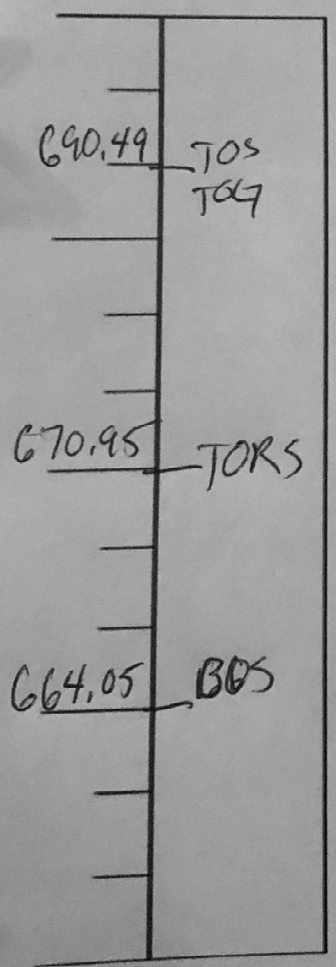

*** indicate changes in diameter**

Field Notes:

Start of Placement -

End of Placement -

Placement Method -

Legend

TOC	Top of Casing	BOC	Bottom of Casing
TOG	Top of Ground	BORC	Bottom of Reinf. C
TOS	Top of Shaft	BOS	Bottom of Shaft
TORS	Top of Rock Socket	▼	Water Level

Completed By: [signature]

Please Submit with Concrete Placement Log and Installation Record

4 V

RA SOLE PLATE THICKNESS			
Girder #	A (IN)	B (IN)	C (IN)
G1 & G2	1-27/32"	1-25/32"	1-23/32"
G3 & G4	1-13/16"	1-3/4"	1-11/16"
G5 & G6	1-25/32"	1-23/32"	1-21/32"
G7 & G8	1-3/4"	1-11/16"	1-5/8"
G9 & G10	1-23/32"	1-21/32"	1-19/32"
G11 & G12	1-11/16"	1-5/8"	1-9/16"
G13 & G14	1-21/32"	1-19/32"	1-17/32"
G15 & G16	1-5/8"	1-9/16"	1-1/2"
G17 & G18	1-5/8"	1-9/16"	1-1/2"

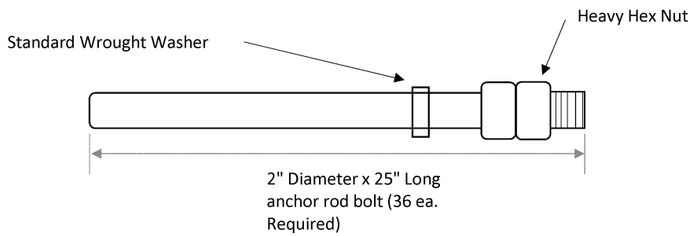

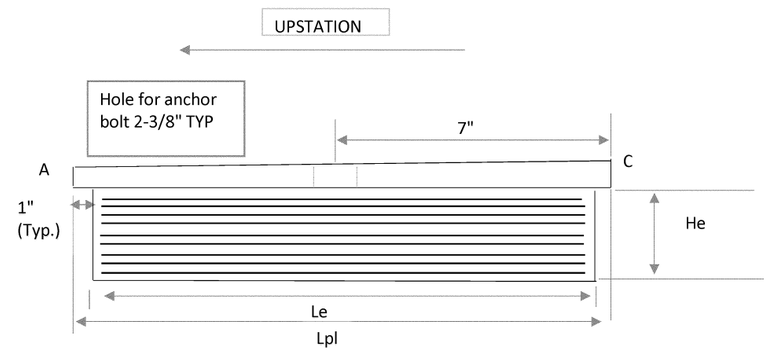

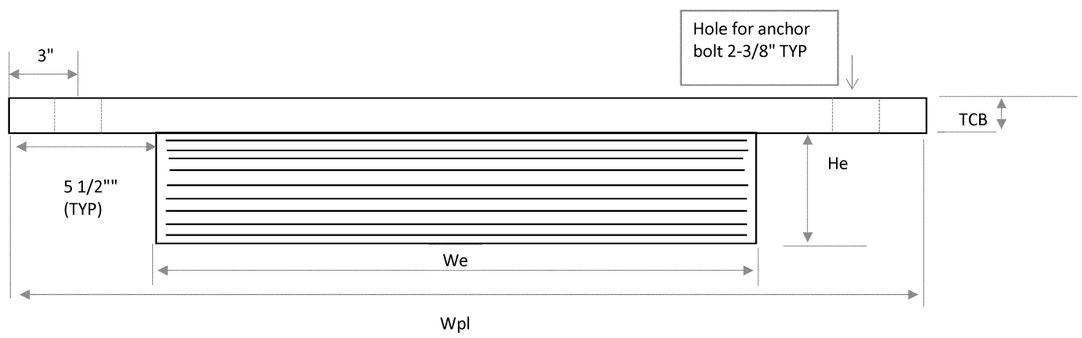

The Fabrication shall be in accordance with the requirements of AREMA 15-5.12. The bearings were designed in accordance with AREMA 15-5.6.

The materials for elastomeric bearings shall conform to the requirements of AREME 15-5.6. The elastomeric compound shall be a 60 durometer virgin crystallization-resistant polychloroprene (Neoprene). Steel reinforcement shall be mild steel conforming to ASTM A1011.

The steel sole plate shall be ASTM A36 steel. Anchor rods shall be ASTM F1554, grade 105. Nuts shall conform to ASTM A563 for appropriate grade and size of anchor bolt. Washers shall conform to ASTM F436.

The steel sole plate shall be painted per CMS 514 Additionally, in accordance with CMS 514 and ODOT Qualified Products List, shop primed using Dimetcote 9. Control welding of the sole plate to the superstructure so that the plate temperature at the elastomer bonded surface does not exceed 300 deg f as determined by the use of pyrometric sticks or other temperature monitoring devices.The steel sole plate shall be bonded by vulcanization to the elastomer during the molding process.

Each bearing assembly shall be shop marked with the following information: Top, forward station direction, location (FA or RA), and beam number. All bearings shall be marked prior to shipping. The marks shall include the bearing location on the bridge, and a direction arrow that points up-station. All marks shall be permanent and be visible after the bearing is installed. the acceptance criteria for all bearings shall meet the requirements of test criteria I as specified in AREMA 15-5.12.9

P =Number of Steel Laminates per Bearing
t= steel laminate thickness = 1/16"
te = external elastomer layer thickness (2 ea.)
ti = internal elastomer layer thickness (8 ea.)

BEARING LOCATION	NO. REQ'D	Le	We	He	te	ti	P	Lpl	Wpl	TCB	BOLTS				
Rear Abut	18	12"	24"	3 15/16"	3/16"	3/8"	9	14"	35"	SEE CHART	36				

BRIDGE COMPONENTS INDUSTRIES, LLC

CONTRACTOR:	Kokosing
COUNTY:	Cuyahoga
Bridge #:	CUY-010-2039
PROJECT:	NORFOLK SOUTHERN RAILROAD OVER OH-10
Date:	12/6/2019
Drawing Number	BRONOR
Page	1 of 4

FA SOLE PLATE THICKNESS			
Girder #	A (IN)	B (IN)	C (IN)
G19 & G20	1-25/32"	1-25/32"	1-25/32"
G21 & G22	1-3/4"	1-3/4"	1-3/4"
G23 & G24	1-23/32"	1-23/32"	1-23/32"
G25 & G26	1-11/16"	1-11/16"	1-11/16"
G27 & G28	1-21/32"	1-21/32"	1-21/32"
G29 & G30	1-5/8"	1-5/8"	1-5/8"
G31 & G32	1-19/32"	1-19/32"	1-19/32"
G33 & G34	1-9/16"	1-9/16"	1-9/16"
G35 & G36	1-17/32"	1-17/32"	1-17/32"

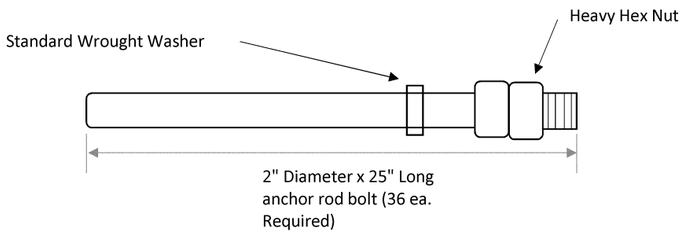

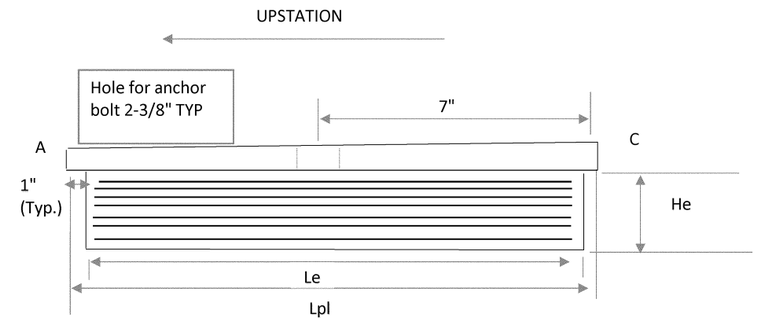

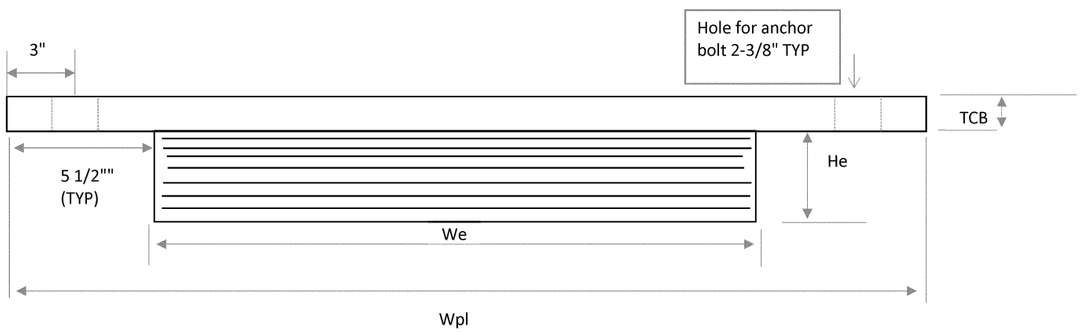

The Fabrication shall be in accordance with the requirements of AREMA 15-5.12. The bearings were designed in accordance with AREMA 15-5.6.

The materials for elastomeric bearings shall conform to the requirements of AREME 15-5.6. The elastomeric compound shall be a 60 durometer virgin crystallization-resistant polychloroprene (Neoprene). Steel reinforcement shall be mild steel conforming to ASTM A1011.

The steel sole plate shall be ASTM A36 steel. Anchor rods shall be ASTM F1554, grade 105. Nuts shall conform to ASTM A563 for appropriate grade and size of anchor bolt. Washers shall conform to ASTM F436.

The steel sole plate shall be painted per CMS 514 Additionally, in accordance with CMS 514 and ODOT Qualified Products List, shop primed using Dimetcote 9 . Control welding of the sole plate to the superstructure so that the plate temperature at the elastomer bonded surface does not exceed 300 deg f as determined by the use of pyrometric sticks or other temperature monitoring devices.The steel Sole plate shall be bonded by vulcanization to the elastomer during the molding process.

Each bearing assembly shall be shop marked with the following information: Top, forward station direction, location (FA or RA), and beam number. All bearings shall be marked prior to shipping. The marks shall include the bearing location on the bridge, and a direction arrow that points up-station. All marks shall be permanent and be visible after the bearing is installed. the acceptance criteria for all bearings shall meet the requirements of test criteria I as specified in AREMA 15-5.12.9

P =Number of Steel Laminates per Bearing
t= steel laminate thickness = 1/16"
te = external elastomer layer thickness (2 ea.)
ti = internal elastomer layer thickness (8 ea.)

BEARING LOCATION	NO. REQ'D	Le	We	He	te	ti	P	Lpl	Wpl	TCB	BOLTS				
FWD Abut	18	12"	22"	3 1/16"	3/16"	3/8"	7	14"	33"	SEE CHART	36				

BRIDGE COMPONENTS INDUSTRIES, LLC

CONTRACTOR:	Kokosing
COUNTY:	Cuyahoga
Bridge #:	CUY-010-2039
PROJECT:	NORFOLK SOUTHERN RAILROAD OVER OH-10
Date:	12/6/2019
Drawing Number	BRONOR
Page	2of 4

PIER SPAN 1 SOLE PLATE THICKNESS			
Girder #	A (IN)	B (IN)	C (IN)
G1 & G2	1-25/32"	1-25/32"	1-25/32"
G3 & G4	1-3/4"	1-3/4"	1-3/4"
G5 & G6	1-23/32"	1-23/32"	1-23/32"
G7 & G8	1-11/16"	1-11/16"	1-11/16"
G9 & G10	1-21/32"	1-21/32"	1-21/32"
G11 & G12	1-5/8"	1-5/8"	1-5/8"
G13 & G14	1-19/32"	1-19/32"	1-19/32"
G15 & G16	1-9/16"	1-9/16"	1-9/16"
G17 & G18	1-17/32"	1-17/32"	1-17/32"

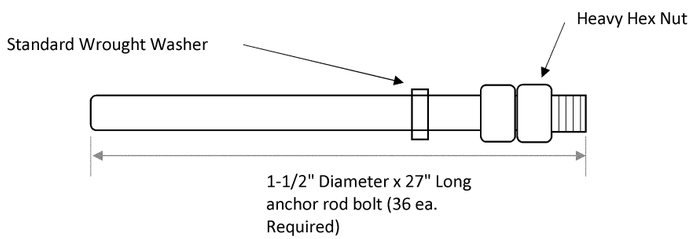

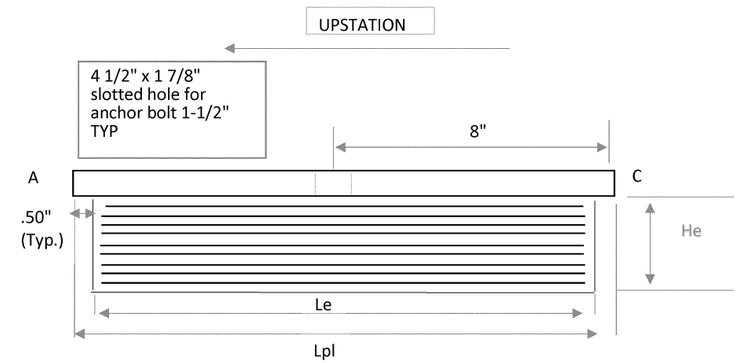

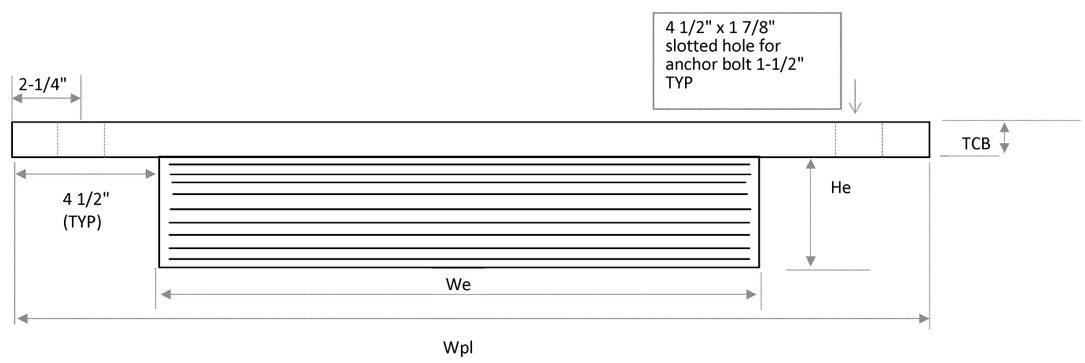

The Fabrication shall be in accordance with the requirements of AREMA 15-5.12. The bearings were designed in accordance with AREMA 15-5.6.

The materials for elastomeric bearings shall conform to the requirements of AREME 15-5.6. The elastomeric compound shall be a 60 durometer virgin crystallization-resistant polychloroprene (Neoprene). Steel reinforcement shall be mild steel conforming to ASTM A1011.

The steel sole plate shall be ASTM A36 steel. Anchor rods shall be ASTM F1554, grade 105. Nuts shall conform to ASTM A563 for appropriate grade and size of anchor bolt. Washers shall conform to ASTM F436.

The steel sole plate shall be painted per CMS 514. Additionally, in accordance with CMS 514 and ODOT Qualified Products List, shop primed using Dimetcote 9. Control welding of the sole plate to the superstructure so that the plate temperature at the elastomer bonded surface does not exceed 300 deg f as determined by the use of pyrometric sticks or other temperature monitoring devices.The steel Sole plate shall be bonded by vulcanization to the elastomer during the molding process.

Each bearing assembly shall be shop marked with the following information: Top, forward station direction, location (Pier span 1), and beam number. All bearings shall be marked prior to shipping. The marks shall include the bearing location on the bridge, and a direction arrow that points up-station. All marks shall be permanent and be visible after the bearing is installed. the acceptance criteria for all bearings shall meet the requirements of test criteria I as specified in AREMA 15-5.12.9

P =Number of Steel Laminates per Bearing
t= steel laminate thickness = 1/16"
te = external elastomer layer thickness (2 ea.)
ti = internal elastomer layer thickness (8 ea.)

BEARING LOCATION	NO. REQ'D	Le	We	He	te	ti	P	Lpl	Wpl	TCB	BOLTS				
PIER SPAN 1	18	15"	24"	4 5/16"	1/8"	7/16"	9	16"	33"	SEE CHART	36				

BRIDGE COMPONENTS INDUSTRIES, LLC

CONTRACTOR:	Kokosing
COUNTY:	Cuyahoga
Bridge #:	CUY-010-2039
PROJECT:	NORFOLK SOUTHERN RAILROAD OVER OH-10
Date:	12/6/2019
Drawing Number	BRONOR
Page	3 of 4

PIER SPAN 1 SOLE PLATE THICKNESS			
Girder #	A (IN)	B (IN)	C (IN)
G19 & G20	2-15/32"	2-13/32"	2-11/32"
G21 & G22	2-7/16"	2-3/8"	2-5/16"
G23 & G24	2-13/32"	2-11/32"	2-9/32"
G25 & G26	2-3/8"	2-5/16"	2-1/4"
G27 & G28	2-11/32"	2-9/32"	2-7/32"
G29 & G30	2-5/16"	2-1/4"	2-3/16"
G31 & G32	2-9/32"	2-7/32"	2-5/32"
G33 & G34	2-1/4"	2-3/16"	2-1/8"
G35 & G36	2-7/32"	2-5/32"	2-3/32"

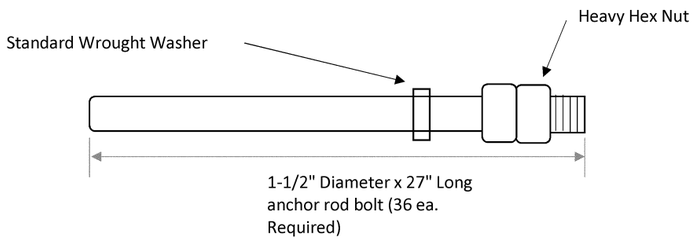

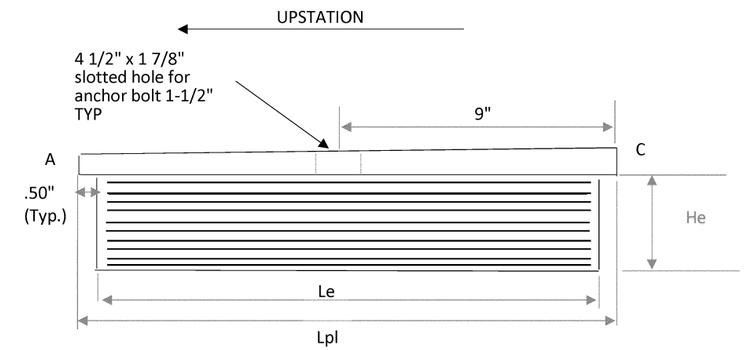

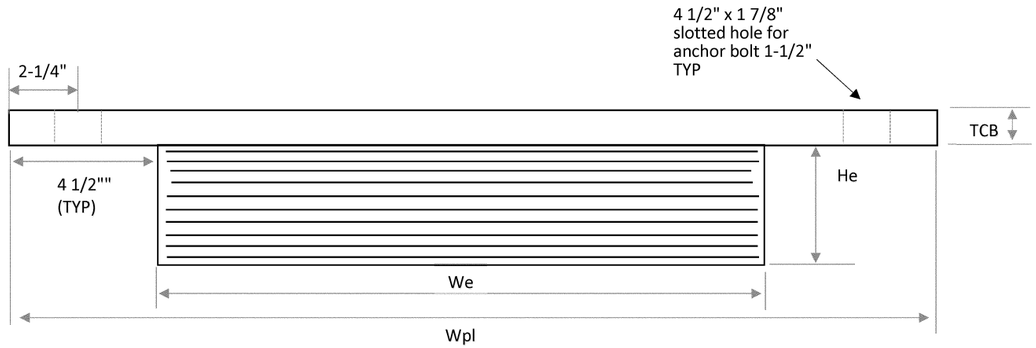

The Fabrication shall be in accordance with the requirements of AREMA 15-5.12. The bearings were designed in accordance with AREMA 15-5.6.

The materials for elastomeric bearings shall conform to the requirements of AREME 15-5.6. The elastomeric compound shall be a 60 durometer virgin crystallization-resistant polychloroprene (Neoprene). Steel reinforcement shall be mild steel conforming to ASTM A1011.

The steel sole plate shall be ASTM A36 steel. Anchor rods shall be ASTM F1554, grade 105. Nuts shall conform to ASTM A563 for appropriate grade and size of anchor bolt. Washers shall conform to ASTM F436.

The steel sole plate shall be painted per CMS 514 Additionally, in accordance with CMS 514 and ODOT Qualified Products List, shop primed using Dimetcote 9 . Control welding of the sole plate to the superstructure so that the plate temperature at the elastomer bonded surface does not exceed 300 deg f as determined by the use of pyrometric sticks or other temperature monitoring devices.The steel Sole plate shall be bonded by vulcanization to the elastomer during the molding process.

Each bearing assembly shall be shop marked with the following information: Top, forward station direction, location (Span 2 Pier), and beam number. All bearings shall be marked prior to shipping. The marks shall include the bearing location on the bridge, and a direction arrow that points up-station. All marks shall be permanent and be visible after the bearing is installed. the acceptance criteria for all bearings shall meet the requirements of test criteria I as specified in AREMA 15-5.12.9

P =Number of Steel Laminates per Bearing
t= steel laminate thickness = 1/16"
te = external elastomer layer thickness (2 ea.)
ti = internal elastomer layer thickness (8 ea.)

BEARING LOCATION	NO. REQ'D	Le	We	He	te	ti	P	Lpl	Wpl	TCB	BOLTS				
PIER SPAN 2	18	17"	24"	5 1/2"	3/16"	1/2"	10	18"	33"	SEE CHART	36				

BRIDGE COMPONENTS INDUSTRIES, LLC

CONTRACTOR:	Kokosing
COUNTY:	Cuyahoga
Bridge #:	CUY-010-2039
PROJECT:	NORFOLK SOUTHERN RAILROAD OVER OH-10
Date:	12/6/2019
Drawing Number	BRONOR
Page	4 of 4

GENERAL NOTES

SPECIFICATIONS:

1 CONSTRUCTION OF THIS STRUCTURE SHALL CONFORM TO:
- OHIO DEPARTMENT OF TRANSPORTATION "CONSTRUCTION AND MATERIAL SPECIFICATIONS" DATED JANUARY 01, 2016.
- SUPPLEMENTAL SPECIFICATIONS, AS INDICATED ON PROJECT PLANS.
- NSRR-PPM APPENDIX H.4.1 - "SPECIFICATIONS FOR STRUCTURAL STEEL"
- AREMA SPECIFICATIONS, CHAPTER 15, CURRENT EDITION.

2 ANSI/AASHTO/AWS "BRIDGE WELDING CODE, D1.5" CURRENT EDITION, AS MODIFIED BY AREMA CHAPTER 15 & NSRR-PPM.

3 MATERIAL, FABRICATION AND WORKMANSHIP SHALL BE IN ACCORDANCE WITH:
- OHIO DEPARTMENT OF TRANSPORTATION "CONSTRUCTION AND MATERIAL SPECIFICATIONS" DATED JANUARY 01, 2016 AND CITY OF COLUMBUS CONSTRUCTION AND MATERIAL SPECIFICATIONS, 2012 EDITION.
- SUPPLEMENTAL SPECIFICATIONS, AS INDICATED ON THE PROJECT PLANS.
- NSRR-PPM APPENDIX H.4.1 - "SPECIFICATIONS FOR STRUCTURAL STEEL"
- AREMA SPECIFICATIONS, CHAPTER 15, CURRENT EDITION.

MATERIAL:

1 ALL STRUCTURAL STEEL SHALL BE ASTM A709 GR 50.

2 MATERIAL, FABRICATION AND WORKMANSHIP SHALL BE IN ACCORDANCE WITH:
- OHIO DEPARTMENT OF TRANSPORTATION "CONSTRUCTION AND MATERIAL SPECIFICATIONS" DATED JANUARY 01, 2016.
- SUPPLEMENTAL SPECIFICATIONS, AS INDICATED ON PROJECT PLANS.
- NSRR-PPM APPENDIX H.4.1 - "SPECIFICATIONS FOR STRUCTURAL STEEL"
- AREMA SPECIFICATIONS, CHAPTER 15, CURRENT EDITION.

3 STRUCTURAL STEEL NOTED "T2", OR "CVN" INDICATES MATERIAL WHICH IS TO BE SUBJECT TO CHARPY V NOTCH TESTING, IN ACCORDANCE WITH AREMA TABLE 15-1-2, NOTE 1, AS FOLLOWS: (FABRICATOR IS CERTIFIED UNDER THE AISC QUALITY CERTIFICATION PROGRAM AS FOLLOWS: FOR WELDED PLATE GIRDERS - MAJOR STEEL BRIDGE CATEGORY)

ASTM A709 GR. 50:
- 15 FT-LB @ 40 DEGREE F <= 2" THICK WELDED.
- 20 FT-LB @ 40 DEGREE F > 2" THICK WELDED.
- CVN TESTING TO BE "H" FREQUENCY.
- MATERIAL TO MEET THE FOLLOWING SUPPLEMENTARY REQUIREMENTS:
  - S29 (FINE AUSTENITIC GRAIN SIZE)

4 STRUCTURAL STEEL NOTED "F2", OR "FCM-2" INDICATES MATERIAL WHICH IS TO BE SUBJECT TO CHARPY V NOTCH TESTING, IN ACCORDANCE WITH AREMA TABLE 15-1-14, NOTE 1, AS FOLLOWS: (FABRICATOR IS CERTIFIED UNDER THE AISC QUALITY CERTIFICATION PROGRAM AS FOLLOWS: FOR WELDED PLATE GIRDERS - MAJOR STEEL BRIDGE CATEGORY; FOR ROLLED BEAM BRIDGES - SIMPLE STEEL BRIDGE STRUCTURES CATEGORY)

ASTM A709 GR. 50:
- 25 FT-LB @ 40 DEGREE F <= 2" THICK WELDED.
- 30 FT-LB @ 40 DEGREE F > 2" THICK WELDED.
- CVN TESTING TO BE "P" FREQUENCY, EXCEPT AS INDICATED OTHERWISE BY AREMA TABLE 15-1-14, NOTE 1.
- MATERIAL TO MEET THE FOLLOWING SUPPLEMENTARY REQUIREMENTS:
  - S29 (FINE AUSTENITIC GRAIN SIZE)
  - S93 (LIMITATIONS ON WELD REPAIRS)

5 IF THE YIELD POINT OF THE STRUCTURAL PRODUCT EXCEEDS 65 KSI, THE TESTING TEMPERATURE FOR THE MINIMUM AVERAGE ENERGY AND MINIMUM TEST VALUE ENERGY REQUIRED SHALL BE REDUCED BY 15° F FOR EACH INCREMENT OF 10 KSI ABOVE 65 KSI. THE YIELD POINT IS THE VALUE GIVEN IN THE TEST REPORT.

6 FOR ALL OTHER STEEL NOT INDICATED ABOVE, FABRICATOR IS CERTIFIED UNDER THE AISC QUALITY CERTIFICATION PROGRAM AS FOLLOWS: FOR ROLLED BEAM BRIDGES - SIMPLE STEEL BRIDGE STRUCTURES CATEGORY.

7 ALL BOLTS TO BE HEAVY HEX ASTM F3125 GRADE A325 1" DIA. & 7/8" DIA. TYPE 1, MECH. GALV.
ALL HEAVY HEX NUTS TO BE ASTM A563. (GALVANIZED)
ALL HARDENED FLAT WASHERS TO BE ASTM F436. (GALVANIZED)

8 ALL BOLTS TO BE INSTALLED AND TORQUED USING THE TURN OF NUT METHOD. TENSION CONTROL BOLTS ARE NOT PERMITTED.

9 ALL HIGH STRENGTH BOLTS SHALL BE ROTATIONAL CAPACITY TESTED PRIOR TO USE. DO NOT MIX BOLTS OR NUTS FROM DIFFERENT LOTS.

10 ALL FIELD HEX NUTS AND PERMANENT SHOP BOLTS (THAT ARE INSTALLED AFTER PRIME PAINTING) SHALL HAVE THE LUBRICANT WAX ONLY APPLIED TO TO THE THREADS AND WASHER FACE.

FABRICATION AND WORKMANSHIP:

1 CLIP CORNERS OF ALL BEARING STIFFENERS, CROSSFRAME CONNECTION PLATES AND INTERMEDIATE STIFFENERS AND TERMINATE WELDS AS INDICATED ON DETAILS AS SHOWN ON SHEET GN2.

2 THE WEIGHTS SHOWN ON DETAIL SHEETS ARE FOR INFORMATIONAL PURPOSES ONLY. VERIFY ALL WEIGHTS PRIOR TO LIFTING AND SHIPPING MEMBERS.

WELDING:

1 ALL WELDING SHALL BE IN ACCORDANCE WITH ANSI/AASHTO/AWS (D1.5-CURRENT EDITION) BRIDGE WELDING CODE, AS MODIFIED BY AREMA CHAPTER 15 AND NSRR-PPM.

2 ALL WELD INSPECTIONS TO BE IN ACCORDANCE WITH OHIO DEPARTMENT OF TRANSPORTATION "CONSTRUCTION AND MATERIAL SPECIFICATIONS", DATED JANUARY 01, 2016, AND WITH ANSI/AASHTO/AWS (D1.5-CURRENT EDITION) BRIDGE WELDING CODE, AS MODIFIED BY AREMA CHAPTER 15 AND NSRR-PPM.

3 ONLY SAW AND SMAW WELD PROCEDURES MAY BE USED.

INSPECTION:

1. THE FABRICATOR SHALL FURNISH COPIES OF CERTIFIED MILL INSPECTION REPORTS TO THE RAILROAD FOR ALL STRUCTURAL STEEL REQUIRING IMPROVED NOTCH TOUGHNESS.

2. THE FABRICATOR SHALL MEET THE REQUIREMENTS OF THE AREMA FRACTURE CONTROL PLAN DESCRIBED IN CHAPTER 15, PART 1, ARTICLE 1.14 FOR ALL MEMBERS AND COMPONENTS DESIGNATED AS FRACTURE CONTROL.

3. ALL NON-DESTRUCTIVE TESTING SHALL BE PERFORMED BY THE FABRICATOR AND WITNESSED BY THE RAILROAD'S INSPECTOR.

4. COPIES OF ALL WELD INSPECTIONS AND NON-DESTRUCTIVE TESTING REPORTS SHALL BE FURNISHED TO THE RAILROAD.

5. NONDESTRUCTIVE WELD INSPECTION SHALL BE IN ACCORDANCE WITH CHAPTER 6 OF THE ANSI / AASHTO / AWS D1.5-CURRENT EDITION BRIDGE WELDING CODE, AND WITH SECTION 513.25 OF THE OHIO DEPARTMENT OF TRANSPORTATION "CONSTRUCTION AND MATERIAL SPECIFICATIONS" JANUARY 01, 2016, AS MODIFIED BY AREMA CHAPTER 15 AND NSRR-PPM.

6. "RT" INDICATES RADIOGRAPHIC INSPECTION

7. IN ADDITION, THE FABRICATOR SHALL PERFORM THE FOLLOWING WELD TESTING INSPECTION:

7.1 ALL TRANSVERSE TENSION GROOVE WELDS IN FCM MEMBERS, WHEN ALLOWED BY THE ENGINEER, SHALL BE RT AND UT TESTED 100%. IN NON FCM COMPONENTS OF FCM'S ALL TRANSVERSE GROOVE WELDS SHALL BE RT OR UT TESTED 100%.

7.2 ALL FLANGE TO WEB WELDS SHALL BE TESTED ON BOTH SIDES IN ACCORDANCE WITH AWS D1.5/2013 CLAUSE 6.7.

7.3 ALL FLANGE TO WEB FILLET WELDS , WHEN ALLOWED BY THE ENGINEER, ARE TO MAGNETIC PARTICLE TESTED 100%.

7.4 10% OF ALL WELDS NOT MENTIONED ABOVE SHALL BE MAGNETIC PARTICLE TESTED.

CLEANING AND PAINTING:

1 ALL CLEANING OF STEEL TO BE IN ACCORDANCE WITH OHIO DEPARTMENT OF TRANSPORTATION "CONSTRUCTION AND MATERIAL SPECIFICATIONS", SECTION 514.13, CURRENT EDITION, AND SUPPLEMENTAL SPECIFICATIONS, IF INDICATED, AS SHOWN ON PROJECT PLANS, AS WELL AS IN ACCORDANCE WITH NORFOLK SOUTHERN PAINT SPECIFICATIONS.

2 BLASTING OF ALL STRUCTURAL STEEL TO BE IN ACCORDANCE WITH SSPC-SP10 AND AS SHOWN ON THE PICTORIAL SURFACE PREPARATION STANDARDS FOR PAINTING STEEL SURFACES AS SHOWN IN SSPC-VIS 1, AS WELL AS IN ACCORDANCE WITH NORFOLK SOUTHERN PAINT SPECIFICATIONS.

3 SHOP PAINTING TO BE A PRIME COAT ONLY PAINT SYSTEM PER SECTION 514 OF OHIO DEPARTMENT OF TRANSPORTATION "CONSTRUCTION AND MATERIAL SPECIFICATIONS." (LIMITS AS INDICATED ON GN3) AS WELL AS IN ACCORDANCE WITH NORFOLK SOUTHERN PUBLIC PROJECT MANUAL SECTIONS H.4.4 AND H.4.5. FINISH COAT PAINT COLOR SHALL BE PROVIDED BY THE ENGINEER. (FINAL PAINT BY OTHERS - FIELD APPLIED)
- PRIME COAT DRY FILM THICKNESS SHALL BE 3 - 5 MILS
- PRIME PAINT TO BE PER 708.01 OF ODOT CMS, CURRENT EDITION.
- PAINT TO BE CARBOLINE CARBOZINC 11HS.

STATE OF OHIO
DAVID F. TRAINI
E-48751
REGISTERED
PROFESSIONAL ENGINEER

Dal F. T. 10-24-19

SHOP DRAWING INDEX

DRAWING NO.	DESCRIPTION
GN1	GENERAL NOTES, DRAWING INDEX
GN2	WELDING STANDARD DETAILS
GN3	PAINTING STANDARD DETAILS
E1	FRAMING PLANS, FIELD BOLTS
E2	BRIDGE SECTIONS @ ABUTMENTS & PIERS
E3 THRU E6	BRIDGE SECTIONS @ INTERMEDIATE DIAPHRAGMS
SB1	SHOP BOLT SUMMARIES FOR GIRDER ASSEMBLIES
C1 THRU C4	WEB CUTTING AND FLANGE ASSEMBLY DIAGRAMS
X1	PRE-DETAILS
1AB & 1B THRU 36AB & 36B	GIRDER DETAILS
37 THRU 39	DIAPHRAGM DETAILS

SHOP DRAWING REVIEW

REVIEW IS FOR GENERAL COMPLIANCE WITH CONTRACT DOCUMENTS NO RESPONSIBILITY ASSUMED FOR CORRECTNESS OF DIMENSIONS OR DETAILS

NO EXCEPTIONS TAKEN	DFT
MAKE CORRECTIONS NOTED	
AMEND & RESUBMIT	
REJECTED – SEE REMARKS	

E.L. ROBINSON ENGINEERING

Date 10-24-19 By Dal F. T.

All sheets listed above have been reviewed and no exceptions to shop drawings taken. DFT

DJW = DOUGLAS J WEAVER
DMW - DAVID M WEAVER

REV / RELEASE RECORD		
0	FINAL APPROVAL / PROD.	09-20-19
C	FINAL APPROVAL	06-21-19
B	REL. FOR APPROVAL	05-23-19
A	REL. FOR INTERNAL REVIEW	04-08-19

GENERAL NOTES & SHEET INDEX

WABASH — WABASH STEEL COMPANY, LLC, 2007 OLIPHANT DRIVE, VINCENNES, INDIANA 47591

Drawn	Checked	Approved	Revised
DMW 3-21-19	DJW 3-25-19		

PROJECT NO. CUY-IR490/SR 010-2.09/19.28
SFN: 1801519 ~ REF. NO. 20
PID NO. 96833
BR. NO. CUY-010-2039
NORFOLK SOUTHERN RAILROAD OVER OH-10
CUYAHOGA COUNTY, OHIO
CONTRACTOR: KOKOSING
OWNER: OHIO DEPARTMENT OF TRANSPORTATION

Shop Paint:
Edge Distance: Holes:
WSLLC No.: 179-18 Sh. GN1 of 3

GENERAL NOTES

SPECIFICATIONS:

1 CONSTRUCTION OF THIS STRUCTURE SHALL CONFORM TO:
- OHIO DEPARTMENT OF TRANSPORTATION "CONSTRUCTION AND MATERIAL SPECIFICATIONS" DATED JANUARY 01, 2016.
- SUPPLEMENTAL SPECIFICATIONS, AS INDICATED ON PROJECT PLANS.
- NSRR-PPM APPENDIX H.4.1 - "SPECIFICATIONS FOR STRUCTURAL STEEL"
- AREMA SPECIFICATIONS, CHAPTER 15, CURRENT EDITION.

2 ANSI/AASHTO/AWS "BRIDGE WELDING CODE, D1.5" CURRENT EDITION, AS MODIFIED BY AREMA CHAPTER 15 & NSRR-PPM.

3 MATERIAL, FABRICATION AND WORKMANSHIP SHALL BE IN ACCORDANCE WITH:
- OHIO DEPARTMENT OF TRANSPORTATION "CONSTRUCTION AND MATERIAL SPECIFICATIONS" DATED JANUARY 01, 2016 AND CITY OF COLUMBUS CONSTRUCTION AND MATERIAL SPECIFICATIONS, 2012 EDITION.
- SUPPLEMENTAL SPECIFICATIONS, AS INDICATED ON THE PROJECT PLANS.
- NSRR-PPM APPENDIX H.4.1 - "SPECIFICATIONS FOR STRUCTURAL STEEL"
- AREMA SPECIFICATIONS, CHAPTER 15, CURRENT EDITION.

MATERIAL:

1 ALL STRUCTURAL STEEL SHALL BE ASTM A709 GR 50.

2 MATERIAL, FABRICATION AND WORKMANSHIP SHALL BE IN ACCORDANCE WITH:
- OHIO DEPARTMENT OF TRANSPORTATION "CONSTRUCTION AND MATERIAL SPECIFICATIONS" DATED JANUARY 01, 2016.
- SUPPLEMENTAL SPECIFICATIONS, AS INDICATED ON PROJECT PLANS.
- NSRR-PPM APPENDIX H.4.1 - "SPECIFICATIONS FOR STRUCTURAL STEEL"
- AREMA SPECIFICATIONS, CHAPTER 15, CURRENT EDITION.

3 STRUCTURAL STEEL NOTED "T2", OR "CVN" INDICATES MATERIAL WHICH IS TO BE SUBJECT TO CHARPY V NOTCH TESTING, IN ACCORDANCE WITH AREMA TABLE 15-1-2, NOTE 1, AS FOLLOWS: (FABRICATOR IS CERTIFIED UNDER THE AISC QUALITY CERTIFICATION PROGRAM AS FOLLOWS: FOR WELDED PLATE GIRDERS - MAJOR STEEL BRIDGE CATEGORY)

ASTM A709 GR. 50:
- 15 FT-LB @ 40 DEGREE F <= 2" THICK WELDED.
- 20 FT-LB @ 40 DEGREE F > 2" THICK WELDED.
- CVN TESTING TO BE "H" FREQUENCY.
- MATERIAL TO MEET THE FOLLOWING SUPPLEMENTARY REQUIREMENTS:
  - •• S29 (FINE AUSTENITIC GRAIN SIZE)

4 STRUCTURAL STEEL NOTED "F2", OR "FCM-2" INDICATES MATERIAL WHICH IS TO BE SUBJECT TO CHARPY V NOTCH TESTING, IN ACCORDANCE WITH AREMA TABLE 15-1-14, NOTE 1, AS FOLLOWS: (FABRICATOR IS CERTIFIED UNDER THE AISC QUALITY CERTIFICATION PROGRAM AS FOLLOWS: FOR WELDED PLATE GIRDERS - MAJOR STEEL BRIDGE CATEGORY; FOR ROLLED BEAM BRIDGES - SIMPLE STEEL BRIDGE STRUCTURES CATEGORY)

ASTM A709 GR. 50:
- 25 FT-LB @ 40 DEGREE F <= 2" THICK WELDED.
- 30 FT-LB @ 40 DEGREE F > 2" THICK WELDED.
- CVN TESTING TO BE "P" FREQUENCY, EXCEPT AS INDICATED OTHERWISE BY AREMA TABLE 15-1-14, NOTE 1.
- MATERIAL TO MEET THE FOLLOWING SUPPLEMENTARY REQUIREMENTS:
  - •• S29 (FINE AUSTENITIC GRAIN SIZE)
  - •• S93 (LIMITATIONS ON WELD REPAIRS)

5 IF THE YIELD POINT OF THE STRUCTURAL PRODUCT EXCEEDS 65 KSI, THE TESTING TEMPERATURE FOR THE MINIMUM AVERAGE ENERGY AND MINIMUM TEST VALUE ENERGY REQUIRED SHALL BE REDUCED BY 15° F FOR EACH INCREMENT OF 10 KSI ABOVE 65 KSI. THE YIELD POINT IS THE VALUE GIVEN IN THE TEST REPORT.

6 FOR ALL OTHER STEEL NOT INDICATED ABOVE, FABRICATOR IS CERTIFIED UNDER THE AISC QUALITY CERTIFICATION PROGRAM AS FOLLOWS: FOR ROLLED BEAM BRIDGES - SIMPLE STEEL BRIDGE STRUCTURES CATEGORY.

7 ALL BOLTS TO BE HEAVY HEX ASTM F3125 GRADE A325 1" DIA. & 7/8" DIA. TYPE 1, MECH. GALV.
ALL HEAVY HEX NUTS TO BE ASTM A563. (GALVANIZED)
ALL HARDENED FLAT WASHERS TO BE ASTM F436. (GALVANIZED)

8 ALL BOLTS TO BE INSTALLED AND TORQUED USING THE TURN OF NUT METHOD. TENSION CONTROL BOLTS ARE NOT PERMITTED.

9 ALL HIGH STRENGTH BOLTS SHALL BE ROTATIONAL CAPACITY TESTED PRIOR TO USE. DO NOT MIX BOLTS OR NUTS FROM DIFFERENT LOTS.

10 ALL FIELD HEX NUTS AND PERMANENT SHOP BOLTS (THAT ARE INSTALLED AFTER PRIME PAINTING) SHALL HAVE THE LUBRICANT WAX ONLY APPLIED TO TO THE THREADS AND WASHER FACE.

FABRICATION AND WORKMANSHIP:

1 CLIP CORNERS OF ALL BEARING STIFFENERS, CROSSFRAME CONNECTION PLATES AND INTERMEDIATE STIFFENERS AND TERMINATE WELDS AS INDICATED ON DETAILS AS SHOWN ON SHEET GN2.

2 THE WEIGHTS SHOWN ON DETAIL SHEETS ARE FOR INFORMATIONAL PURPOSES ONLY. VERIFY ALL WEIGHTS PRIOR TO LIFTING AND SHIPPING MEMBERS.

WELDING:

1 ALL WELDING SHALL BE IN ACCORDANCE WITH ANSI/AASHTO/AWS (D1.5-CURRENT EDITION) BRIDGE WELDING CODE, AS MODIFIED BY AREMA CHAPTER 15 AND NSRR-PPM.

2 ALL WELD INSPECTIONS TO BE IN ACCORDANCE WITH OHIO DEPARTMENT OF TRANSPORTATION "CONSTRUCTION AND MATERIAL SPECIFICATIONS", DATED JANUARY 01, 2016, AND WITH ANSI/AASHTO/AWS (D1.5-CURRENT EDITION) BRIDGE WELDING CODE, AS MODIFIED BY AREMA CHAPTER 15 AND NSRR-PPM.

3 ONLY SAW AND SMAW WELD PROCEDURES MAY BE USED.

INSPECTION:

1. THE FABRICATOR SHALL FURNISH COPIES OF CERTIFIED MILL INSPECTION REPORTS TO THE RAILROAD FOR ALL STRUCTURAL STEEL REQUIRING IMPROVED NOTCH TOUGHNESS.

2. THE FABRICATOR SHALL MEET THE REQUIREMENTS OF THE AREMA FRACTURE CONTROL PLAN DESCRIBED IN CHAPTER 15, PART 1, ARTICLE 1.14 FOR ALL MEMBERS AND COMPONENTS DESIGNATED AS FRACTURE CONTROL.

3. ALL NON-DESTRUCTIVE TESTING SHALL BE PERFORMED BY THE FABRICATOR AND WITNESSED BY THE RAILROAD'S INSPECTOR.

4. COPIES OF ALL WELD INSPECTIONS AND NON-DESTRUCTIVE TESTING REPORTS SHALL BE FURNISHED TO THE RAILROAD.

5. NONDESTRUCTIVE WELD INSPECTION SHALL BE IN ACCORDANCE WITH CHAPTER 6 OF THE ANSI / AASHTO / AWS D1.5-CURRENT EDITION BRIDGE WELDING CODE, AND WITH SECTION 513.25 OF THE OHIO DEPARTMENT OF TRANSPORTATION "CONSTRUCTION AND MATERIAL SPECIFICATIONS" JANUARY 01, 2016, AS MODIFIED BY AREMA CHAPTER 15 AND NSRR-PPM.

6. "RT" INDICATES RADIOGRAPHIC INSPECTION

7. IN ADDITION, THE FABRICATOR SHALL PERFORM THE FOLLOWING WELD TESTING INSPECTION:

7.1 ALL TRANSVERSE TENSION GROOVE WELDS IN FCM MEMBERS, WHEN ALLOWED BY THE ENGINEER, SHALL BE RT AND UT TESTED 100%. IN NON FCM COMPONENTS OF FCM'S ALL TRANSVERSE GROOVE WELDS SHALL BE RT OR UT TESTED 100%.
7.2 ALL FLANGE TO WEB WELDS SHALL BE TESTED ON BOTH SIDES IN ACCORDANCE WITH AWS D1.5/2013 CLAUSE 6.7.
7.3 ALL FLANGE TO WEB FILLET WELDS , WHEN ALLOWED BY THE ENGINEER, ARE TO MAGNETIC PARTICLE TESTED 100%.
7.4 10% OF ALL WELDS NOT MENTIONED ABOVE SHALL BE MAGNETIC PARTICLE TESTED.

CLEANING AND PAINTING:

1 ALL CLEANING OF STEEL TO BE IN ACCORDANCE WITH OHIO DEPARTMENT OF TRANSPORTATION "CONSTRUCTION AND MATERIAL SPECIFICATIONS", SECTION 514.13, CURRENT EDITION, AND SUPPLEMENTAL SPECIFICATIONS, IF INDICATED, AS SHOWN ON PROJECT PLANS, AS WELL AS IN ACCORDANCE WITH NORFOLK SOUTHERN PAINT SPECIFICATIONS.

2 BLASTING OF ALL STRUCTURAL STEEL TO BE IN ACCORDANCE WITH SSPC-SP10 AND AS SHOWN ON THE PICTORIAL SURFACE PREPARATION STANDARDS FOR PAINTING STEEL SURFACES AS SHOWN IN SSPC-VIS 1, AS WELL AS IN ACCORDANCE WITH NORFOLK SOUTHERN PAINT SPECIFICATIONS.

3 SHOP PAINTING TO BE A PRIME COAT ONLY PAINT SYSTEM PER SECTION 514 OF OHIO DEPARTMENT OF TRANSPORTATION "CONSTRUCTION AND MATERIAL SPECIFICATIONS." (LIMITS AS INDICATED ON GN3) AS WELL AS IN ACCORDANCE WITH NORFOLK SOUTHERN PUBLIC PROJECT MANUAL SECTIONS H.4.4 AND H.4.5. FINISH COAT PAINT COLOR SHALL BE PROVIDED BY THE ENGINEER. (FINAL PAINT BY OTHERS - FIELD APPLIED)
- PRIME COAT DRY FILM THICKNESS SHALL BE 3 - 5 MILS
- PRIME PAINT TO BE PER 708.01 OF ODOT CMS, CURRENT EDITION.
- PAINT TO BE CARBOLINE CARBOZINC 11HS.

SHOP DRAWING INDEX

DRAWING NO.	DESCRIPTION
GN1	GENERAL NOTES, DRAWING INDEX
GN2	WELDING STANDARD DETAILS
GN3	PAINTING STANDARD DETAILS
E1	FRAMING PLANS, FIELD BOLTS
E2	BRIDGE SECTIONS @ ABUTMENTS & PIERS
E3 THRU E6	BRIDGE SECTIONS @ INTERMEDIATE DIAPHRAGMS
SB1	SHOP BOLT SUMMARIES FOR GIRDER ASSEMBLIES
C1 THRU C4	WEB CUTTING AND FLANGE ASSEMBLY DIAGRAMS
X1	PRE-DETAILS
1AB & 1B THRU 36AB & 36B	GIRDER DETAILS
37 THRU 39	DIAPHRAGM DETAILS

DJW = DOUGLAS J WEAVER
DMW - DAVID M WEAVER

REV / RELEASE RECORD		
0	FINAL APPROVAL / PROD.	09-20-19
C	FINAL APPROVAL	06-21-19
B	REL. FOR APPROVAL	05-23-19
A	REL. FOR INTERNAL REVIEW	04-08-19

GENERAL NOTES & SHEET INDEX

WABASH

WABASH STEEL COMPANY, LLC
2007 OLIPHANT DRIVE
VINCENNES, INDIANA 47591

Drawn	Checked	Approved	Revised
DMW 3-21-19	DJW 3-25-19		

PROJECT NO. CUY-IR490/SR 010-2.09/19.28
SFN: 1801519 ~ REF. NO. 20
PID NO. 96833
BR. NO. CUY-010-2039
NORFOLK SOUTHERN RAILROAD OVER OH-10
CUYAHOGA COUNTY, OHIO
CONTRACTOR: KOKOSING
OWNER: OHIO DEPARTMENT OF TRANSPORTATION

Shop Paint:
Edge Distance: Holes:
WSLLC No.: 179-18 Sh. GN1 of 3

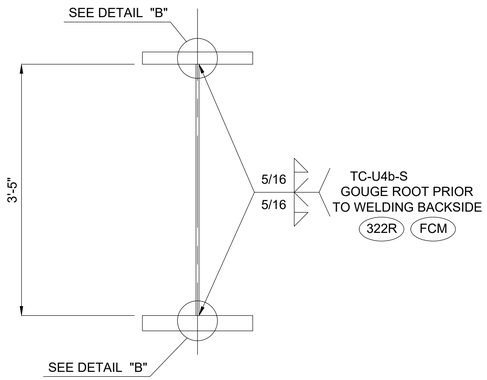

DETAIL "A"

GIRDER WEB TO FLG. WELD DETAIL

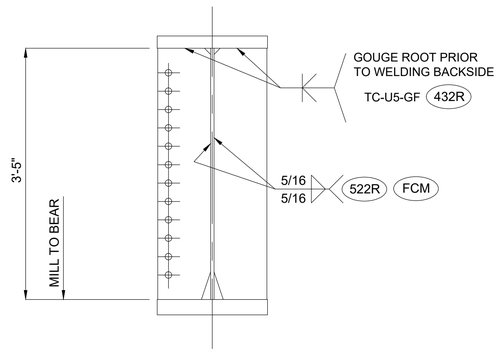

DETAIL "C"

BEARING STIFFENER DETAIL

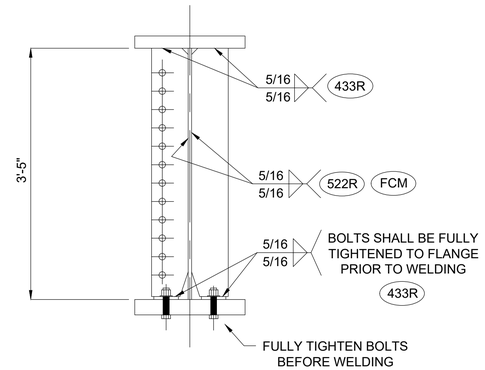

DETAIL "D"

INTERMEDIATE STIFFENER DETAIL
@ DIAPHRAGMS

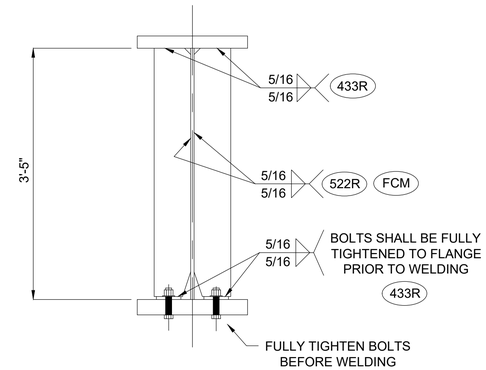

DETAIL "E"

TRANSVERSE STIFFENER DETAIL

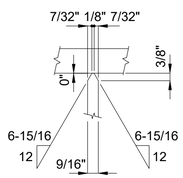

DETAIL "B"

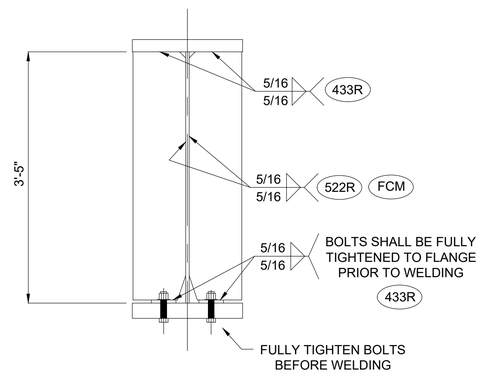

DETAIL "F"

JACKING STIFFENER DETAIL

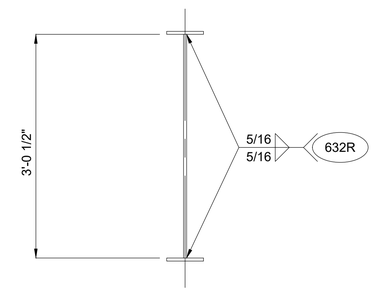

DETAIL "G"

END & INTERMEDIATE DIAPHRAGM
WEB TO FLG. WELD DETAIL

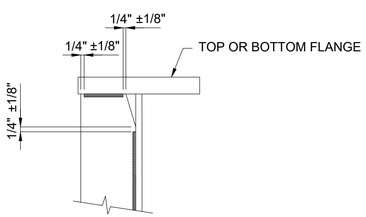

GIRDER STIFFENERS

WELD TERMINATION SKETCH "WS1"

REV / RELEASE RECORD		
0	FINAL APPROVAL / PROD.	09-20-19
C	FINAL APPROVAL	06-21-19
B	REL. FOR APPROVAL	05-23-19
A	REL. FOR INTERNAL REVIEW	04-08-19

STANDARD WELD DETAILS

WABASH

WABASH STEEL COMPANY, LLC
2007 OLIPHANT DRIVE
VINCENNES, INDIANA 47591

Drawn	Checked	Approved	Revised
DMW 3-21-19	DJW 3-25-19		

PROJECT NO. CUY-IR490/SR 010-2.09/19.28
SFN: 1801519 ~ REF. NO. 20
PID NO. 96833
BR. NO. CUY-010-2039
NORFOLK SOUTHERN RAILROAD OVER OH-10
CUYAHOGA COUNTY, OHIO
CONTRACTOR: KOKOSING
OWNER: OHIO DEPARTMENT OF TRANSPORTATION

Shop Paint:

Edge Distance: Holes:

WSLLC No.: 179-18 Sh. GN2 of 3

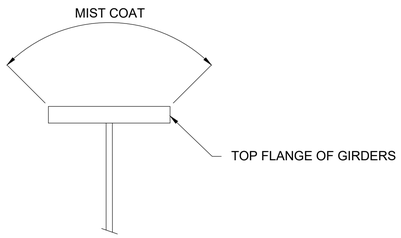

PAINTING LIMITS AT TOP FLANGES OF ALL GIRDERS

REV / RELEASE RECORD		
0	FINAL APPROVAL / PROD.	09-20-19
C	FINAL APPROVAL	06-21-19
B	REL. FOR APPROVAL	05-23-19
A	REL. FOR INTERNAL REVIEW	04-08-19

STANDARD PAINT DETAILS

WABASH

WABASH STEEL COMPANY, LLC
2007 OLIPHANT DRIVE
VINCENNES, INDIANA 47591

Drawn	Checked	Approved	Revised
DMW 3-21-19	DJW 3-25-19		

PROJECT NO. CUY-IR490/SR 010-2.09/19.28
SFN: 1801519 ~ REF. NO. 20
PID NO. 96833
BR. NO. CUY-010-2039
NORFOLK SOUTHERN RAILROAD OVER OH-10
CUYAHOGA COUNTY, OHIO
CONTRACTOR: KOKOSING
OWNER: OHIO DEPARTMENT OF TRANSPORTATION

Shop Paint:

Edge Distance: Holes:

WSLLC No.: 179-18 Sh. GN3 of 3

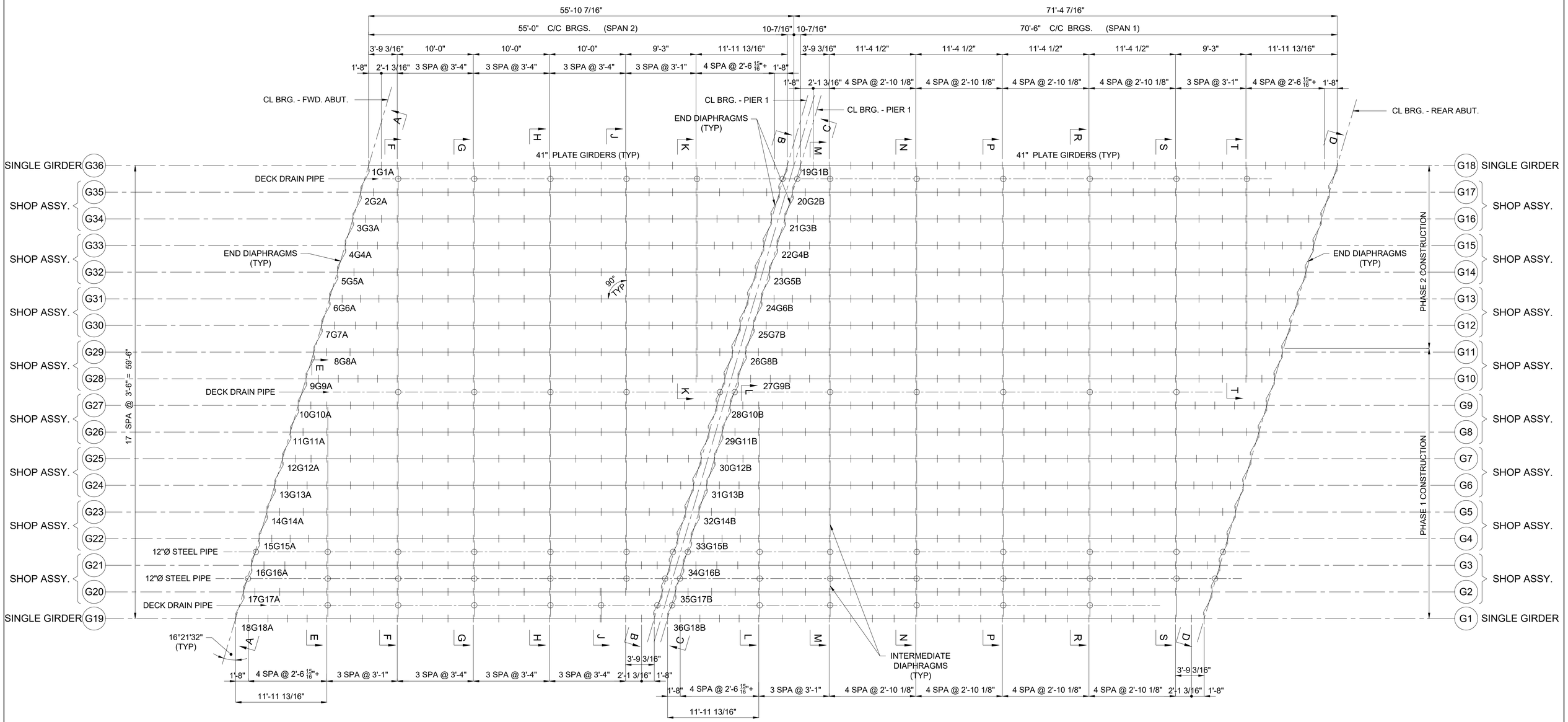

- INDICATES DIAPHRAGM WITH UTILITY OR DRAINAGE OPNG.

FIELD BOLT PT TO PT LIST

TOTAL QUAN.	DIAM.	BOLTS LENGTH	BOLTS HEAD	BOLTS NUT	BOLTS WASHER	BOLTS BOLT TYPE	GRIP	THICKNESS OF MATERIAL CONNECTED					LOCATION	PHASE 1	PHASE 2
2328	1"	2-3/4"	HVY HEX	HVY HEX	2-HW	NOTE 1	1	1/2	1/2				INTER. DIAPHRAGMS	1272	1056
864	1"	2-3/4"	HVY HEX	HVY HEX	2-HW	NOTE 1	1	1/2	1/2				END DIAPHRAGMS	480	384

NOTE 1 - ASTM F3125 GRADE A325 HIGH STRENGTH TYPE 1 (MECH. GALV.)

FIELD BOLT LIST SUMMARY

(5% ADDED +10 FOR RC TESTING)
SEE GN1 FOR BOLT SPECS & TESTING REQUIREMENTS

QTY	LENGTH	DESCRIPTION	ACT QTY	PHASE 1	PHASE 2
3362	2-3/4"	1" DIA HSB (2-HARD. WASH. EA)	3192	1752	1440

BOLTS TO BE ASTM F3125 GRADE A325 HIGH STRENGTH TYPE 1 (MECH. GALV.)

SHOP BOLT LIST SUMMARY IS A COMPILATION OF ALL BOLTS INDICATED ON INDIVIDUAL BOM'S AS WELL AS SB1.

SEE SHEET SB1 FOR INDIVIDUAL SHOP ASSEMBLY SHOP BOLT LISTS

SHOP BOLT LIST SUMMARY

(5% ADDED +10 FOR RC TESTING)
SEE GN1 FOR BOLT SPECS & TESTING REQUIREMENTS

QTY	LENGTH	DESCRIPTION	ACT QTY
1346	3-3/4"	1" DIA HSB (1-HARD. WASH. EA) 1	1272
1875	4-3/4"	1" DIA HSB (1-HARD. WASH. EA)	1776
3034	2-3/4"	1" DIA HSB (1-HARD. WASH. EA)	2880
86	2-1/2"	7/8" DIA HSB (1-HARD. WASH. EA)	72
136	2-1/4"	7/8" DIA HSB (1-HARD. WASH. EA)	120

BOLTS TO BE ASTM F3125 GRADE A325 HIGH STRENGTH TYPE 1 (MECH. GALV.)

BRIDGE FRAMING PLAN

NOTES:
1) DIMENSIONS SHOWN ON FRAMING PLAN ARE HORIZONTAL AND DO NOT REFLECT ADJUSTMENTS FOR GRADE OR CAMBER.
2) FOR GENERAL NOTES AND DETAIL STANDARDS, SEE SHEET GN1 THRU GN3
3) STRUCTURAL STEEL TO BE ERECTED WITH THE MARKS AS SHOWN ON THE FRAMING PLAN.
4) SEE SHEETS E2 THRU E6 FOR SECTIONS.
5) ENDS OF GIRDER AND ALL BEARING STIFFENERS TO BE VERTICAL AFTER D.L. ROTATION.
6) DIAPHRAGMS ARE NORMAL TO GRADE.
7) DIAPHRAGM DROPS ARE CALCULATED IN THEIR "AFTER ERECTION" POSITION.
8) ALL DIAPHRAGM MARKS APPEAR ON SHEETS E2 THRU E6.

1	REVISION TO SHOP BOLTS	08-11-20

REV / RELEASE RECORD

0	FINAL APPROVAL / PROD.	09-20-19
C	FINAL APPROVAL	06-21-19
B	REL. FOR APPROVAL	05-23-19
A	REL. FOR INTERNAL REVIEW	04-08-19

BRIDGE FRAMING PLAN

WABASH

WABASH STEEL COMPANY, LLC
2007 OLIPHANT DRIVE
VINCENNES, INDIANA 47591

Drawn	Checked	Approved	Revised
DMW 4-01-19	DJW 4-03-19		

PROJECT NO. CUY-IR490/SR 010-2.09/19.28
SFN: 1801519 ~ REF. NO. 20
PID NO. 96833
BR. NO. CUY-010-2039
NORFOLK SOUTHERN RAILROAD OVER OH-10
CUYAHOGA COUNTY, OHIO
CONTRACTOR: KOKOSING
OWNER: OHIO DEPARTMENT OF TRANSPORTATION

Shop Paint:
Edge Dist.: Holes:
WSLLC No.: 179-18 Sh. E1 of 6

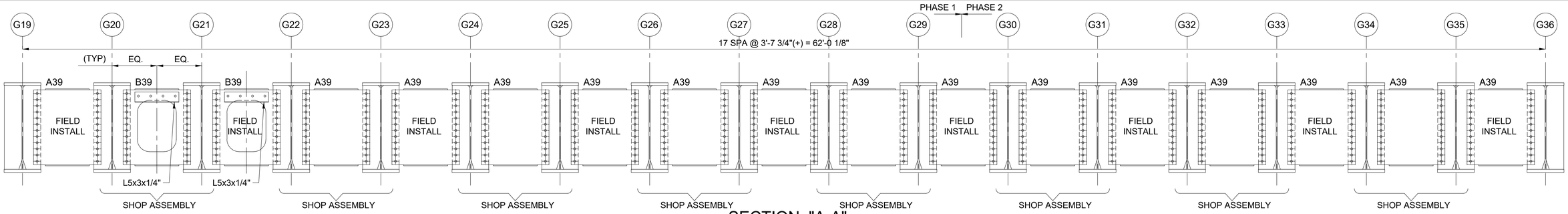

SECTION "A-A"

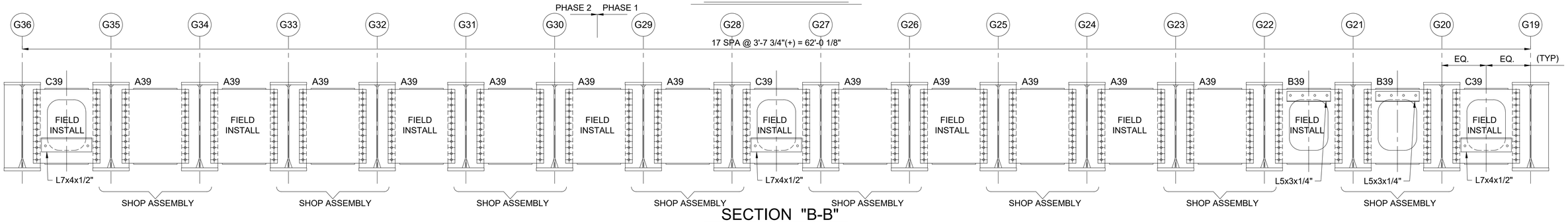

SECTION "B-B"

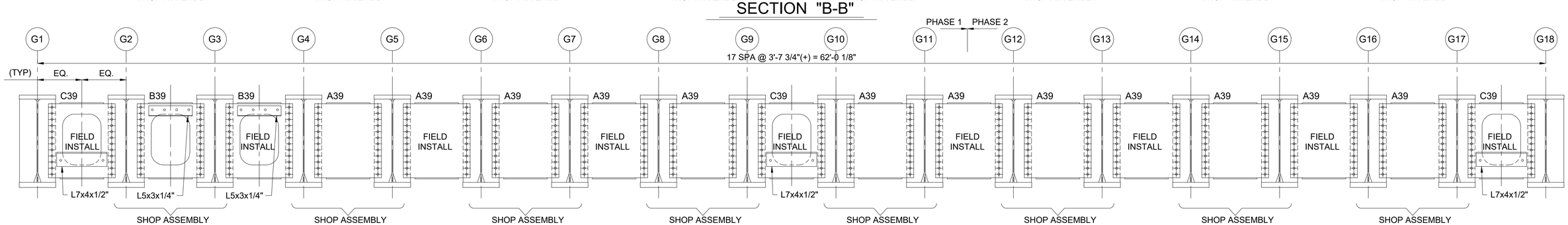

SECTION "C-C"

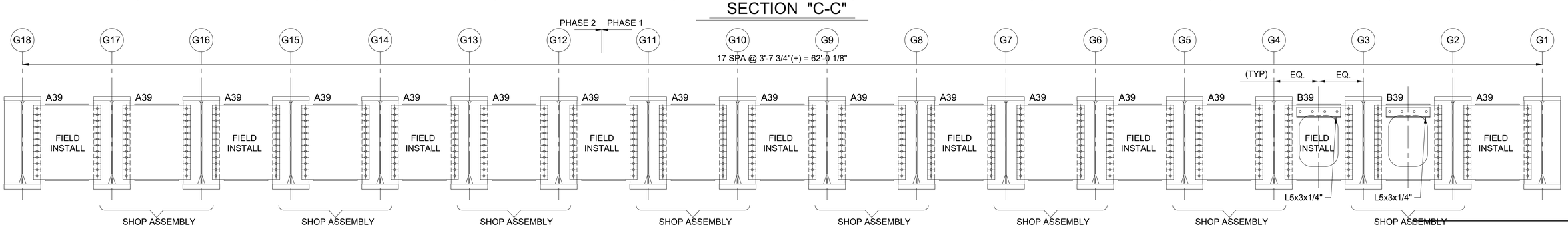

SECTION "D-D"

REV / RELEASE RECORD		
0	FINAL APPROVAL / PROD.	09-20-19
C	FINAL APPROVAL	06-21-19
B	REL. FOR APPROVAL	05-23-19
A	REL. FOR INTERNAL REVIEW	04-08-19

SECTIONS

WABASH

WABASH STEEL COMPANY, LLC
2007 OLIPHANT DRIVE
VINCENNES, INDIANA 47591

Drawn	Checked	Approved	Revised
DMW 4-02-19	DJW 4-04-19		

PROJECT NO. CUY-IR490/SR 010-2.09/19.28
SFN: 1801519 ~ REF. NO. 20
PID NO. 96833
BR. NO. CUY-010-2039
NORFOLK SOUTHERN RAILROAD OVER OH-10
CUYAHOGA COUNTY, OHIO
CONTRACTOR: KOKOSING
OWNER: OHIO DEPARTMENT OF TRANSPORTATION

Shop Paint:
Edge Dist.: Holes:
WSLLC No.: 179-18 Sh. E2 of 6

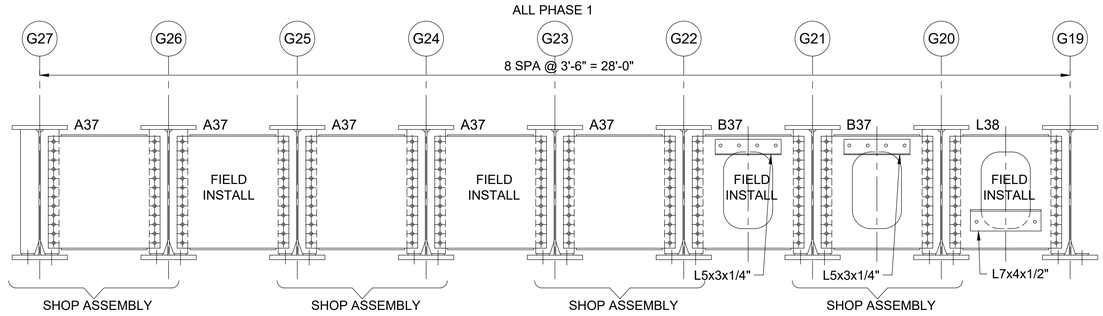

SECTION "E-E"

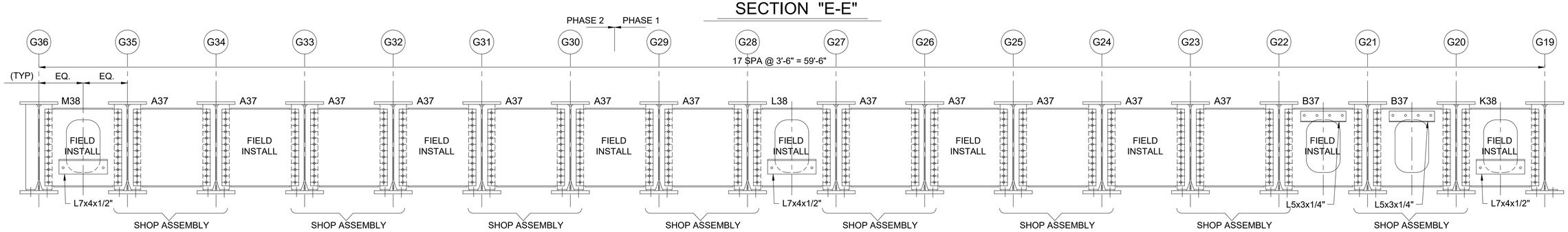

SECTION "F-F"

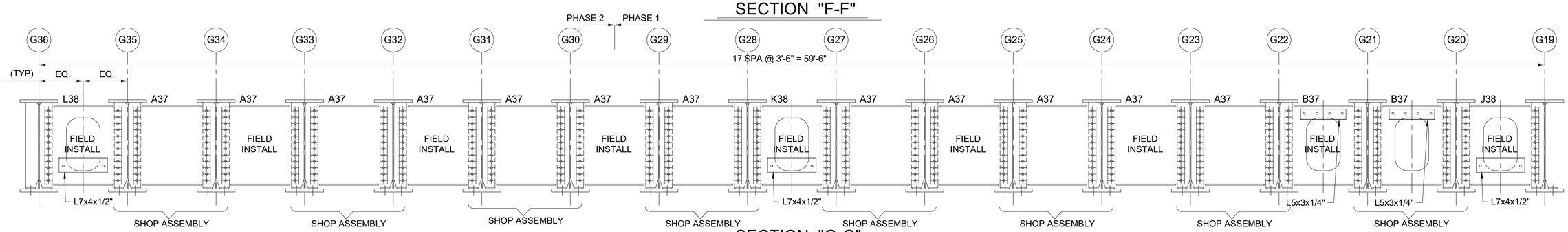

SECTION "G-G"

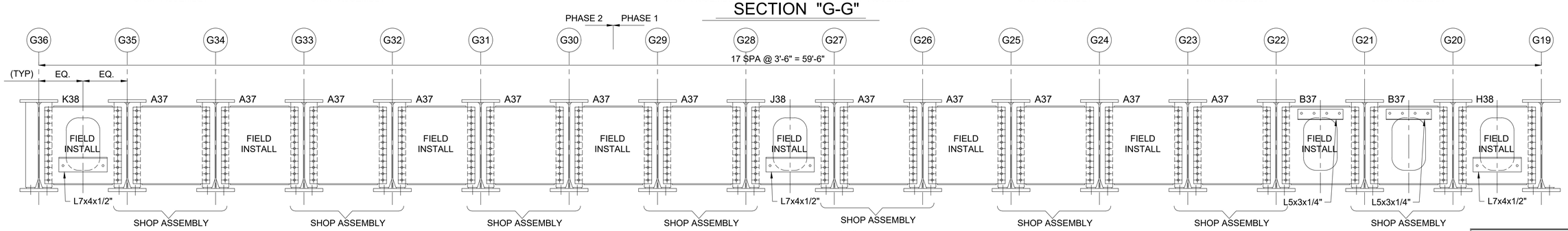

SECTION "H-H"

REV / RELEASE RECORD		
0	FINAL APPROVAL / PROD.	09-20-19
C	FINAL APPROVAL	06-21-19
B	REL. FOR APPROVAL	05-23-19
A	REL. FOR INTERNAL REVIEW	04-08-19

SECTIONS

WABASH

WABASH STEEL COMPANY, LLC
2007 OLIPHANT DRIVE
VINCENNES, INDIANA 47591

Drawn	Checked	Approved	Revised
DMW 4-02-19	DJW 4-04-19		

PROJECT NO. CUY-IR490/SR 010-2.09/19.28
SFN: 1801519 ~ REF. NO. 20
PID NO. 96833
BR. NO. CUY-010-2039
NORFOLK SOUTHERN RAILROAD OVER OH-10
CUYAHOGA COUNTY, OHIO
CONTRACTOR: KOKOSING
OWNER: OHIO DEPARTMENT OF TRANSPORTATION

Shop Paint:
Edge Dist.: Holes:
WSLLC No.: 179-18 Sh. E3 of 6

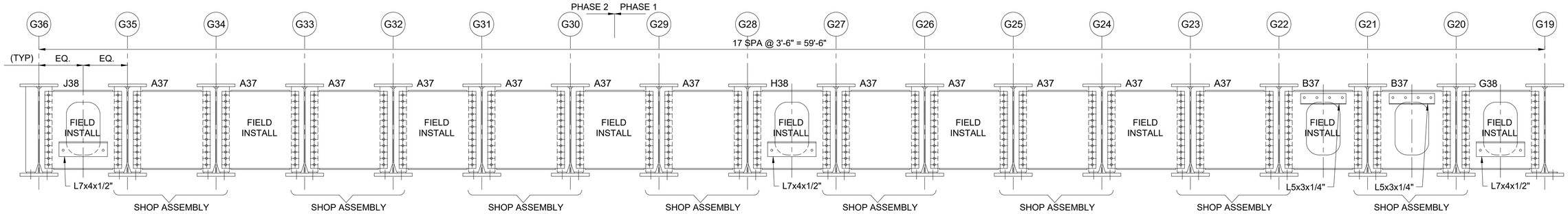

SECTION "J-J"

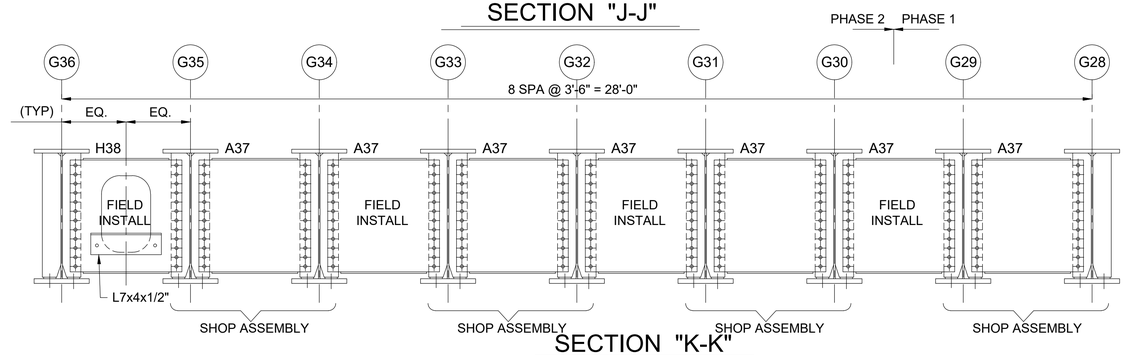

SECTION "K-K"

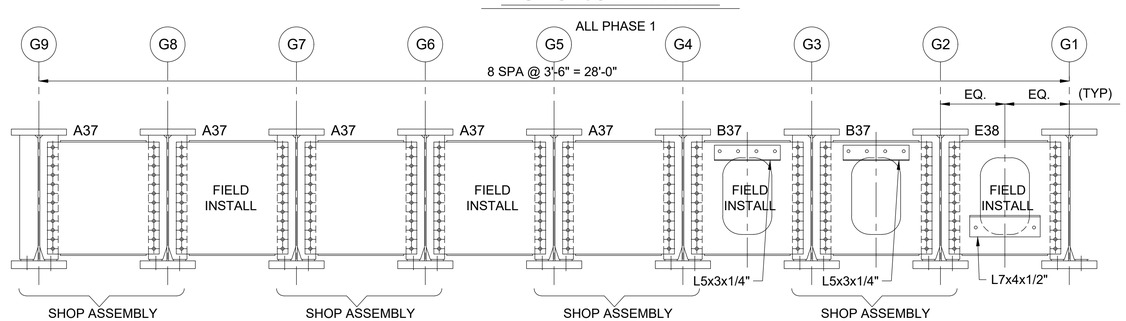

SECTION "L-L"

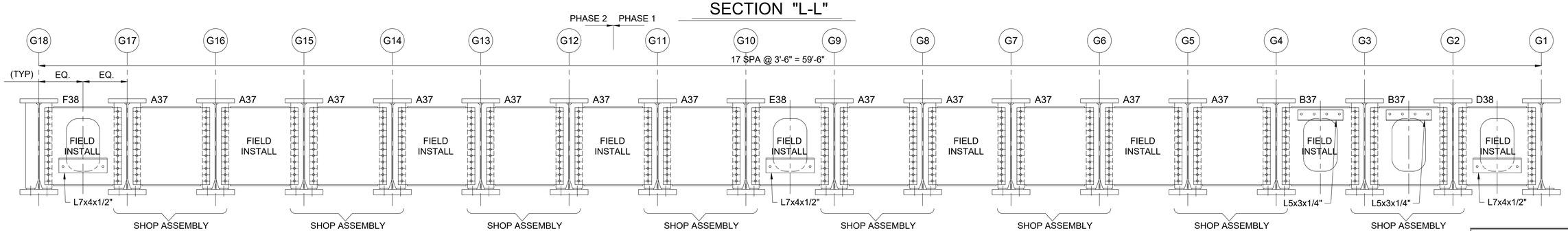

SECTION "M-M"

REV / RELEASE RECORD		
0	FINAL APPROVAL / PROD.	09-20-19
C	FINAL APPROVAL	06-21-19
B	REL. FOR APPROVAL	05-23-19
A	REL. FOR INTERNAL REVIEW	04-08-19

SECTIONS

WABASH

WABASH STEEL COMPANY, LLC
2007 OLIPHANT DRIVE
VINCENNES, INDIANA 47591

Drawn	Checked	Approved	Revised
DMW 4-02-19	DJW 4-04-19		

PROJECT NO. CUY-IR490/SR 010-2.09/19.28
SFN: 1801519 ~ REF. NO. 20
PID NO. 96833
BR. NO. CUY-010-2039
NORFOLK SOUTHERN RAILROAD OVER OH-10
CUYAHOGA COUNTY, OHIO
CONTRACTOR: KOKOSING
OWNER: OHIO DEPARTMENT OF TRANSPORTATION

Shop Paint:
Edge Dist.: Holes:
WSLLC No.: 179-18 Sh. E4 of 6

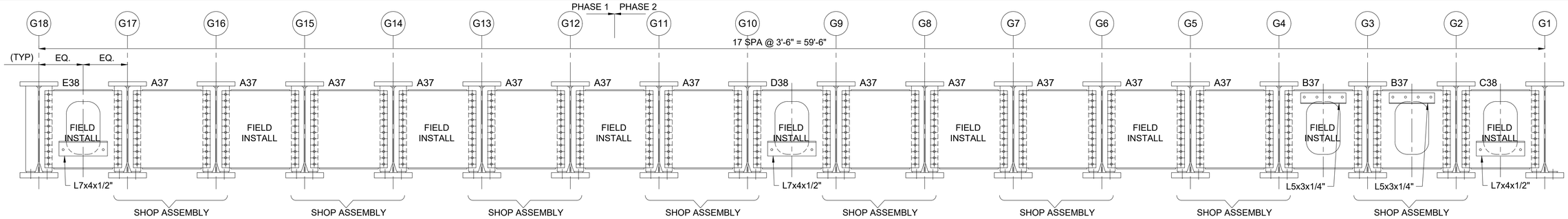

SECTION "N-N"

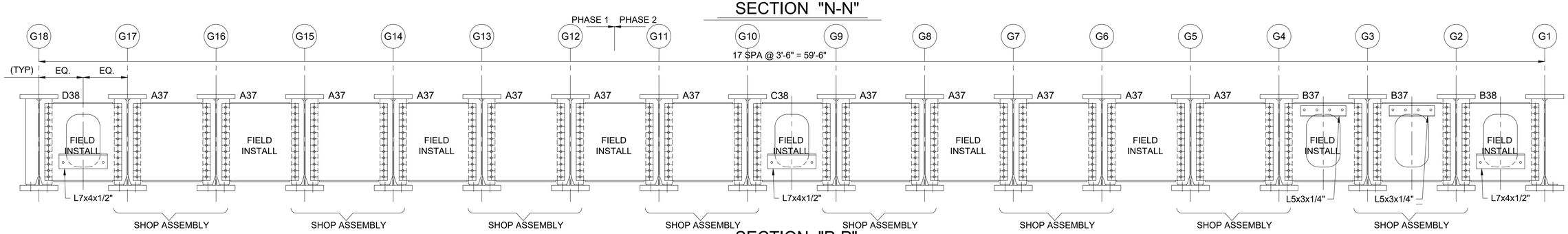

SECTION "P-P"

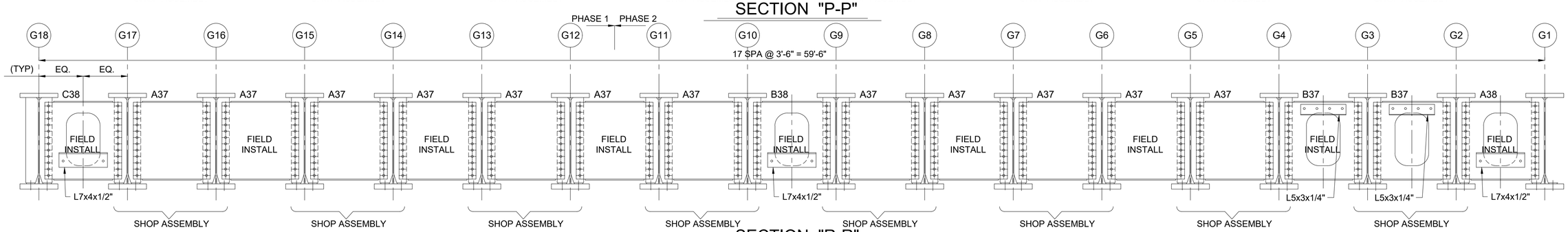

SECTION "R-R"

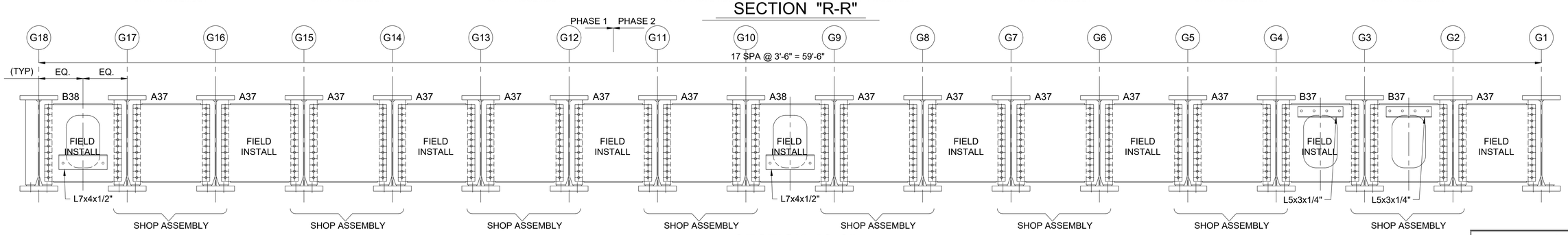

SECTION "S-S"

REV / RELEASE RECORD		
0	FINAL APPROVAL / PROD.	09-20-19
C	FINAL APPROVAL	06-21-19
B	REL. FOR APPROVAL	05-23-19
A	REL. FOR INTERNAL REVIEW	04-08-19

SECTIONS

WABASH

WABASH STEEL COMPANY, LLC
2007 OLIPHANT DRIVE
VINCENNES, INDIANA 47591

Drawn	Checked	Approved	Revised
DMW 4-02-19	DJW 4-04-19		

PROJECT NO. CUY-IR490/SR 010-2.09/19.28
SFN: 1801519 ~ REF. NO. 20
PID NO. 96833
BR. NO. CUY-010-2039
NORFOLK SOUTHERN RAILROAD OVER OH-10
CUYAHOGA COUNTY, OHIO
CONTRACTOR: KOKOSING
OWNER: OHIO DEPARTMENT OF TRANSPORTATION

Shop Paint:
Edge Dist.: Holes:
WSLLC No.: 179-18 Sh. E5 of 6

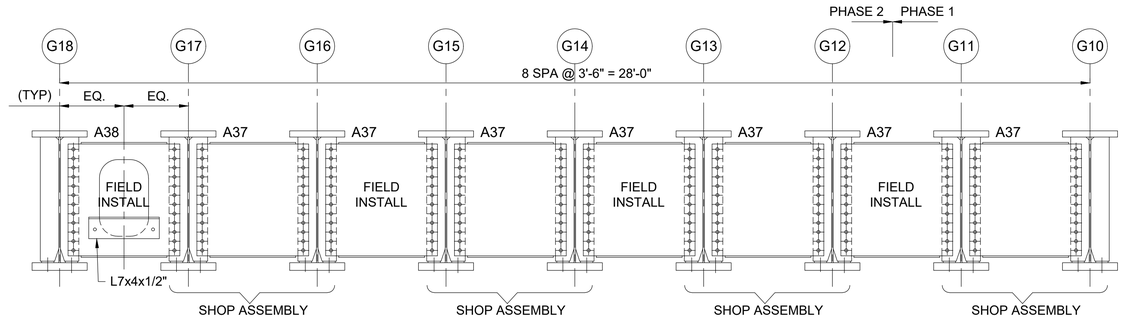

SECTION "T-T"

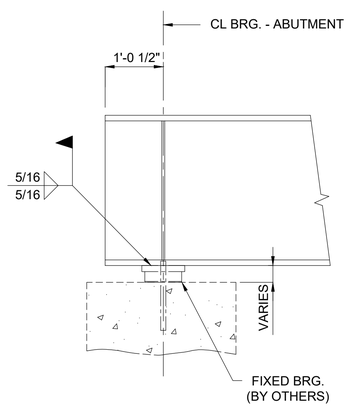

TYP. BEARING DETAIL
@ ABUTMENTS

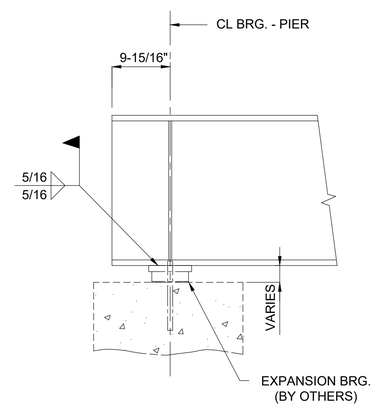

TYP. BEARING DETAIL
@ PIER

REV / RELEASE RECORD		
0	FINAL APPROVAL / PROD.	09-20-19
C	FINAL APPROVAL	06-21-19
B	REL. FOR APPROVAL	05-23-19
A	REL. FOR INTERNAL REVIEW	04-08-19

SECTIONS

WABASH

WABASH STEEL COMPANY, LLC
2007 OLIPHANT DRIVE
VINCENNES, INDIANA 47591

Drawn	Checked	Approved	Revised
DMW 4-02-19	DJW 4-04-19		

PROJECT NO. CUY-IR490/SR 010-2.09/19.28
SFN: 1801519 ~ REF. NO. 20
PID NO. 96833
BR. NO. CUY-010-2039
NORFOLK SOUTHERN RAILROAD OVER OH-10
CUYAHOGA COUNTY, OHIO
CONTRACTOR: KOKOSING
OWNER: OHIO DEPARTMENT OF TRANSPORTATION

Shop Paint:
Edge Dist.: Holes:
WSLLC No.: 179-18 Sh. E6 of 6

G2-G3 ASSEMBLY SHOP BOLT PT TO PT LIST

TOTAL QUAN.	DIAM.	BOLTS LENGTH	BOLTS HEAD	BOLTS NUT	BOLTS WASHER	BOLTS BOLT TYPE	GRIP	THICKNESS OF MATERIAL CONNECTED					LOCATION
144	1"	2-3/4"	HVY HEX	HVY HEX	1-HW	NOTE 1	1	1/2	1/2				INTER. DIAPHRAGMS
48	1"	2-3/4"	HVY HEX	HVY HEX	1-HW	NOTE 1	1	1/2	1/2				END DIAPHRAGMS
					1								

NOTE 1 - ASTM F3125 GRADE A325 HIGH STRENGTH TYPE 1 (MECH. GALV.)

G4-G5 ASSEMBLY SHOP BOLT PT TO PT LIST

TOTAL QUAN.	DIAM.	BOLTS LENGTH	BOLTS HEAD	BOLTS NUT	BOLTS WASHER	BOLTS BOLT TYPE	GRIP	THICKNESS OF MATERIAL CONNECTED					LOCATION
144	1"	2-3/4"	HVY HEX	HVY HEX	1-HW	NOTE 1	1	1/2	1/2				INTER. DIAPHRAGMS
48	1"	2-3/4"	HVY HEX	HVY HEX	1-HW	NOTE 1	1	1/2	1/2				END DIAPHRAGMS
					1								

NOTE 1 - ASTM F3125 GRADE A325 HIGH STRENGTH TYPE 1 (MECH. GALV.)

G6-G7 ASSEMBLY SHOP BOLT PT TO PT LIST

TOTAL QUAN.	DIAM.	BOLTS LENGTH	BOLTS HEAD	BOLTS NUT	BOLTS WASHER	BOLTS BOLT TYPE	GRIP	THICKNESS OF MATERIAL CONNECTED					LOCATION
144	1"	2-3/4"	HVY HEX	HVY HEX	1-HW	NOTE 1	1	1/2	1/2				INTER. DIAPHRAGMS
48	1"	2-3/4"	HVY HEX	HVY HEX	1-HW	NOTE 1	1	1/2	1/2				END DIAPHRAGMS
					1								

NOTE 1 - ASTM F3125 GRADE A325 HIGH STRENGTH TYPE 1 (MECH. GALV.)

G8-G9 ASSEMBLY SHOP BOLT PT TO PT LIST

TOTAL QUAN.	DIAM.	BOLTS LENGTH	BOLTS HEAD	BOLTS NUT	BOLTS WASHER	BOLTS BOLT TYPE	GRIP	THICKNESS OF MATERIAL CONNECTED					LOCATION
144	1"	2-3/4"	HVY HEX	HVY HEX	1-HW	NOTE 1	1	1/2	1/2				INTER. DIAPHRAGMS
48	1"	2-3/4"	HVY HEX	HVY HEX	1-HW	NOTE 1	1	1/2	1/2				END DIAPHRAGMS
					1								

NOTE 1 - ASTM F3125 GRADE A325 HIGH STRENGTH TYPE 1 (MECH. GALV.)

G10-G11 ASSEMBLY SHOP BOLT PT TO PT LIST

TOTAL QUAN.	DIAM.	BOLTS LENGTH	BOLTS HEAD	BOLTS NUT	BOLTS WASHER	BOLTS BOLT TYPE	GRIP	THICKNESS OF MATERIAL CONNECTED					LOCATION
144	1"	2-3/4"	HVY HEX	HVY HEX	1-HW	NOTE 1	1	1/2	1/2				INTER. DIAPHRAGMS
48	1"	2-3/4"	HVY HEX	HVY HEX	1-HW	NOTE 1	1	1/2	1/2				END DIAPHRAGMS
					1								

NOTE 1 - ASTM F3125 GRADE A325 HIGH STRENGTH TYPE 1 (MECH. GALV.)

G12-G13 ASSEMBLY SHOP BOLT PT TO PT LIST

TOTAL QUAN.	DIAM.	BOLTS LENGTH	BOLTS HEAD	BOLTS NUT	BOLTS WASHER	BOLTS BOLT TYPE	GRIP	THICKNESS OF MATERIAL CONNECTED					LOCATION
144	1"	2-3/4"	HVY HEX	HVY HEX	1-HW	NOTE 1	1	1/2	1/2				INTER. DIAPHRAGMS
48	1"	2-3/4"	HVY HEX	HVY HEX	1-HW	NOTE 1	1	1/2	1/2				END DIAPHRAGMS
					1								

NOTE 1 - ASTM F3125 GRADE A325 HIGH STRENGTH TYPE 1 (MECH. GALV.)

G14-G15 ASSEMBLY SHOP BOLT PT TO PT LIST

TOTAL QUAN.	DIAM.	BOLTS LENGTH	BOLTS HEAD	BOLTS NUT	BOLTS WASHER	BOLTS BOLT TYPE	GRIP	THICKNESS OF MATERIAL CONNECTED					LOCATION
144	1"	2-3/4"	HVY HEX	HVY HEX	1-HW	NOTE 1	1	1/2	1/2				INTER. DIAPHRAGMS
48	1"	2-3/4"	HVY HEX	HVY HEX	1-HW	NOTE 1	1	1/2	1/2				END DIAPHRAGMS
					1								

NOTE 1 - ASTM F3125 GRADE A325 HIGH STRENGTH TYPE 1 (MECH. GALV.)

G16-G17 ASSEMBLY SHOP BOLT PT TO PT LIST

TOTAL QUAN.	DIAM.	BOLTS LENGTH	BOLTS HEAD	BOLTS NUT	BOLTS WASHER	BOLTS BOLT TYPE	GRIP	THICKNESS OF MATERIAL CONNECTED					LOCATION
144	1"	2-3/4"	HVY HEX	HVY HEX	1-HW	NOTE 1	1	1/2	1/2				INTER. DIAPHRAGMS
48	1"	2-3/4"	HVY HEX	HVY HEX	1-HW	NOTE 1	1	1/2	1/2				END DIAPHRAGMS
					1								

NOTE 1 - ASTM F3125 GRADE A325 HIGH STRENGTH TYPE 1 (MECH. GALV.)

G20-G21 ASSEMBLY SHOP BOLT PT TO PT LIST

TOTAL QUAN.	DIAM.	BOLTS LENGTH	BOLTS HEAD	BOLTS NUT	BOLTS WASHER	BOLTS BOLT TYPE	GRIP	THICKNESS OF MATERIAL CONNECTED					LOCATION
120	1"	2-3/4"	HVY HEX	HVY HEX	1-HW	NOTE 1	1	1/2	1/2				INTER. DIAPHRAGMS
48	1"	2-3/4"	HVY HEX	HVY HEX	1-HW	NOTE 1	1	1/2	1/2				END DIAPHRAGMS
					1								

NOTE 1 - ASTM F3125 GRADE A325 HIGH STRENGTH TYPE 1 (MECH. GALV.)

G22-G23 ASSEMBLY SHOP BOLT PT TO PT LIST

TOTAL QUAN.	DIAM.	BOLTS LENGTH	BOLTS HEAD	BOLTS NUT	BOLTS WASHER	BOLTS BOLT TYPE	GRIP	THICKNESS OF MATERIAL CONNECTED					LOCATION
120	1"	2-3/4"	HVY HEX	HVY HEX	1-HW	NOTE 1	1	1/2	1/2				INTER. DIAPHRAGMS
48	1"	2-3/4"	HVY HEX	HVY HEX	1-HW	NOTE 1	1	1/2	1/2				END DIAPHRAGMS
					1								

NOTE 1 - ASTM F3125 GRADE A325 HIGH STRENGTH TYPE 1 (MECH. GALV.)

G24-G25 ASSEMBLY SHOP BOLT PT TO PT LIST

TOTAL QUAN.	DIAM.	BOLTS LENGTH	BOLTS HEAD	BOLTS NUT	BOLTS WASHER	BOLTS BOLT TYPE	GRIP	THICKNESS OF MATERIAL CONNECTED					LOCATION
120	1"	2-3/4"	HVY HEX	HVY HEX	1-HW	NOTE 1	1	1/2	1/2				INTER. DIAPHRAGMS
48	1"	2-3/4"	HVY HEX	HVY HEX	1-HW	NOTE 1	1	1/2	1/2				END DIAPHRAGMS
					1								

NOTE 1 - ASTM F3125 GRADE A325 HIGH STRENGTH TYPE 1 (MECH. GALV.)

G26-G27 ASSEMBLY SHOP BOLT PT TO PT LIST

TOTAL QUAN.	DIAM.	BOLTS LENGTH	BOLTS HEAD	BOLTS NUT	BOLTS WASHER	BOLTS BOLT TYPE	GRIP	THICKNESS OF MATERIAL CONNECTED					LOCATION
120	1"	2-3/4"	HVY HEX	HVY HEX	1-HW	NOTE 1	1	1/2	1/2				INTER. DIAPHRAGMS
48	1"	2-3/4"	HVY HEX	HVY HEX	1-HW	NOTE 1	1	1/2	1/2				END DIAPHRAGMS
					1								

NOTE 1 - ASTM F3125 GRADE A325 HIGH STRENGTH TYPE 1 (MECH. GALV.)

G28-G29 ASSEMBLY SHOP BOLT PT TO PT LIST

TOTAL QUAN.	DIAM.	BOLTS LENGTH	BOLTS HEAD	BOLTS NUT	BOLTS WASHER	BOLTS BOLT TYPE	GRIP	THICKNESS OF MATERIAL CONNECTED					LOCATION
120	1"	2-3/4"	HVY HEX	HVY HEX	1-HW	NOTE 1	1	1/2	1/2				INTER. DIAPHRAGMS
48	1"	2-3/4"	HVY HEX	HVY HEX	1-HW	NOTE 1	1	1/2	1/2				END DIAPHRAGMS
					1								

NOTE 1 - ASTM F3125 GRADE A325 HIGH STRENGTH TYPE 1 (MECH. GALV.)

G30-G31 ASSEMBLY SHOP BOLT PT TO PT LIST

TOTAL QUAN.	DIAM.	BOLTS LENGTH	BOLTS HEAD	BOLTS NUT	BOLTS WASHER	BOLTS BOLT TYPE	GRIP	THICKNESS OF MATERIAL CONNECTED					LOCATION
120	1"	2-3/4"	HVY HEX	HVY HEX	1-HW	NOTE 1	1	1/2	1/2				INTER. DIAPHRAGMS
48	1"	2-3/4"	HVY HEX	HVY HEX	1-HW	NOTE 1	1	1/2	1/2				END DIAPHRAGMS
					1								

NOTE 1 - ASTM F3125 GRADE A325 HIGH STRENGTH TYPE 1 (MECH. GALV.)

G32-G33 ASSEMBLY SHOP BOLT PT TO PT LIST

TOTAL QUAN.	DIAM.	BOLTS LENGTH	BOLTS HEAD	BOLTS NUT	BOLTS WASHER	BOLTS BOLT TYPE	GRIP	THICKNESS OF MATERIAL CONNECTED					LOCATION
120	1"	2-3/4"	HVY HEX	HVY HEX	1-HW	NOTE 1	1	1/2	1/2				INTER. DIAPHRAGMS
48	1"	2-3/4"	HVY HEX	HVY HEX	1-HW	NOTE 1	1	1/2	1/2				END DIAPHRAGMS
					1								

NOTE 1 - ASTM F3125 GRADE A325 HIGH STRENGTH TYPE 1 (MECH. GALV.)

G34-G35 ASSEMBLY SHOP BOLT PT TO PT LIST

TOTAL QUAN.	DIAM.	BOLTS LENGTH	BOLTS HEAD	BOLTS NUT	BOLTS WASHER	BOLTS BOLT TYPE	GRIP	THICKNESS OF MATERIAL CONNECTED					LOCATION
120	1"	2-3/4"	HVY HEX	HVY HEX	1-HW	NOTE 1	1	1/2	1/2				INTER. DIAPHRAGMS
48	1"	2-3/4"	HVY HEX	HVY HEX	1-HW	NOTE 1	1	1/2	1/2				END DIAPHRAGMS
					1								

NOTE 1 - ASTM F3125 GRADE A325 HIGH STRENGTH TYPE 1 (MECH. GALV.)

REV / RELEASE RECORD		
1	REVISION TO SHOP BOLTS	08-11-20
0	FINAL APPROVAL / PROD.	06-21-19
A	FINAL APPROVAL	06-21-19

SHOP ASSY BOLT LISTS

WABASH

WABASH STEEL COMPANY, LLC
2007 OLIPHANT DRIVE
VINCENNES, INDIANA 47591

Drawn	Checked	Approved	Revised
DMW 4-01-19	DJW 4-03-19		

PROJECT NO. CUY-IR490/SR 010-2.09/19.28
SFN: 1801519 ~ REF. NO. 20
PID NO. 96833
BR. NO. CUY-010-2039
NORFOLK SOUTHERN RAILROAD OVER OH-10
CUYAHOGA COUNTY, OHIO
CONTRACTOR: KOKOSING
OWNER: OHIO DEPARTMENT OF TRANSPORTATION

Shop Paint:
Edge Dist.: Holes:
WSLLC No.: 179-18 Sh. SB1 of 1

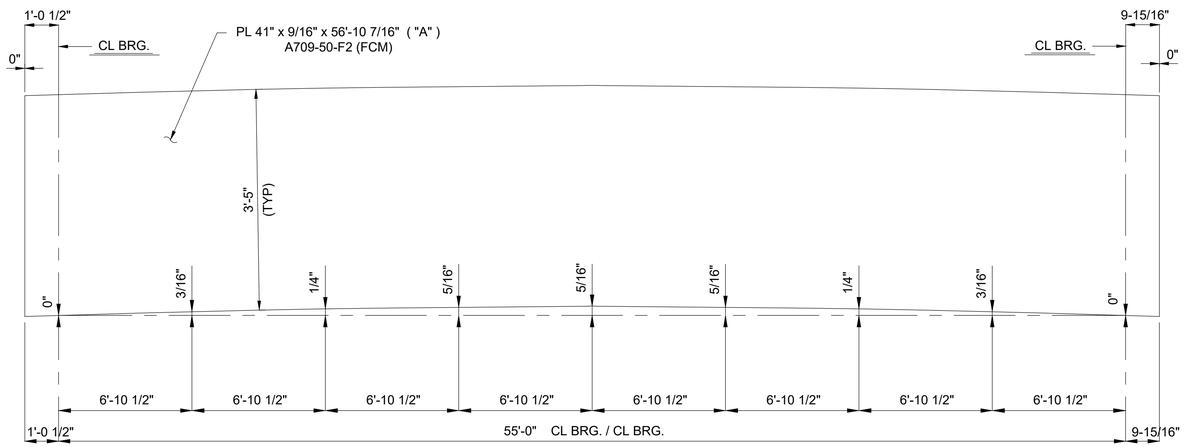

WEB CUTTING DIAGRAM - SPAN 2 EXTERIOR GIRDERS

MARK	QUAN	"A"
1G1A	ONE	a1
18G18A	ONE	a18

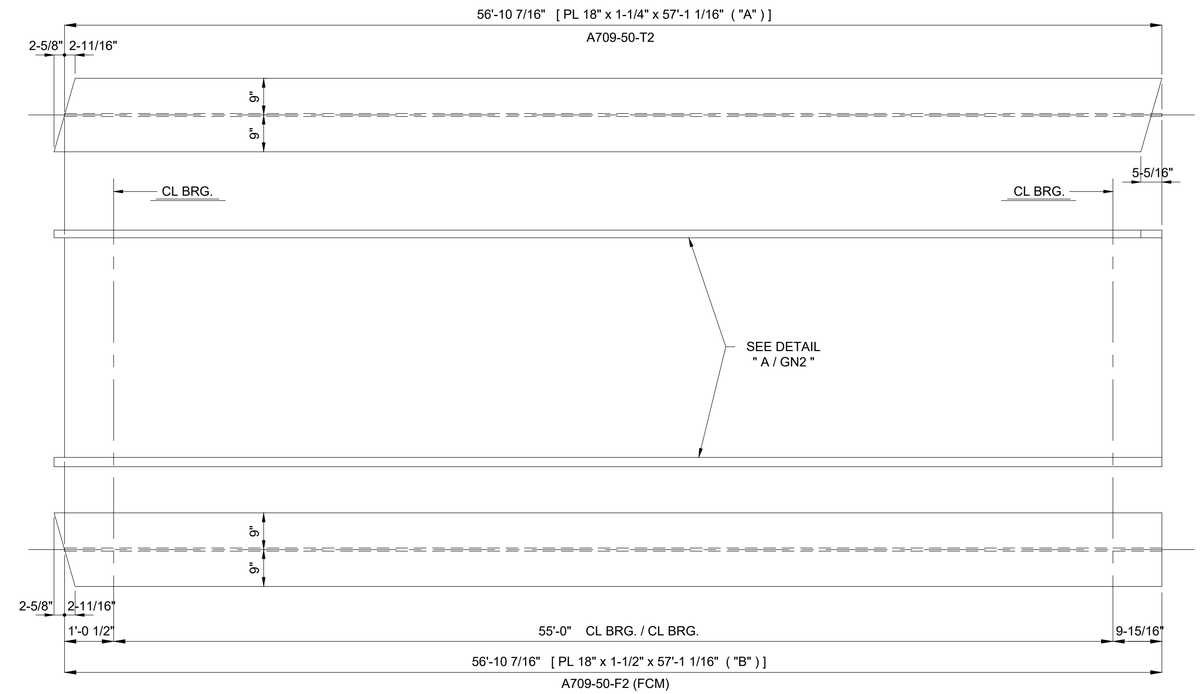

FLANGE ASSEMBLY DIAGRAM - SPAN 2 EXTERIOR GIRDERS

MARK	QUAN	"A"	"B"
1G1A	ONE	b1	c1
18G18A	ONE	b18	c18

SHOP NOTES:

1) SEE SHEET GN1 THRU GN3 FOR GENERAL NOTES AND DETAILS.
2) SEE SHEET GN2 FOR GIRDER ASSEMBLY WELD DETAILS.

REV / RELEASE RECORD		
0	FINAL APPROVAL / PROD.	09-20-19
C	FINAL APPROVAL	06-21-19
B	REL. FOR APPROVAL	05-23-19
A	REL. FOR INTERNAL REVIEW	04-08-19

WEB CUTTING DIAGRAMS AND
FLANGE ASSEMBLY DIAGRAMS

WABASH

WABASH STEEL COMPANY, LLC
2007 OLIPHANT DRIVE
VINCENNES, INDIANA 47591

Drawn	Checked	Approved	Revised
DMW 3-21-19	DJW 3-25-19		

PROJECT NO. CUY-IR490/SR 010-2.09/19.28
SFN: 1801519 ~ REF. NO. 20
PID NO. 96833
BR. NO. CUY-010-2039
NORFOLK SOUTHERN RAILROAD OVER OH-10
CUYAHOGA COUNTY, OHIO
CONTRACTOR: KOKOSING
OWNER: OHIO DEPARTMENT OF TRANSPORTATION

Shop Paint:
Edge Distance: Holes:
WSLLC No.: 179-18 Sh. C1 of 4

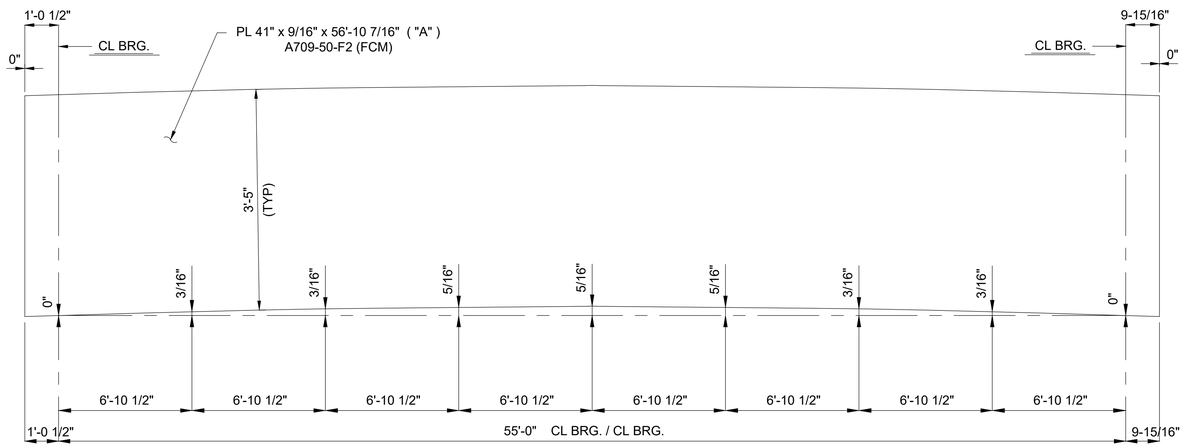

WEB CUTTING DIAGRAM - SPAN 2 INTERIOR GIRDERS

MARK	QUAN	"A"
2G2A	ONE	a2
3G3A	ONE	a3
4G4A	ONE	a4
5G5A	ONE	a5
6G6A	ONE	a6
7G7A	ONE	a7
8G8A	ONE	a8
9G9A	ONE	a9
10G10A	ONE	a10
11G11A	ONE	a11
12G12A	ONE	a12
13G13A	ONE	a13
14G14A	ONE	a14
15G15A	ONE	a15
16G16A	ONE	a16
17G17A	ONE	a17

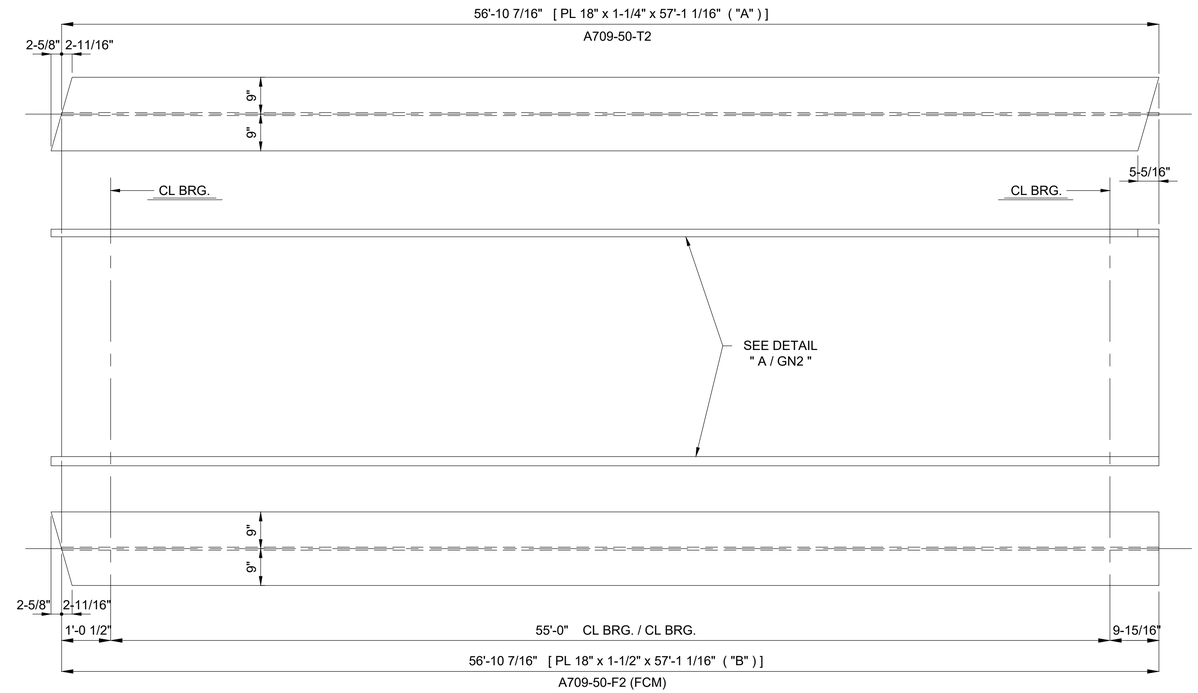

FLANGE ASSEMBLY DIAGRAM - SPAN 2 INTERIOR GIRDERS

MARK	QUAN	"A"	"B"
2G2A	ONE	b2	c2
3G3A	ONE	b3	c3
4G4A	ONE	b4	c4
5G5A	ONE	b5	c5
6G6A	ONE	b6	c6
7G7A	ONE	b7	c7
8G8A	ONE	b8	c8
9G9A	ONE	b9	c9
10G10A	ONE	b10	c10
11G11A	ONE	b11	c11
12G12A	ONE	b12	c12
13G13A	ONE	b13	c13
14G14A	ONE	b14	c14
15G15A	ONE	b15	c15
16G16A	ONE	b16	c16
17G17A	ONE	b17	c17

SHOP NOTES:

1) SEE SHEET GN1 THRU GN3 FOR GENERAL NOTES AND DETAILS.
2) SEE SHEET GN2 FOR GIRDER ASSEMBLY WELD DETAILS.

REV / RELEASE RECORD		
0	FINAL APPROVAL / PROD.	09-20-19
C	FINAL APPROVAL	06-21-19
B	REL. FOR APPROVAL	05-23-19
A	REL. FOR INTERNAL REVIEW	04-08-19

WEB CUTTING DIAGRAMS AND
FLANGE ASSEMBLY DIAGRAMS

WABASH

WABASH STEEL COMPANY, LLC
2007 OLIPHANT DRIVE
VINCENNES, INDIANA 47591

Drawn	Checked	Approved	Revised
DMW 3-21-19	DJW 3-25-19		

PROJECT NO. CUY-IR490/SR 010-2.09/19.28
SFN: 1801519 ~ REF. NO. 20
PID NO. 96833
BR. NO. CUY-010-2039
NORFOLK SOUTHERN RAILROAD OVER OH-10
CUYAHOGA COUNTY, OHIO
CONTRACTOR: KOKOSING
OWNER: OHIO DEPARTMENT OF TRANSPORTATION

Shop Paint:
Edge Distance: Holes:
WSLLC No.: 179-18 Sh. C2 of 4

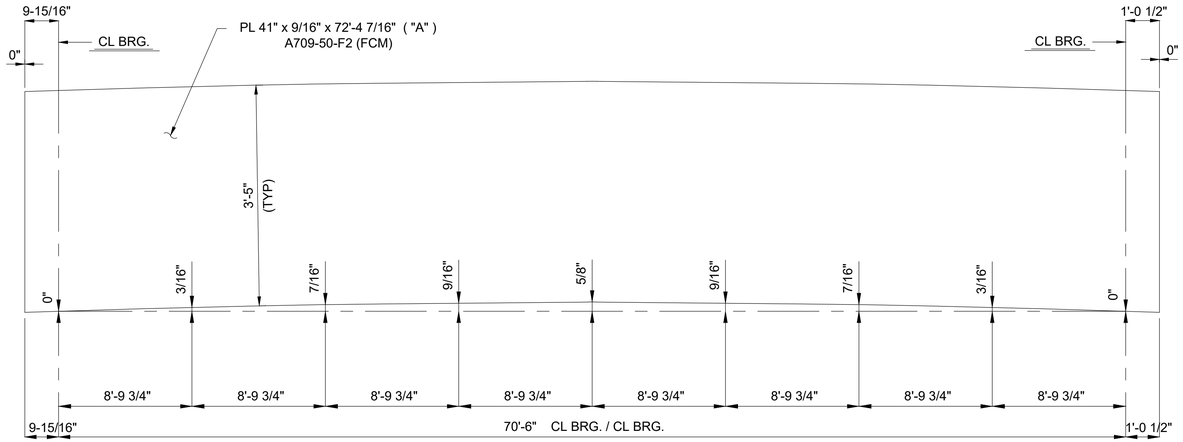

WEB CUTTING DIAGRAM - SPAN 1 EXTERIOR GIRDERS

MARK	QUAN	"A"
19G1B	ONE	a19
36G18B	ONE	a36

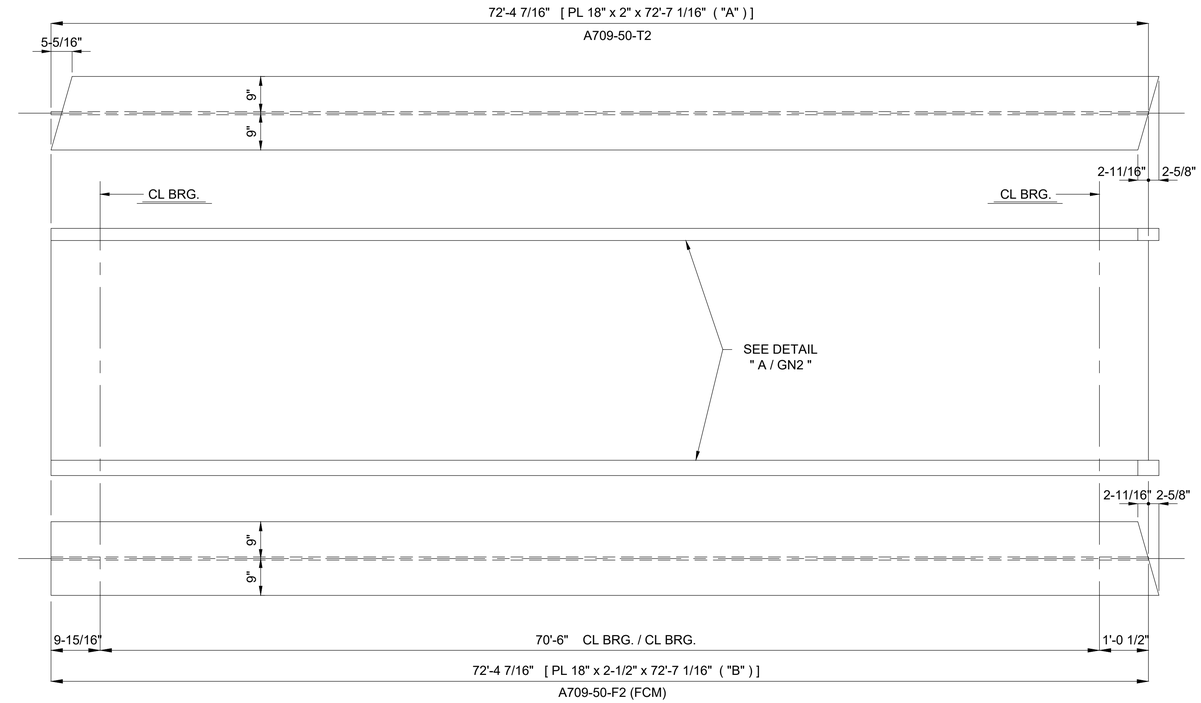

FLANGE ASSEMBLY DIAGRAM - SPAN 1 EXTERIOR GIRDERS

MARK	QUAN	"A"	"B"
19G1B	ONE	b19	c19
36G18B	ONE	b36	c36

SHOP NOTES:

1) SEE SHEET GN1 THRU GN3 FOR GENERAL NOTES AND DETAILS.
2) SEE SHEET GN2 FOR GIRDER ASSEMBLY WELD DETAILS.

REV / RELEASE RECORD		
0	FINAL APPROVAL / PROD.	09-20-19
C	FINAL APPROVAL	06-21-19
B	REL. FOR APPROVAL	05-23-19
A	REL. FOR INTERNAL REVIEW	04-08-19

WEB CUTTING DIAGRAMS AND
FLANGE ASSEMBLY DIAGRAMS

WABASH

WABASH STEEL COMPANY, LLC
2007 OLIPHANT DRIVE
VINCENNES, INDIANA 47591

Drawn	Checked	Approved	Revised
DMW 3-21-19	DJW 3-25-19		

PROJECT NO. CUY-IR490/SR 010-2.09/19.28
SFN: 1801519 ~ REF. NO. 20
PID NO. 96833
BR. NO. CUY-010-2039
NORFOLK SOUTHERN RAILROAD OVER OH-10
CUYAHOGA COUNTY, OHIO
CONTRACTOR: KOKOSING
OWNER: OHIO DEPARTMENT OF TRANSPORTATION

Shop Paint:

Edge Distance: Holes:

WSLLC No.: 179-18 Sh. C3 of 4

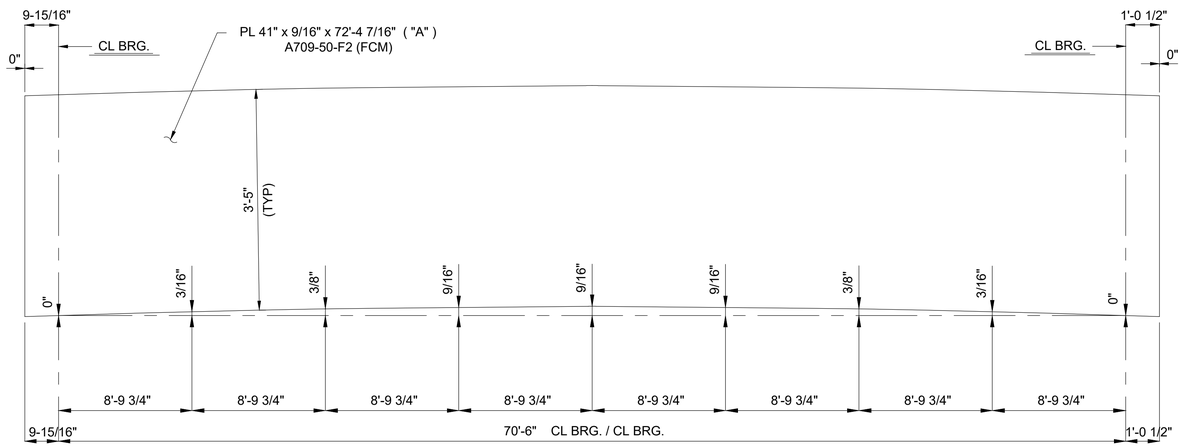

WEB CUTTING DIAGRAM - SPAN 1 INTERIOR GIRDERS

MARK	QUAN	"A"
20G2B	ONE	a20
21G3B	ONE	a21
22G4B	ONE	a22
23G5B	ONE	a23
24G6B	ONE	a24
25G7B	ONE	a25
26G8B	ONE	a26
27G9B	ONE	a27
28G10B	ONE	a28
29G11B	ONE	a29
30G12B	ONE	a30
31G13B	ONE	a31
32G14B	ONE	a32
33G15B	ONE	a33
34G16B	ONE	a34
35G17B	ONE	a35

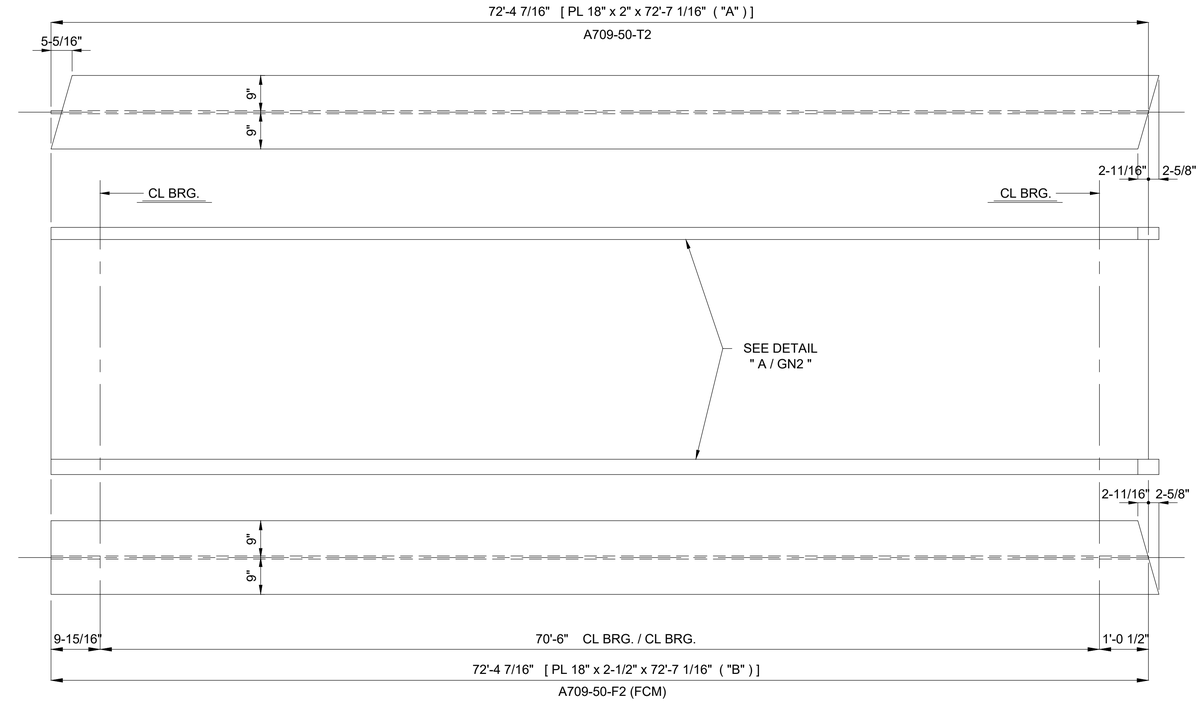

FLANGE ASSEMBLY DIAGRAM - SPAN 1 INTERIOR GIRDERS

MARK	QUAN	"A"	"B"
20G2B	ONE	b20	c20
21G3B	ONE	b21	c21
22G4B	ONE	b22	c22
23G5B	ONE	b23	c23
24G6B	ONE	b24	c24
25G7B	ONE	b25	c25
26G8B	ONE	b26	c26
27G9B	ONE	b27	c27
28G10B	ONE	b28	c28
29G11B	ONE	b29	c29
30G12B	ONE	b30	c30
31G13B	ONE	b31	c31
32G14B	ONE	b32	c32
33G15B	ONE	b33	c33
34G16B	ONE	b34	c34
35G17B	ONE	b35	c35

SHOP NOTES:

1) SEE SHEET GN1 THRU GN3 FOR GENERAL NOTES AND DETAILS.
2) SEE SHEET GN2 FOR GIRDER ASSEMBLY WELD DETAILS.

REV / RELEASE RECORD		
0	FINAL APPROVAL / PROD.	09-20-19
C	FINAL APPROVAL	06-21-19
B	REL. FOR APPROVAL	05-23-19
A	REL. FOR INTERNAL REVIEW	04-08-19

WEB CUTTING DIAGRAMS AND
FLANGE ASSEMBLY DIAGRAMS

WABASH

WABASH STEEL COMPANY, LLC
2007 OLIPHANT DRIVE
VINCENNES, INDIANA 47591

Drawn	Checked	Approved	Revised
DMW 3-21-19	DJW 3-25-19		

PROJECT NO. CUY-IR490/SR 010-2.09/19.28
SFN: 1801519 ~ REF. NO. 20
PID NO. 96833
BR. NO. CUY-010-2039
NORFOLK SOUTHERN RAILROAD OVER OH-10
CUYAHOGA COUNTY, OHIO
CONTRACTOR: KOKOSING
OWNER: OHIO DEPARTMENT OF TRANSPORTATION

Shop Paint:
Edge Distance: Holes:
WSLLC No.: 179-18 Sh. C4 of 4

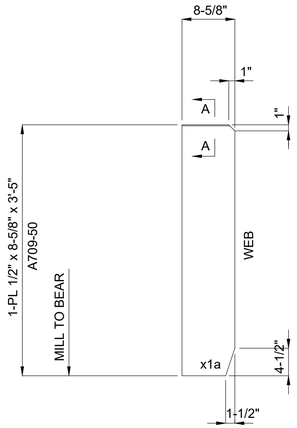

DETAIL OF PL (x1a)

(8 REQ'D)

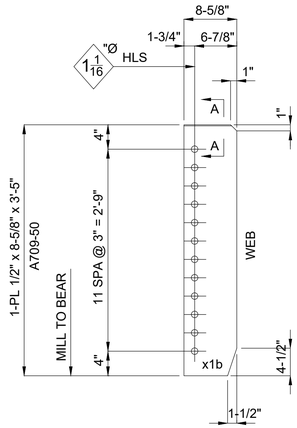

DETAIL OF PL (x1b)

(136 REQ'D)

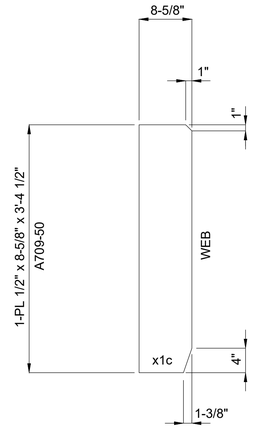

DETAIL OF PL (x1c)

(144 REQ'D)

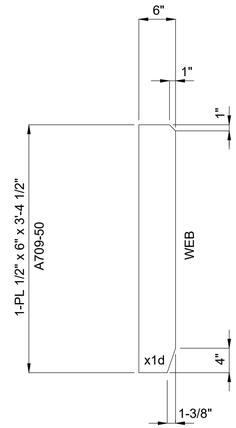

DETAIL OF PL (x1d)

(1010 REQ'D)

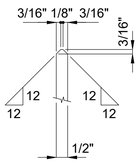

SECTION "A-A"

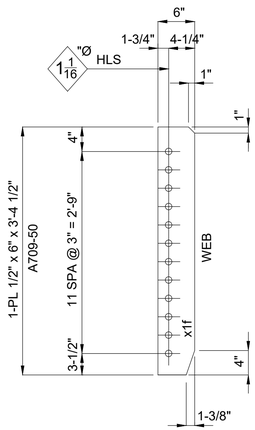

DETAIL OF PL (x1f)

(359 REQ'D)

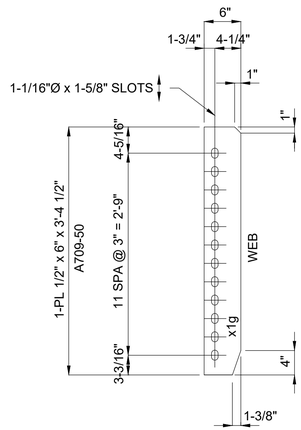

DETAIL OF PL (x1g)

(11 REQ'D)

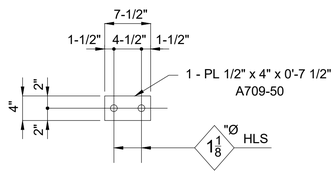

DETAIL OF PL (x1h)

(1524 REQ'D)

SHOP NOTES:

1) SEE SHEET GN1 THRU GN3 FOR GENERAL NOTES AND PAINT NOTES.

REV / RELEASE RECORD		
0	FINAL APPROVAL / PROD.	9-20-19
C	FINAL APPROVAL	6-21-19
B	REL. FOR APPROVAL	5-23-19
A	REL. FOR INTERNAL REVIEW	4-08-19

GIRDER STANDARDS

WABASH

WABASH STEEL COMPANY, LLC
2007 OLIPHANT DRIVE
VINCENNES, INDIANA 47591

Drawn	Checked	Approved	Revised
DMW 3-20-19	DJW 3-25-19		

PROJECT NO. CUY-IR490/SR 010-2.09/19.28
SFN: 1801519 ~ REF. NO. 20
PID NO. 96833
BR. NO. CUY-010-2039
NORFOLK SOUTHERN RAILROAD OVER OH-10
CUYAHOGA COUNTY, OHIO
CONTRACTOR: KOKOSING
OWNER: OHIO DEPARTMENT OF TRANSPORTATION

Shop Paint: See GN1 thru GN3

Edge Distance: AS NOTED | Holes: 1-1/16"Ø UNO

WSLLC No.: 179-18 | Sh. X1 of 1

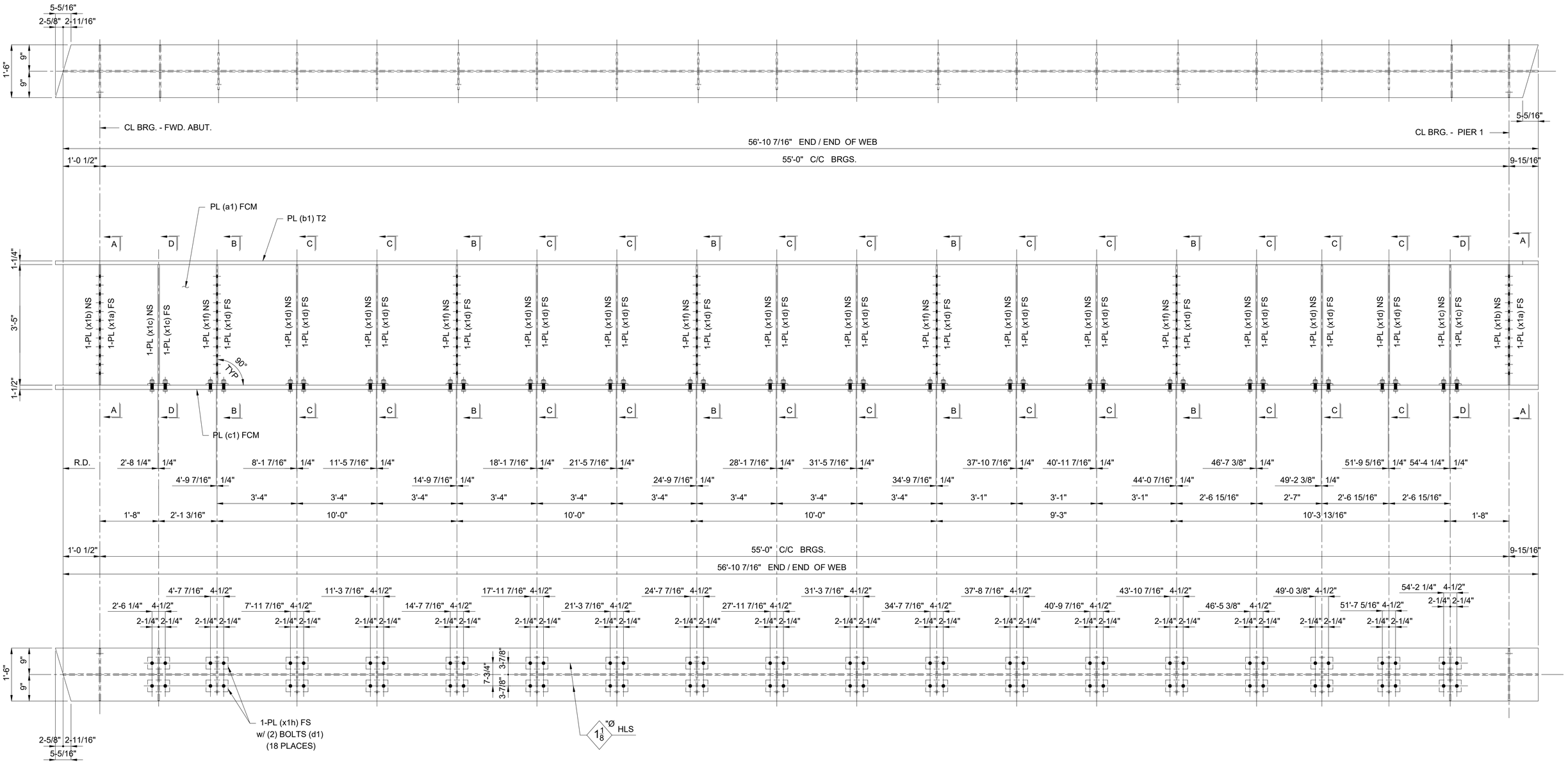

ONE - GIRDER - 1G1A

SHOP NOTES:

1) SEE SHEET X1 FOR GIRDER STANDARDS.
2) SEE SHEET C1 FOR WEB CUTTING DIAGRAM AND FLANGE ASSEMBLY DIAGRAM.
3) SEE SHEET GN1 THRU GN3 FOR GENERAL NOTES AND PAINT NOTES.
4) SEE SHEET GN2 FOR GIRDER ASSEMBLY WELD DETAILS AND WELD TERMINATION DETAILS.
5) SEE SHEET 1B FOR B.O.M.

REV / RELEASE RECORD		
0	FINAL APPROVAL / PROD.	09-20-19
C	FINAL APPROVAL	06-21-19
B	REL. FOR APPROVAL	05-23-19
A	REL. FOR INTERNAL REVIEW	04-08-19

GIRDER 1G1A

WABASH

WABASH STEEL COMPANY, LLC
2007 OLIPHANT DRIVE
VINCENNES, INDIANA 47591

Drawn	Checked	Approved	Revised
DMW 3-22-19	DJW 3-26-19		

PROJECT NO. CUY-IR490/SR 010-2.09/19.28
SFN: 1801519 ~ REF. NO. 20
PID NO. 96833
BR. NO. CUY-010-2039
NORFOLK SOUTHERN RAILROAD OVER OH-10
CUYAHOGA COUNTY, OHIO
CONTRACTOR: KOKOSING
OWNER: OHIO DEPARTMENT OF TRANSPORTATION

Shop Paint: See Dwg. GN1 thru GN3

Edge Distance: AS NOTED | Holes: 1-1/16"Ø U.N.O.

WSLLC No.: 179-18 | Sh. 1AB

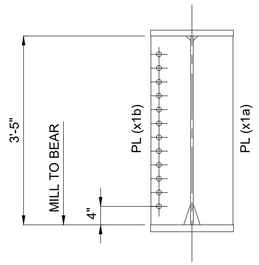

SECTION "A-A"

(2 PLACES)

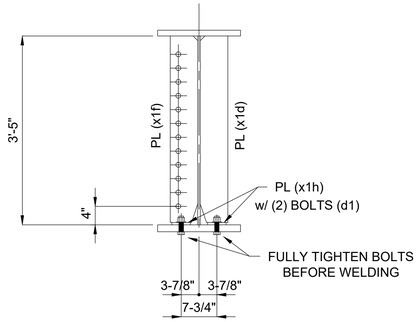

SECTION "B-B"

(5 PLACES)

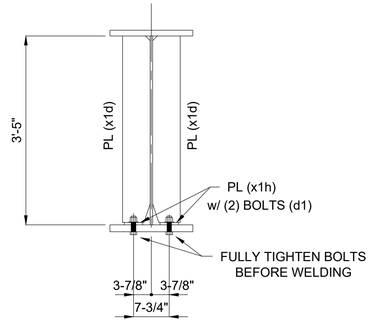

SECTION "C-C"

(11 PLACES)

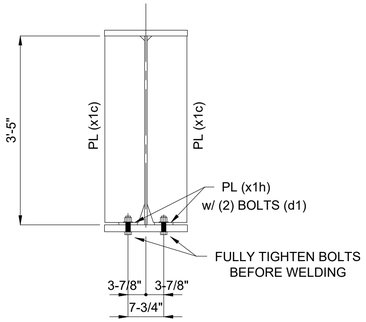

SECTION "D-D"

(2 PLACES)

BILL OF MATERIAL

Kind	Section	Length	Req.	Mark	Grade	Remarks
		GIRDERS	1	1G1A		(15 852 #)
PL	41" x 9/16"	56'-10 7/16"	1	a1	A709-50-F2	4 469
PL	18" x 1-1/4"	57'-1 1/16"	1	b1	A709-50-T2	4 367
PL	18" x 1-1/2"	57'-1 1/16"	1	c1	A709-50-F2	5 241
BOLT	1" HSBN1W	0'-3 3/4"	72	d1	F3125 HS TYPE 1 (GALV)	120
PL	8-5/8" x 1/2"	3'-5"	2	x1a	A709-50	100
PL	8-5/8" x 1/2"	3'-5"	2	x1b	A709-50	100
PL	8-5/8" x 1/2"	3'-4 1/2"	4	x1c	A709-50	198
PL	6" x 1/2"	3'-4 1/2"	27	x1d	A709-50	932
PL	6" x 1/2"	3'-4 1/2"	5	x1f	A709-50	172
PL	4" x 1/2"	0'-7 1/2"	36	x1h	A709-50	153

1

ONE - GIRDER - 1G1A

SHOP NOTES:

1) SEE SHEET X1 FOR GIRDER STANDARDS.
2) SEE SHEET C1 FOR WEB CUTTING DIAGRAM AND FLANGE ASSEMBLY DIAGRAM.
3) SEE SHEET GN1 THRU GN3 FOR GENERAL NOTES AND PAINT NOTES.
4) SEE SHEET GN2 FOR GIRDER ASSEMBLY WELD DETAILS AND WELD TERMINATION DETAILS.

1	REVISIONS TO SHOP BOLTS	08-11-20

REV / RELEASE RECORD		
0	FINAL APPROVAL / PROD.	09-20-19
C	FINAL APPROVAL	06-21-19
B	REL. FOR APPROVAL	05-23-19
A	REL. FOR INTERNAL REVIEW	04-08-19

GIRDER 1G1A

WABASH

WABASH STEEL COMPANY, LLC
2007 OLIPHANT DRIVE
VINCENNES, INDIANA 47591

Drawn	Checked	Approved	Revised
DMW 3-22-19	DJW 3-26-19		

PROJECT NO. CUY-IR490/SR 010-2.09/19.28
SFN: 1801519 ~ REF. NO. 20
PID NO. 96833
BR. NO. CUY-010-2039
NORFOLK SOUTHERN RAILROAD OVER OH-10
CUYAHOGA COUNTY, OHIO
CONTRACTOR: KOKOSING
OWNER: OHIO DEPARTMENT OF TRANSPORTATION

Shop Paint: See Dwg. GN1 thru GN3

Edge Distance: AS NOTED | Holes: 1-1/16"Ø U.N.O.

WSLLC No.: 179-18 | Sh. 1B

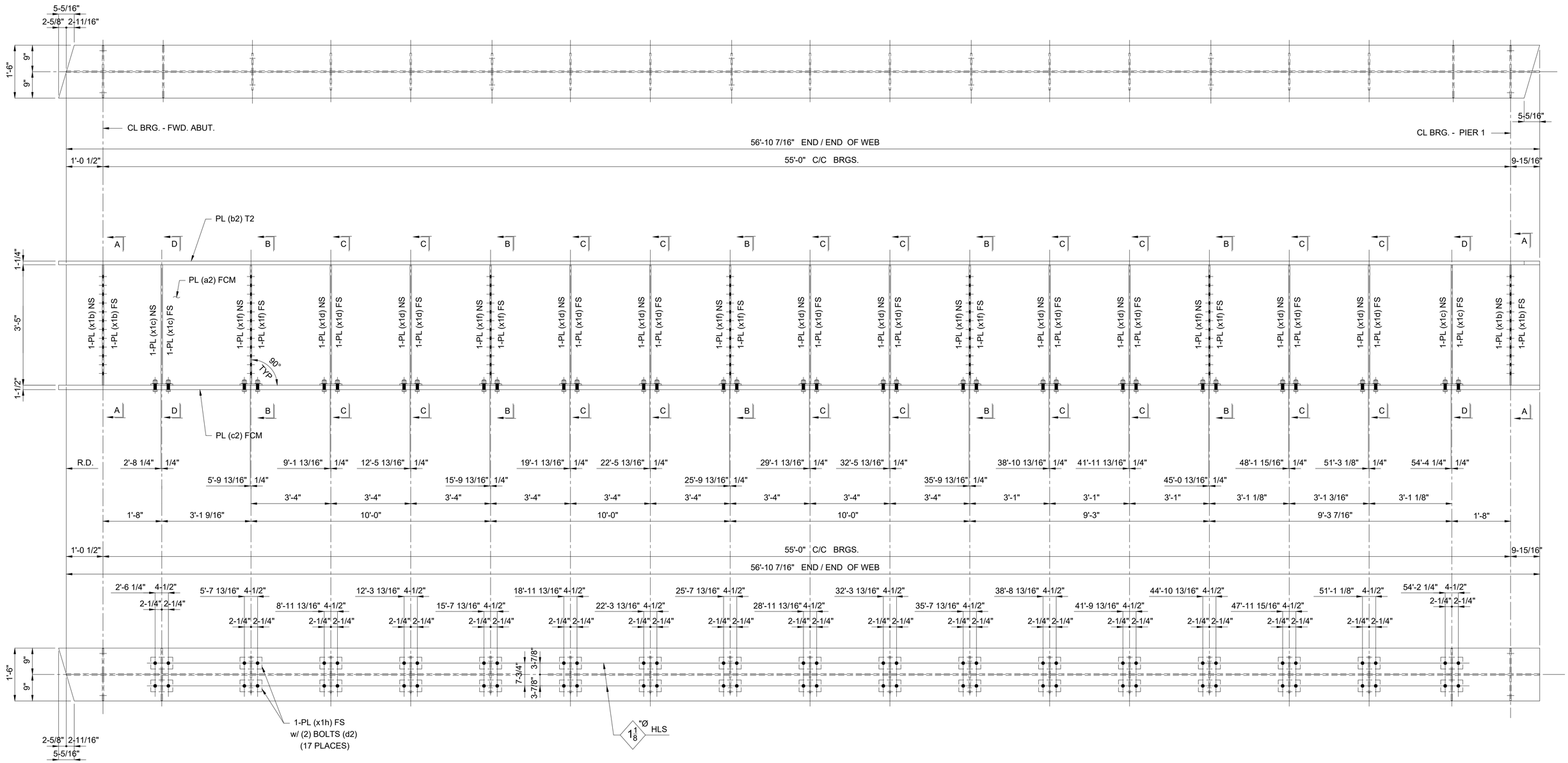

ONE - GIRDER - 2G2A

SHOP NOTES:

1) SEE SHEET X1 FOR GIRDER STANDARDS.
2) SEE SHEET C2 FOR WEB CUTTING DIAGRAM AND FLANGE ASSEMBLY DIAGRAM.
3) SEE SHEET GN1 THRU GN3 FOR GENERAL NOTES AND PAINT NOTES.
4) SEE SHEET GN2 FOR GIRDER ASSEMBLY WELD DETAILS AND WELD TERMINATION DETAILS.
5) SEE SHEET 2B FOR B.O.M.

REV / RELEASE RECORD		
0	FINAL APPROVAL / PROD.	09-20-19
C	FINAL APPROVAL	06-21-19
B	REL. FOR APPROVAL	05-23-19
A	REL. FOR INTERNAL REVIEW	04-08-19

GIRDER 2G2A

WABASH

WABASH STEEL COMPANY, LLC
2007 OLIPHANT DRIVE
VINCENNES, INDIANA 47591

Drawn	Checked	Approved	Revised
DMW 3-22-19	DJW 3-26-19		

PROJECT NO. CUY-IR490/SR 010-2.09/19.28
SFN: 1801519 ~ REF. NO. 20
PID NO. 96833
BR. NO. CUY-010-2039
NORFOLK SOUTHERN RAILROAD OVER OH-10
CUYAHOGA COUNTY, OHIO
CONTRACTOR: KOKOSING
OWNER: OHIO DEPARTMENT OF TRANSPORTATION

Shop Paint: See Dwg. GN1 thru GN3

Edge Distance: AS NOTED | Holes: 1-1/16"Ø U.N.O.

WSLLC No.: 179-18 | Sh. 2AB

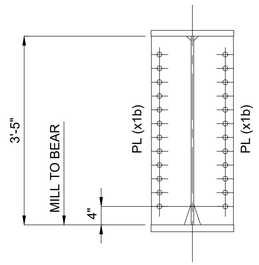

SECTION "A-A"

(2 PLACES)

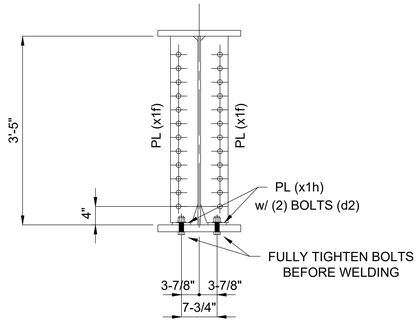

SECTION "B-B"

(5 PLACES)

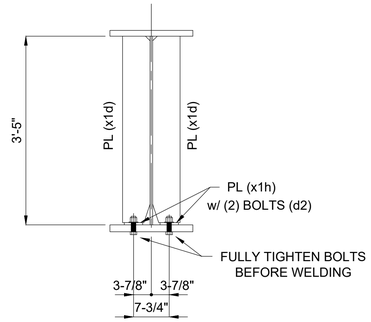

SECTION "C-C"

(10 PLACES)

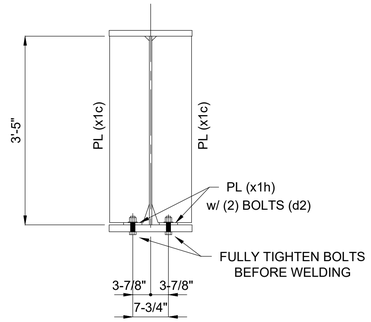

SECTION "D-D"

(2 PLACES)

BILL OF MATERIAL

Kind	Section	Length	Req.	Mark	Grade	Remarks
		GIRDERS	1	2G2A		(15 768 #)
PL	41" x 9/16"	56'-10 7/16"	1	a2	A709-50-F2	4 469
PL	18" x 1-1/4"	57'-1 1/16"	1	b2	A709-50-T2	4 367
PL	18" x 1-1/2"	57'-1 1/16"	1	c2	A709-50-F2	5 241
BOLT	1" HSBN1W	0'-3 3/4"	68	d2	F3125 HS TYPE 1 (GALV)	113
PL	8-5/8" x 1/2"	3'-5"	4	x1b	A709-50	200
PL	8-5/8" x 1/2"	3'-4 1/2"	4	x1c	A709-50	198
PL	6" x 1/2"	3'-4 1/2"	20	x1d	A709-50	690
PL	6" x 1/2"	3'-4 1/2"	10	x1f	A709-50	345
PL	4" x 1/2"	0'-7 1/2"	34	x1h	A709-50	145

1

ONE - GIRDER - 2G2A

SHOP NOTES:

1) SEE SHEET X1 FOR GIRDER STANDARDS.
2) SEE SHEET C2 FOR WEB CUTTING DIAGRAM AND FLANGE ASSEMBLY DIAGRAM.
3) SEE SHEET GN1 THRU GN3 FOR GENERAL NOTES AND PAINT NOTES.
4) SEE SHEET GN2 FOR GIRDER ASSEMBLY WELD DETAILS AND WELD TERMINATION DETAILS.

1	REVISIONS TO SHOP BOLTS	08-11-20

REV / RELEASE RECORD

0	FINAL APPROVAL / PROD.	09-20-19
C	FINAL APPROVAL	06-21-19
B	REL. FOR APPROVAL	05-23-19
A	REL. FOR INTERNAL REVIEW	04-08-19

GIRDER 2G2A

WABASH

WABASH STEEL COMPANY, LLC
2007 OLIPHANT DRIVE
VINCENNES, INDIANA 47591

Drawn	Checked	Approved	Revised
DMW 3-22-19	DJW 3-26-19		

PROJECT NO. CUY-IR490/SR 010-2.09/19.28
SFN: 1801519 ~ REF. NO. 20
PID NO. 96833
BR. NO. CUY-010-2039
NORFOLK SOUTHERN RAILROAD OVER OH-10
CUYAHOGA COUNTY, OHIO
CONTRACTOR: KOKOSING
OWNER: OHIO DEPARTMENT OF TRANSPORTATION

Shop Paint: See Dwg. GN1 thru GN3

Edge Distance: AS NOTED | Holes: 1-1/16"Ø U.N.O.

WSLLC No.: 179-18 | Sh. 2B

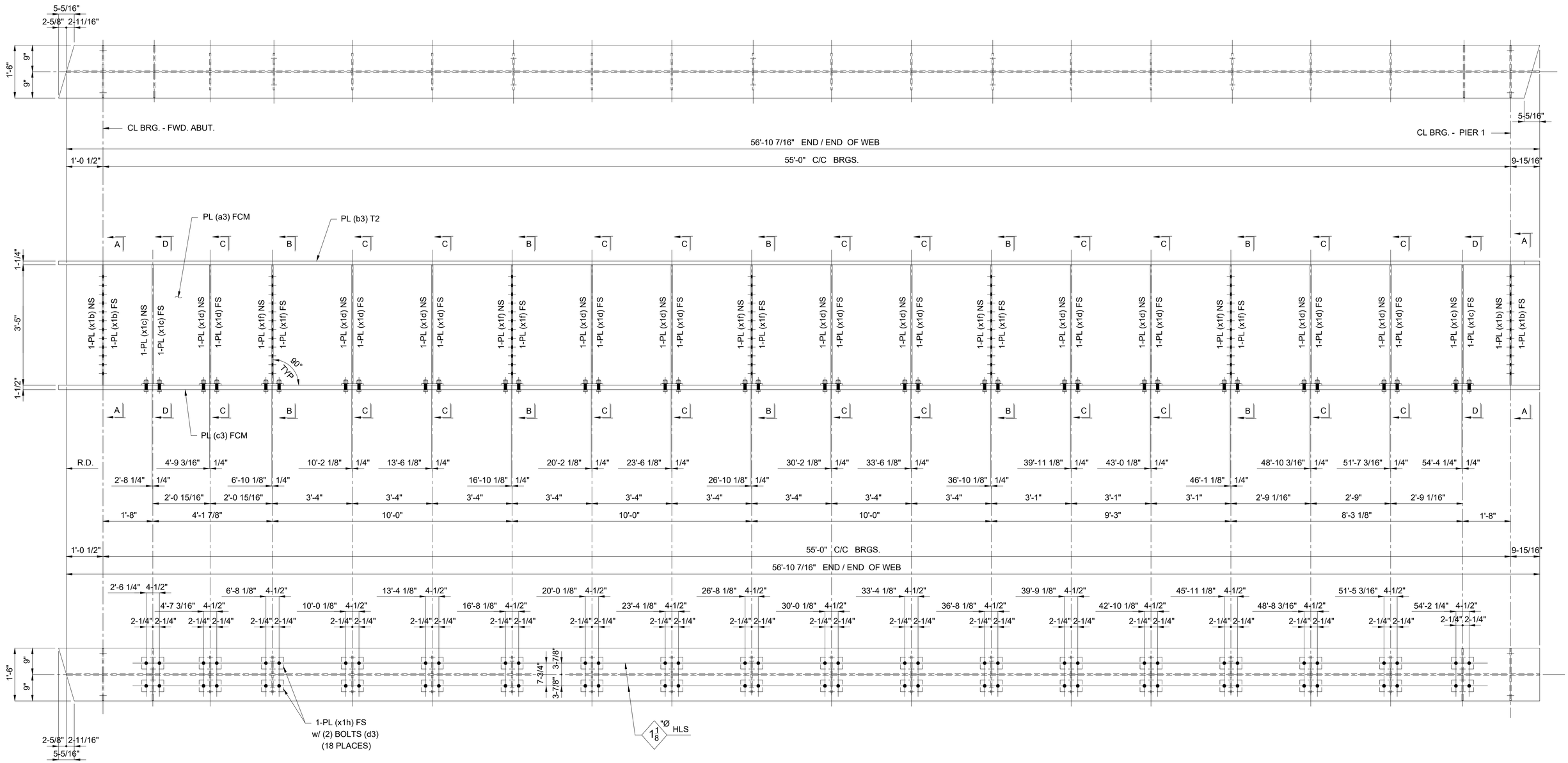

ONE - GIRDER - 3G3A

SHOP NOTES:

1) SEE SHEET X1 FOR GIRDER STANDARDS.
2) SEE SHEET C2 FOR WEB CUTTING DIAGRAM AND FLANGE ASSEMBLY DIAGRAM.
3) SEE SHEET GN1 THRU GN3 FOR GENERAL NOTES AND PAINT NOTES.
4) SEE SHEET GN2 FOR GIRDER ASSEMBLY WELD DETAILS AND WELD TERMINATION DETAILS.
5) SEE SHEET 3B FOR B.O.M.

REV / RELEASE RECORD		
0	FINAL APPROVAL / PROD.	09-20-19
C	FINAL APPROVAL	06-21-19
B	REL. FOR APPROVAL	05-23-19
A	REL. FOR INTERNAL REVIEW	04-08-19

GIRDER 3G3A

WABASH

WABASH STEEL COMPANY, LLC
2007 OLIPHANT DRIVE
VINCENNES, INDIANA 47591

Drawn	Checked	Approved	Revised
DMW 3-22-19	DJW 3-26-19		

PROJECT NO. CUY-IR490/SR 010-2.09/19.28
SFN: 1801519 ~ REF. NO. 20
PID NO. 96833
BR. NO. CUY-010-2039
NORFOLK SOUTHERN RAILROAD OVER OH-10
CUYAHOGA COUNTY, OHIO
CONTRACTOR: KOKOSING
OWNER: OHIO DEPARTMENT OF TRANSPORTATION

Shop Paint: See Dwg. GN1 thru GN3

Edge Distance: AS NOTED | Holes: 1-1/16"Ø U.N.O.

WSLLC No.: 179-18 | Sh. 3AB

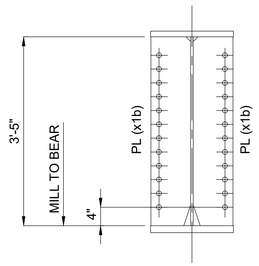

SECTION "A-A"

(2 PLACES)

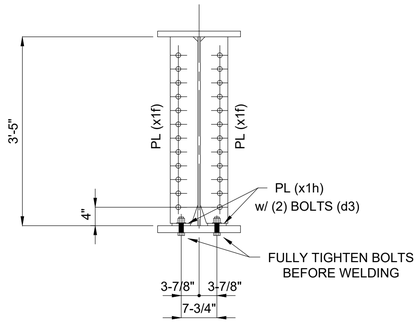

SECTION "B-B"

(5 PLACES)

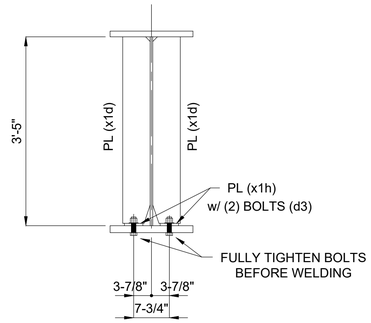

SECTION "C-C"

(11 PLACES)

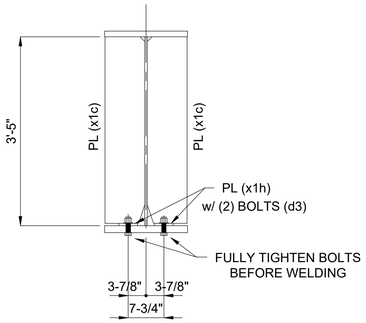

SECTION "D-D"

(2 PLACES)

BILL OF MATERIAL

Kind	Section	Length	Req.	Mark	Grade	Remarks
		GIRDERS	1	3G3A		(15 852 #)
PL	41" x 9/16"	56'-10 7/16"	1	a3	A709-50-F2	4 469
PL	18" x 1-1/4"	57'-1 1/16"	1	b3	A709-50-T2	4 367
PL	18" x 1-1/2"	57'-1 1/16"	1	c3	A709-50-F2	5 241
BOLT	1" HSBN1W	0'-3 3/4"	72	d3	F3125 HS TYPE 1 (GALV)	120
PL	8-5/8" x 1/2"	3'-5"	4	x1b	A709-50	200
PL	8-5/8" x 1/2"	3'-4 1/2"	4	x1c	A709-50	198
PL	6" x 1/2"	3'-4 1/2"	22	x1d	A709-50	759
PL	6" x 1/2"	3'-4 1/2"	10	x1f	A709-50	345
PL	4" x 1/2"	0'-7 1/2"	36	x1h	A709-50	153

1

ONE - GIRDER - 3G3A

SHOP NOTES:

1) SEE SHEET X1 FOR GIRDER STANDARDS.
2) SEE SHEET C2 FOR WEB CUTTING DIAGRAM AND FLANGE ASSEMBLY DIAGRAM.
3) SEE SHEET GN1 THRU GN3 FOR GENERAL NOTES AND PAINT NOTES.
4) SEE SHEET GN2 FOR GIRDER ASSEMBLY WELD DETAILS AND WELD TERMINATION DETAILS.

1	REVISIONS TO SHOP BOLTS	08-11-20

REV / RELEASE RECORD

0	FINAL APPROVAL / PROD.	09-20-19
C	FINAL APPROVAL	06-21-19
B	REL. FOR APPROVAL	05-23-19
A	REL. FOR INTERNAL REVIEW	04-08-19

GIRDER 3G3A

WABASH

WABASH STEEL COMPANY, LLC
2007 OLIPHANT DRIVE
VINCENNES, INDIANA 47591

Drawn	Checked	Approved	Revised
DMW 3-22-19	DJW 3-26-19		

PROJECT NO. CUY-IR490/SR 010-2.09/19.28
SFN: 1801519 ~ REF. NO. 20
PID NO. 96833
BR. NO. CUY-010-2039
NORFOLK SOUTHERN RAILROAD OVER OH-10
CUYAHOGA COUNTY, OHIO
CONTRACTOR: KOKOSING
OWNER: OHIO DEPARTMENT OF TRANSPORTATION

Shop Paint: See Dwg. GN1 thru GN3

Edge Distance: AS NOTED | Holes: 1-1/16"Ø U.N.O.

WSLLC No.: 179-18 | Sh. 3B

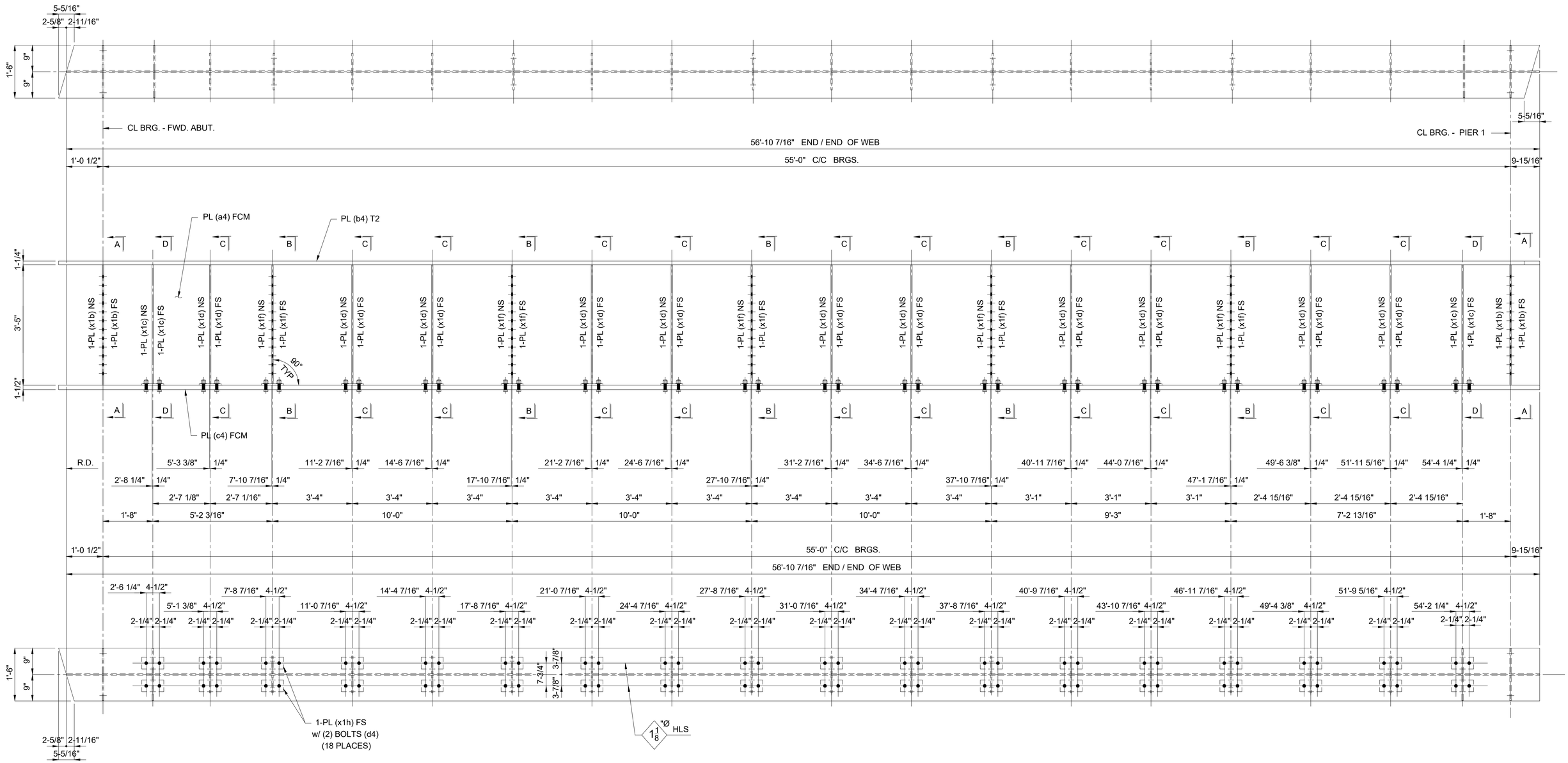

ONE - GIRDER - 4G4A

SHOP NOTES:

1) SEE SHEET X1 FOR GIRDER STANDARDS.
2) SEE SHEET C2 FOR WEB CUTTING DIAGRAM AND FLANGE ASSEMBLY DIAGRAM.
3) SEE SHEET GN1 THRU GN3 FOR GENERAL NOTES AND PAINT NOTES.
4) SEE SHEET GN2 FOR GIRDER ASSEMBLY WELD DETAILS AND WELD TERMINATION DETAILS.
5) SEE SHEET 4B FOR B.O.M.

REV / RELEASE RECORD		
0	FINAL APPROVAL / PROD.	09-20-19
C	FINAL APPROVAL	06-21-19
B	REL. FOR APPROVAL	05-23-19
A	REL. FOR INTERNAL REVIEW	04-08-19

GIRDER 4G4A

WABASH

WABASH STEEL COMPANY, LLC
2007 OLIPHANT DRIVE
VINCENNES, INDIANA 47591

Drawn	Checked	Approved	Revised
DMW 3-22-19	DJW 3-26-19		

PROJECT NO. CUY-IR490/SR 010-2.09/19.28
SFN: 1801519 ~ REF. NO. 20
PID NO. 96833
BR. NO. CUY-010-2039
NORFOLK SOUTHERN RAILROAD OVER OH-10
CUYAHOGA COUNTY, OHIO
CONTRACTOR: KOKOSING
OWNER: OHIO DEPARTMENT OF TRANSPORTATION

Shop Paint: See Dwg. GN1 thru GN3

Edge Distance: AS NOTED | Holes: 1-1/16"Ø U.N.O.

WSLLC No.: 179-18 | Sh. 4AB

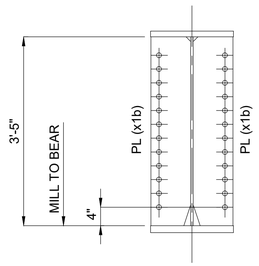

SECTION "A-A"

(2 PLACES)

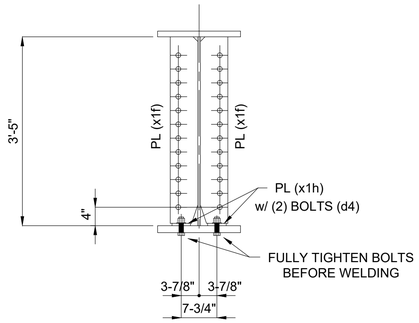

SECTION "B-B"

(5 PLACES)

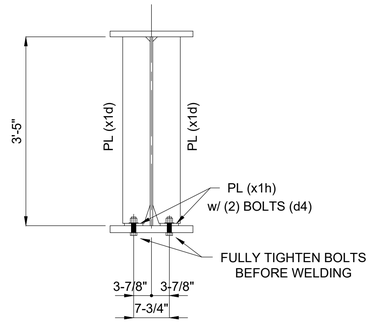

SECTION "C-C"

(11 PLACES)

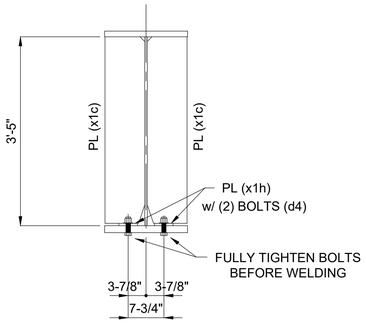

SECTION "D-D"

(2 PLACES)

BILL OF MATERIAL

Kind	Section	Length	Req.	Mark	Grade	Remarks
		GIRDERS	1	4G4A		(15 852 #)
PL	41" x 9/16"	56'-10 7/16"	1	a4	A709-50-F2	4 469
PL	18" x 1-1/4"	57'-1 1/16"	1	b4	A709-50-T2	4 367
PL	18" x 1-1/2"	57'-1 1/16"	1	c4	A709-50-F2	5 241
BOLT	1" HSBN1W	0'-3 3/4"	72	d4	F3125 HS TYPE 1 (GALV)	120
PL	8-5/8" x 1/2"	3'-5"	4	x1b	A709-50	200
PL	8-5/8" x 1/2"	3'-4 1/2"	4	x1c	A709-50	198
PL	6" x 1/2"	3'-4 1/2"	22	x1d	A709-50	759
PL	6" x 1/2"	3'-4 1/2"	10	x1f	A709-50	345
PL	4" x 1/2"	0'-7 1/2"	36	x1h	A709-50	153

1

ONE - GIRDER - 4G4A

SHOP NOTES:

1) SEE SHEET X1 FOR GIRDER STANDARDS.
2) SEE SHEET C2 FOR WEB CUTTING DIAGRAM AND FLANGE ASSEMBLY DIAGRAM.
3) SEE SHEET GN1 THRU GN3 FOR GENERAL NOTES AND PAINT NOTES.
4) SEE SHEET GN2 FOR GIRDER ASSEMBLY WELD DETAILS AND WELD TERMINATION DETAILS.

1	REVISIONS TO SHOP BOLTS	08-11-20

REV / RELEASE RECORD

0	FINAL APPROVAL / PROD.	09-20-19
C	FINAL APPROVAL	06-21-19
B	REL. FOR APPROVAL	05-23-19
A	REL. FOR INTERNAL REVIEW	04-08-19

GIRDER 4G4A

WABASH

WABASH STEEL COMPANY, LLC
2007 OLIPHANT DRIVE
VINCENNES, INDIANA 47591

Drawn	Checked	Approved	Revised
DMW 3-22-19	DJW 3-26-19		

PROJECT NO. CUY-IR490/SR 010-2.09/19.28
SFN: 1801519 ~ REF. NO. 20
PID NO. 96833
BR. NO. CUY-010-2039
NORFOLK SOUTHERN RAILROAD OVER OH-10
CUYAHOGA COUNTY, OHIO
CONTRACTOR: KOKOSING
OWNER: OHIO DEPARTMENT OF TRANSPORTATION

Shop Paint: See Dwg. GN1 thru GN3

Edge Distance: AS NOTED | Holes: 1-1/16"Ø U.N.O.

WSLLC No.: 179-18 | Sh. 4B

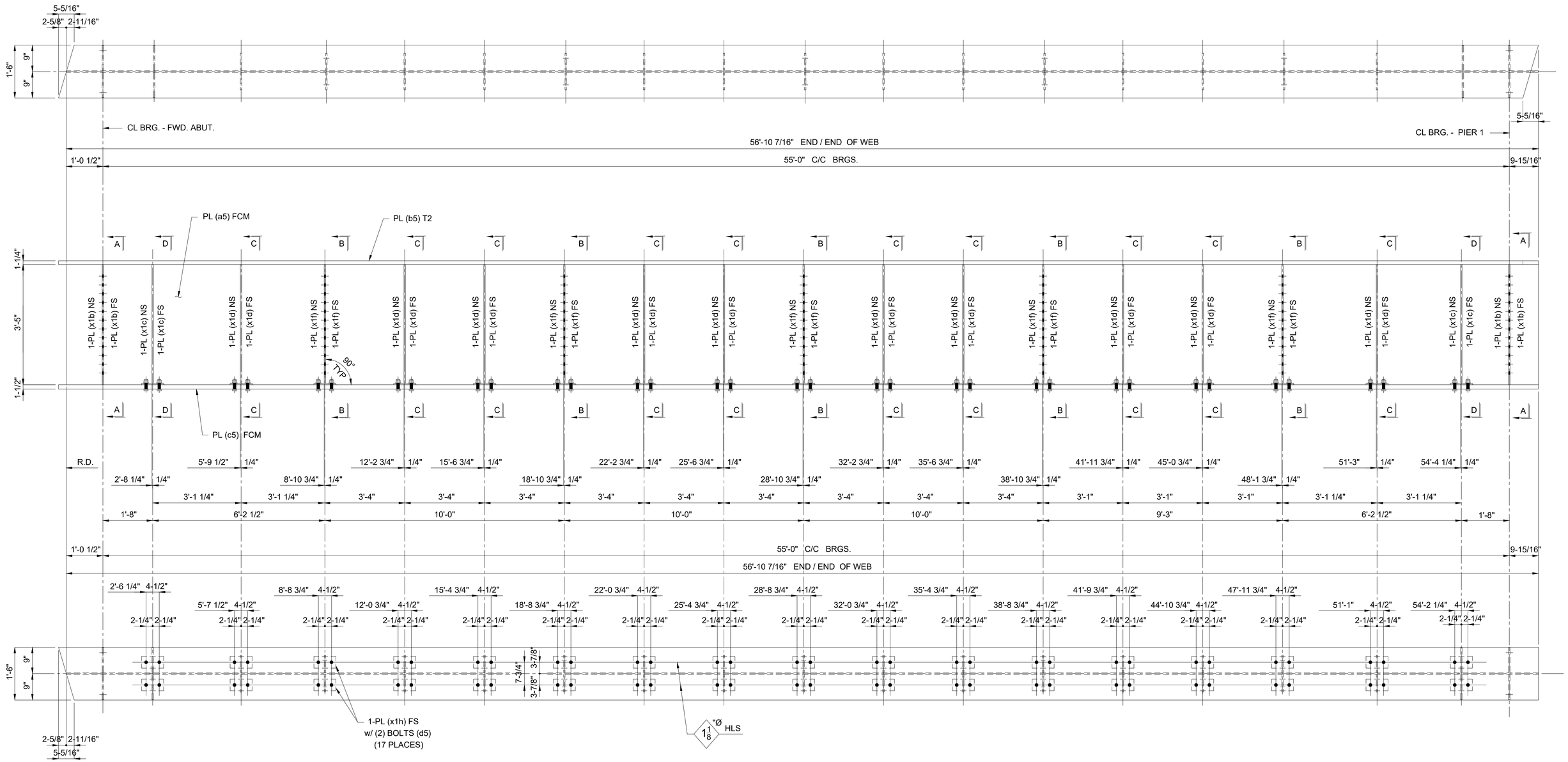

ONE - GIRDER - 5G5A

SHOP NOTES:

1) SEE SHEET X1 FOR GIRDER STANDARDS.
2) SEE SHEET C2 FOR WEB CUTTING DIAGRAM AND FLANGE ASSEMBLY DIAGRAM.
3) SEE SHEET GN1 THRU GN3 FOR GENERAL NOTES AND PAINT NOTES.
4) SEE SHEET GN2 FOR GIRDER ASSEMBLY WELD DETAILS AND WELD TERMINATION DETAILS.
5) SEE SHEET 5B FOR B.O.M.

REV / RELEASE RECORD		
0	FINAL APPROVAL / PROD.	09-20-19
C	FINAL APPROVAL	06-21-19
B	REL. FOR APPROVAL	05-23-19
A	REL. FOR INTERNAL REVIEW	04-08-19

GIRDER 5G5A

WABASH

WABASH STEEL COMPANY, LLC
2007 OLIPHANT DRIVE
VINCENNES, INDIANA 47591

Drawn	Checked	Approved	Revised
DMW 3-22-19	DJW 3-26-19		

PROJECT NO. CUY-IR490/SR 010-2.09/19.28
SFN: 1801519 ~ REF. NO. 20
PID NO. 96833
BR. NO. CUY-010-2039
NORFOLK SOUTHERN RAILROAD OVER OH-10
CUYAHOGA COUNTY, OHIO
CONTRACTOR: KOKOSING
OWNER: OHIO DEPARTMENT OF TRANSPORTATION

Shop Paint: See Dwg. GN1 thru GN3
Edge Distance: AS NOTED Holes: 1-1/16"Ø U.N.O.
WSLLC No.: 179-18 Sh. 5AB

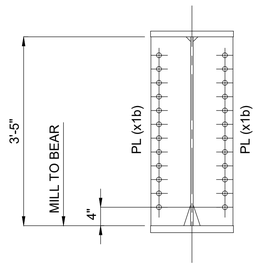

SECTION "A-A"

(2 PLACES)

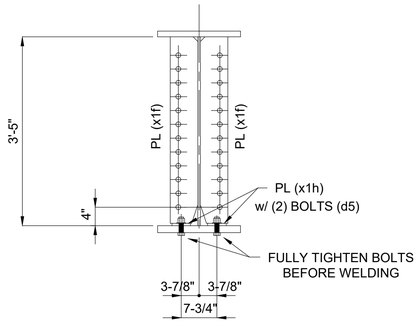

SECTION "B-B"

(5 PLACES)

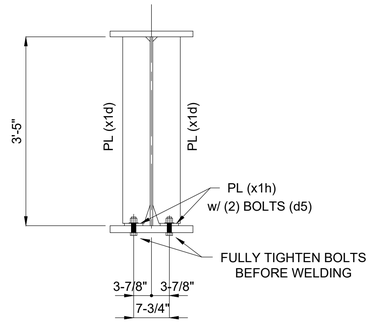

SECTION "C-C"

(10 PLACES)

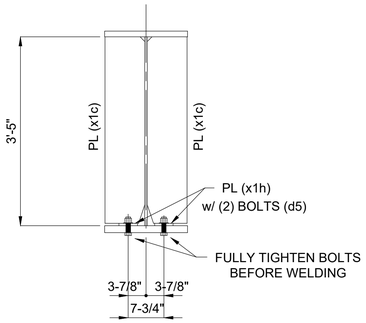

SECTION "D-D"

(2 PLACES)

BILL OF MATERIAL

Kind	Section	Length	Req.	Mark	Grade	Remarks
		GIRDERS	1	5G5A		(15 768 #)
PL	41" x 9/16"	56'-10 7/16"	1	a5	A709-50-F2	4 469
PL	18" x 1-1/4"	57'-1 1/16"	1	b5	A709-50-T2	4 367
PL	18" x 1-1/2"	57'-1 1/16"	1	c5	A709-50-F2	5 241
BOLT	1" HSBN1W	0'-3 3/4"	68	d5	F3125 HS TYPE 1 (GALV)	113
PL	8-5/8" x 1/2"	3'-5"	4	x1b	A709-50	200
PL	8-5/8" x 1/2"	3'-4 1/2"	4	x1c	A709-50	198
PL	6" x 1/2"	3'-4 1/2"	20	x1d	A709-50	690
PL	6" x 1/2"	3'-4 1/2"	10	x1f	A709-50	345
PL	4" x 1/2"	0'-7 1/2"	34	x1h	A709-50	145

1

ONE - GIRDER - 5G5A

SHOP NOTES:

1) SEE SHEET X1 FOR GIRDER STANDARDS.
2) SEE SHEET C2 FOR WEB CUTTING DIAGRAM AND FLANGE ASSEMBLY DIAGRAM.
3) SEE SHEET GN1 THRU GN3 FOR GENERAL NOTES AND PAINT NOTES.
4) SEE SHEET GN2 FOR GIRDER ASSEMBLY WELD DETAILS AND WELD TERMINATION DETAILS.

1	REVISIONS TO SHOP BOLTS	08-11-20

REV / RELEASE RECORD

0	FINAL APPROVAL / PROD.	09-20-19
C	FINAL APPROVAL	06-21-19
B	REL. FOR APPROVAL	05-23-19
A	REL. FOR INTERNAL REVIEW	04-08-19

GIRDER 5G5A

WABASH

WABASH STEEL COMPANY, LLC
2007 OLIPHANT DRIVE
VINCENNES, INDIANA 47591

Drawn	Checked	Approved	Revised
DMW 3-22-19	DJW 3-26-19		

PROJECT NO. CUY-IR490/SR 010-2.09/19.28
SFN: 1801519 ~ REF. NO. 20
PID NO. 96833
BR. NO. CUY-010-2039
NORFOLK SOUTHERN RAILROAD OVER OH-10
CUYAHOGA COUNTY, OHIO
CONTRACTOR: KOKOSING
OWNER: OHIO DEPARTMENT OF TRANSPORTATION

Shop Paint: See Dwg. GN1 thru GN3

Edge Distance: AS NOTED | Holes: 1-1/16"Ø U.N.O.

WSLLC No.: 179-18 | Sh. 5B

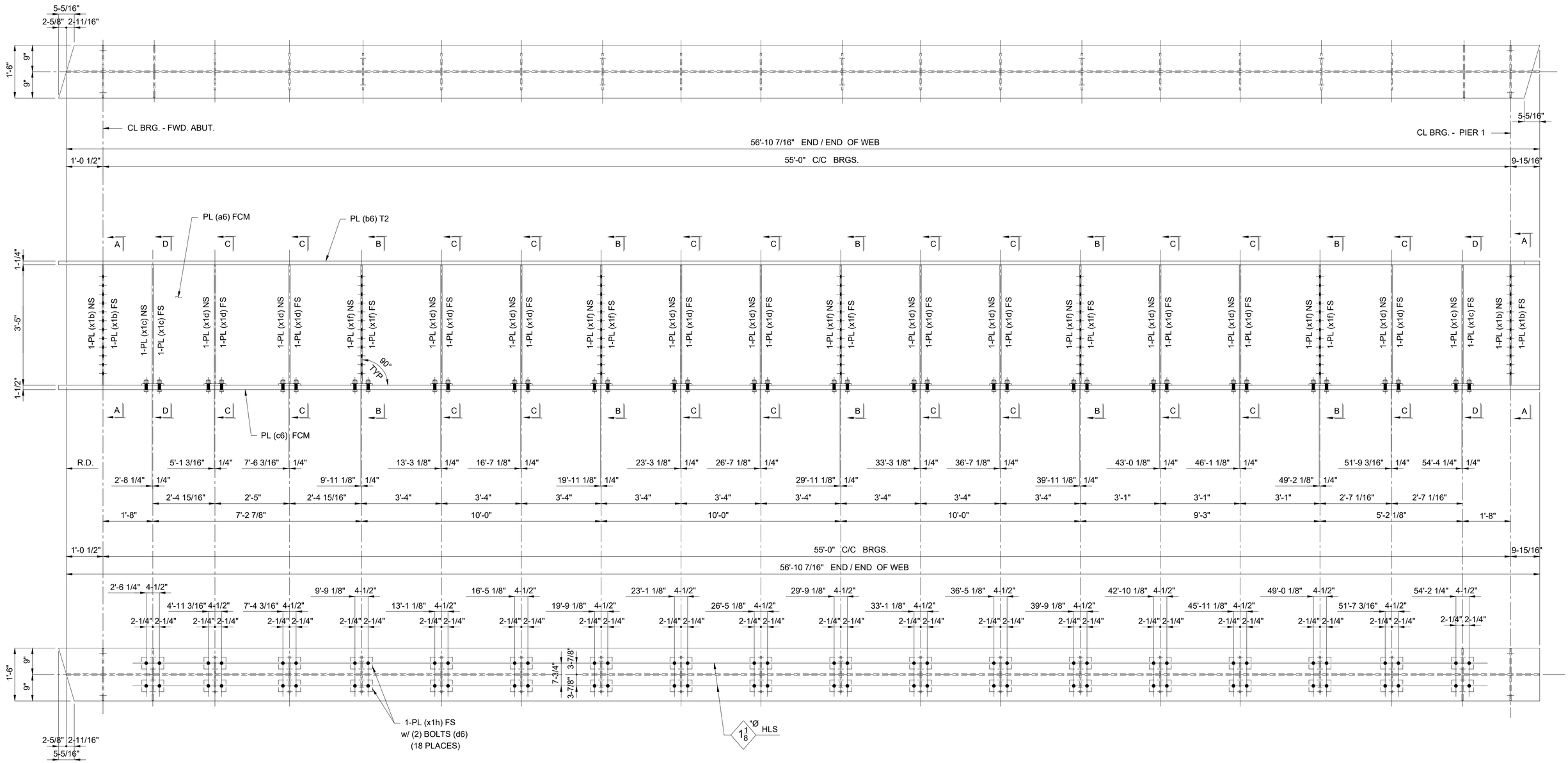

ONE - GIRDER - 6G6A

SHOP NOTES:

1) SEE SHEET X1 FOR GIRDER STANDARDS.
2) SEE SHEET C2 FOR WEB CUTTING DIAGRAM AND FLANGE ASSEMBLY DIAGRAM.
3) SEE SHEET GN1 THRU GN3 FOR GENERAL NOTES AND PAINT NOTES.
4) SEE SHEET GN2 FOR GIRDER ASSEMBLY WELD DETAILS AND WELD TERMINATION DETAILS.
5) SEE SHEET 6B FOR B.O.M.

REV / RELEASE RECORD

0	FINAL APPROVAL / PROD.	09-20-19
C	FINAL APPROVAL	06-21-19
B	REL. FOR APPROVAL	05-23-19
A	REL. FOR INTERNAL REVIEW	04-08-19

GIRDER 6G6A

WABASH

WABASH STEEL COMPANY, LLC
2007 OLIPHANT DRIVE
VINCENNES, INDIANA 47591

Drawn	Checked	Approved	Revised
DMW 3-23-19	DJW 3-26-19		

PROJECT NO. CUY-IR490/SR 010-2.09/19.28
SFN: 1801519 ~ REF. NO. 20
PID NO. 96833
BR. NO. CUY-010-2039
NORFOLK SOUTHERN RAILROAD OVER OH-10
CUYAHOGA COUNTY, OHIO
CONTRACTOR: KOKOSING
OWNER: OHIO DEPARTMENT OF TRANSPORTATION

Shop Paint: See Dwg. GN1 thru GN3

Edge Distance: AS NOTED | Holes: 1-1/16"Ø U.N.O.

WSLLC No.: 179-18 | Sh. 6AB

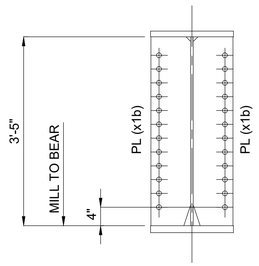

SECTION "A-A"

(2 PLACES)

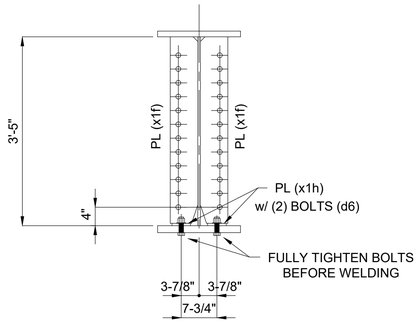

SECTION "B-B"

(5 PLACES)

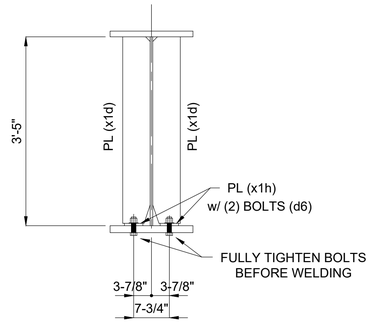

SECTION "C-C"

(11 PLACES)

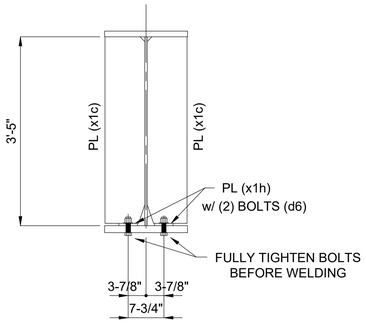

SECTION "D-D"

(2 PLACES)

BILL OF MATERIAL

Kind	Section	Length	Req.	Mark	Grade	Remarks
		GIRDERS	1	6G6A		(15 852 #)
PL	41" x 9/16"	56'-10 7/16"	1	a6	A709-50-F2	4 469
PL	18" x 1-1/4"	57'-1 1/16"	1	b6	A709-50-T2	4 367
PL	18" x 1-1/2"	57'-1 1/16"	1	c6	A709-50-F2	5 241
BOLT	1" HSBN1W	0'-3 3/4"	72	d6	F3125 HS TYPE 1 (GALV)	120
PL	8-5/8" x 1/2"	3'-5"	4	x1b	A709-50	200
PL	8-5/8" x 1/2"	3'-4 1/2"	4	x1c	A709-50	198
PL	6" x 1/2"	3'-4 1/2"	22	x1d	A709-50	759
PL	6" x 1/2"	3'-4 1/2"	10	x1f	A709-50	345
PL	4" x 1/2"	0'-7 1/2"	36	x1h	A709-50	153

1

ONE - GIRDER - 6G6A

SHOP NOTES:

1) SEE SHEET X1 FOR GIRDER STANDARDS.
2) SEE SHEET C2 FOR WEB CUTTING DIAGRAM AND FLANGE ASSEMBLY DIAGRAM.
3) SEE SHEET GN1 THRU GN3 FOR GENERAL NOTES AND PAINT NOTES.
4) SEE SHEET GN2 FOR GIRDER ASSEMBLY WELD DETAILS AND WELD TERMINATION DETAILS.

1	REVISIONS TO SHOP BOLTS	08-11-20

REV / RELEASE RECORD

0	FINAL APPROVAL / PROD.	09-20-19
C	FINAL APPROVAL	06-21-19
B	REL. FOR APPROVAL	05-23-19
A	REL. FOR INTERNAL REVIEW	04-08-19

GIRDER 6G6A

WABASH

WABASH STEEL COMPANY, LLC
2007 OLIPHANT DRIVE
VINCENNES, INDIANA 47591

Drawn	Checked	Approved	Revised
DMW 3-23-19	DJW 3-26-19		

PROJECT NO. CUY-IR490/SR 010-2.09/19.28
SFN: 1801519 ~ REF. NO. 20
PID NO. 96833
BR. NO. CUY-010-2039
NORFOLK SOUTHERN RAILROAD OVER OH-10
CUYAHOGA COUNTY, OHIO
CONTRACTOR: KOKOSING
OWNER: OHIO DEPARTMENT OF TRANSPORTATION

Shop Paint: See Dwg. GN1 thru GN3

Edge Distance: AS NOTED | Holes: 1-1/16"Ø U.N.O.

WSLLC No.: 179-18 | Sh. 6B

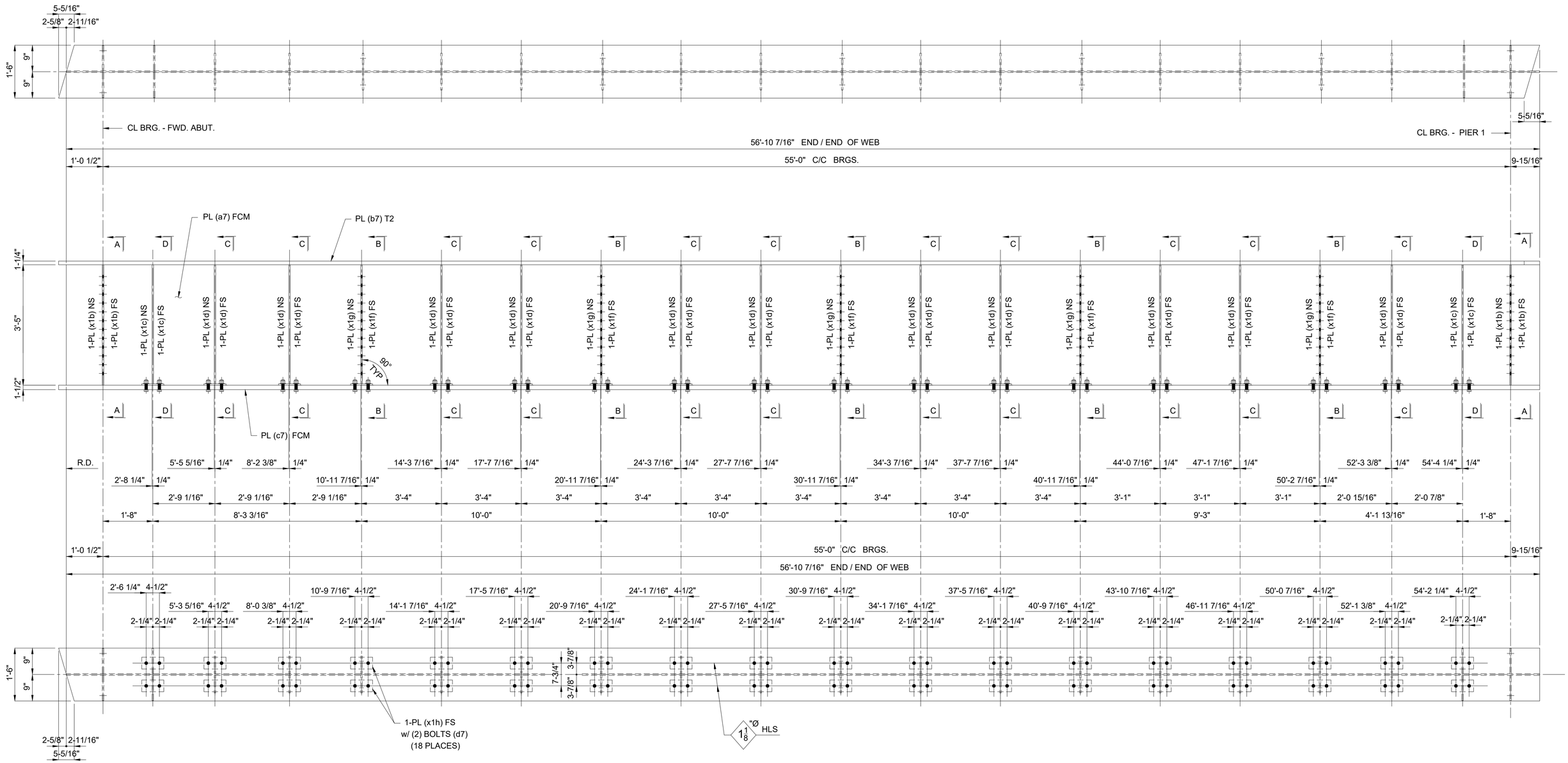

ONE - GIRDER - 7G7A

SHOP NOTES:

1) SEE SHEET X1 FOR GIRDER STANDARDS.
2) SEE SHEET C2 FOR WEB CUTTING DIAGRAM AND FLANGE ASSEMBLY DIAGRAM.
3) SEE SHEET GN1 THRU GN3 FOR GENERAL NOTES AND PAINT NOTES.
4) SEE SHEET GN2 FOR GIRDER ASSEMBLY WELD DETAILS AND WELD TERMINATION DETAILS.
5) SEE SHEET 7B FOR B.O.M.

REV / RELEASE RECORD		
0	FINAL APPROVAL / PROD.	09-20-19
C	FINAL APPROVAL	06-21-19
B	REL. FOR APPROVAL	05-23-19
A	REL. FOR INTERNAL REVIEW	04-08-19

GIRDER 7G7A

WABASH

WABASH STEEL COMPANY, LLC
2007 OLIPHANT DRIVE
VINCENNES, INDIANA 47591

Drawn	Checked	Approved	Revised
DMW 3-23-19	DJW 3-26-19		

PROJECT NO. CUY-IR490/SR 010-2.09/19.28
SFN: 1801519 ~ REF. NO. 20
PID NO. 96833
BR. NO. CUY-010-2039
NORFOLK SOUTHERN RAILROAD OVER OH-10
CUYAHOGA COUNTY, OHIO
CONTRACTOR: KOKOSING
OWNER: OHIO DEPARTMENT OF TRANSPORTATION

Shop Paint: See Dwg. GN1 thru GN3

Edge Distance: AS NOTED | Holes: 1-1/16"Ø U.N.O.

WSLLC No.: 179-18 | Sh. 7AB

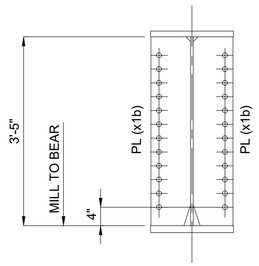

SECTION "A-A"

(2 PLACES)

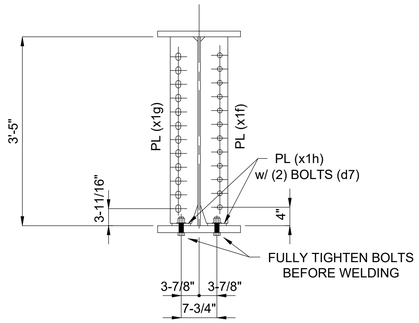

SECTION "B-B"

(5 PLACES)

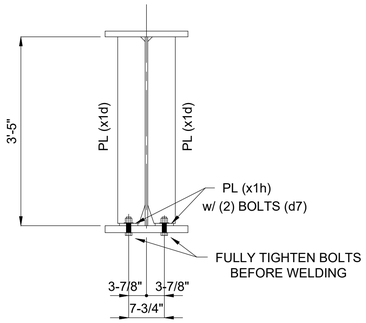

SECTION "C-C"

(11 PLACES)

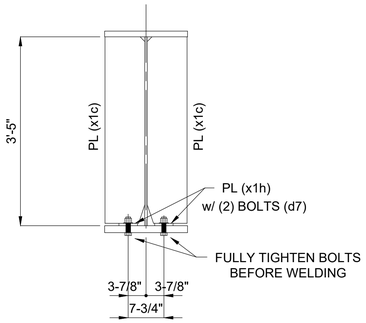

SECTION "D-D"

(2 PLACES)

BILL OF MATERIAL

Kind	Section	Length	Req.	Mark	Grade	Remarks
		GIRDERS	1	7G7A		(15 852 #)
PL	41" x 9/16"	56'-10 7/16"	1	a7	A709-50-F2	4 469
PL	18" x 1-1/4"	57'-1 1/16"	1	b7	A709-50-T2	4 367
PL	18" x 1-1/2"	57'-1 1/16"	1	c7	A709-50-F2	5 241
BOLT	1" HSBN1W	0'-3 3/4"	72	d7	F3125 HS TYPE 1 (GALV)	120
PL	8-5/8" x 1/2"	3'-5"	4	x1b	A709-50	200
PL	8-5/8" x 1/2"	3'-4 1/2"	4	x1c	A709-50	198
PL	6" x 1/2"	3'-4 1/2"	22	x1d	A709-50	759
PL	6" x 1/2"	3'-4 1/2"	5	x1f	A709-50	173
PL	6" x 1/2"	3'-4 1/2"	5	x1g	A709-50	172
PL	4" x 1/2"	0'-7 1/2"	36	x1h	A709-50	153

1

ONE - GIRDER - 7G7A

SHOP NOTES:

1) SEE SHEET X1 FOR GIRDER STANDARDS.
2) SEE SHEET C2 FOR WEB CUTTING DIAGRAM AND FLANGE ASSEMBLY DIAGRAM.
3) SEE SHEET GN1 THRU GN3 FOR GENERAL NOTES AND PAINT NOTES.
4) SEE SHEET GN2 FOR GIRDER ASSEMBLY WELD DETAILS AND WELD TERMINATION DETAILS.

1	REVISIONS TO SHOP BOLTS	08-11-20

REV / RELEASE RECORD

0	FINAL APPROVAL / PROD.	09-20-19
C	FINAL APPROVAL	06-21-19
B	REL. FOR APPROVAL	05-23-19
A	REL. FOR INTERNAL REVIEW	04-08-19

GIRDER 7G7A

WABASH

WABASH STEEL COMPANY, LLC
2007 OLIPHANT DRIVE
VINCENNES, INDIANA 47591

Drawn	Checked	Approved	Revised
DMW 3-23-19	DJW 3-26-19		

PROJECT NO. CUY-IR490/SR 010-2.09/19.28
SFN: 1801519 ~ REF. NO. 20
PID NO. 96833
BR. NO. CUY-010-2039
NORFOLK SOUTHERN RAILROAD OVER OH-10
CUYAHOGA COUNTY, OHIO
CONTRACTOR: KOKOSING
OWNER: OHIO DEPARTMENT OF TRANSPORTATION

Shop Paint: See Dwg. GN1 thru GN3

Edge Distance: AS NOTED | Holes: 1-1/16"Ø U.N.O.

WSLLC No.: 179-18 | Sh. 7B

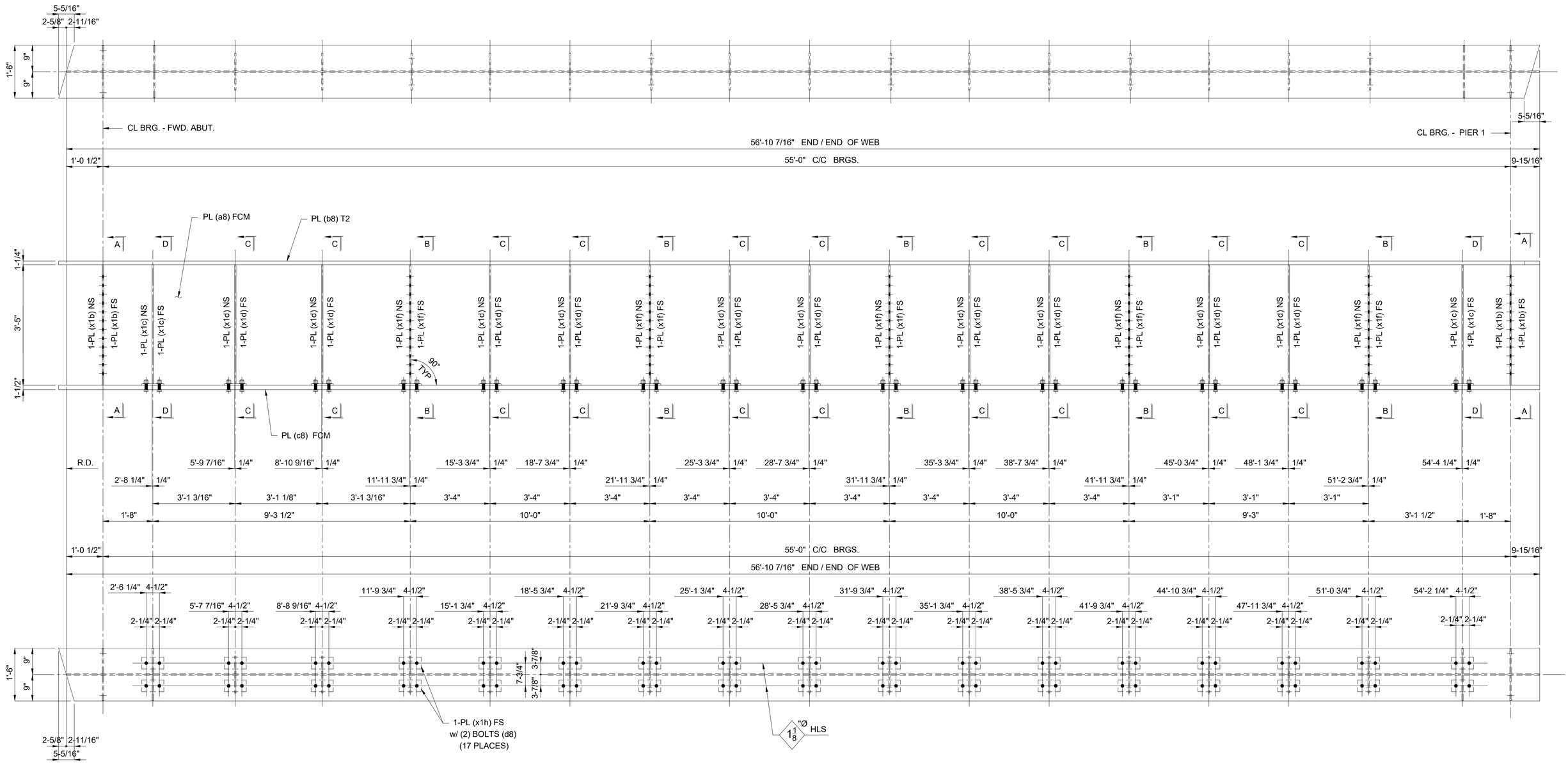

ONE - GIRDER - 8G8A

SHOP NOTES:

1) SEE SHEET X1 FOR GIRDER STANDARDS.
2) SEE SHEET C2 FOR WEB CUTTING DIAGRAM AND FLANGE ASSEMBLY DIAGRAM.
3) SEE SHEET GN1 THRU GN3 FOR GENERAL NOTES AND PAINT NOTES.
4) SEE SHEET GN2 FOR GIRDER ASSEMBLY WELD DETAILS AND WELD TERMINATION DETAILS.
5) SEE SHEET 8B FOR B.O.M.

REV / RELEASE RECORD		
0	FINAL APPROVAL / PROD.	09-20-19
C	FINAL APPROVAL	06-21-19
B	REL. FOR APPROVAL	05-23-19
A	REL. FOR INTERNAL REVIEW	04-08-19

GIRDER 8G8A

WABASH

WABASH STEEL COMPANY, LLC
2007 OLIPHANT DRIVE
VINCENNES, INDIANA 47591

Drawn	Checked	Approved	Revised
DMW 3-23-19	DJW 3-26-19		

PROJECT NO. CUY-IR490/SR 010-2.09/19.28
SFN: 1801519 ~ REF. NO. 20
PID NO. 96833
BR. NO. CUY-010-2039
NORFOLK SOUTHERN RAILROAD OVER OH-10
CUYAHOGA COUNTY, OHIO
CONTRACTOR: KOKOSING
OWNER: OHIO DEPARTMENT OF TRANSPORTATION

Shop Paint: See Dwg. GN1 thru GN3

Edge Distance: AS NOTED | Holes: 1-1/16"Ø U.N.O.

WSLLC No.: 179-18 | Sh. 8AB

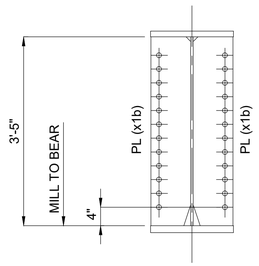

SECTION "A-A"

(2 PLACES)

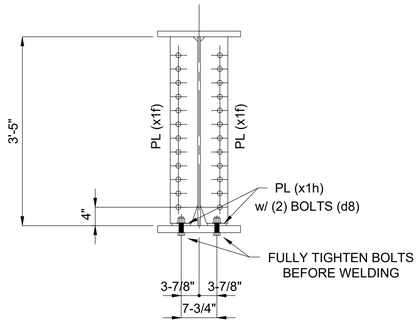

SECTION "B-B"

(5 PLACES)

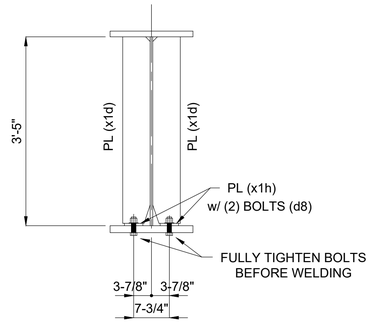

SECTION "C-C"

(10 PLACES)

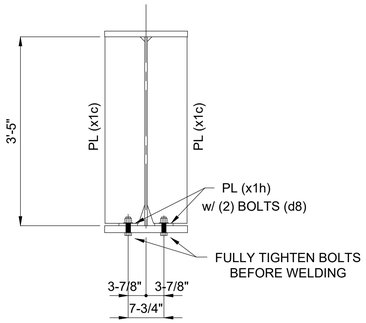

SECTION "D-D"

(2 PLACES)

BILL OF MATERIAL

Kind	Section	Length	Req.	Mark	Grade	Remarks
		GIRDERS	1	8G8A		(15 768 #)
PL	41" x 9/16"	56'-10 7/16"	1	a8	A709-50-F2	4 469
PL	18" x 1-1/4"	57'-1 1/16"	1	b8	A709-50-T2	4 367
PL	18" x 1-1/2"	57'-1 1/16"	1	c8	A709-50-F2	5 241
BOLT	1" HSBN1W	0'-3 3/4"	68	d8	F3125 HS TYPE 1 (GALV)	113
PL	8-5/8" x 1/2"	3'-5"	4	x1b	A709-50	200
PL	8-5/8" x 1/2"	3'-4 1/2"	4	x1c	A709-50	198
PL	6" x 1/2"	3'-4 1/2"	20	x1d	A709-50	690
PL	6" x 1/2"	3'-4 1/2"	10	x1f	A709-50	345
PL	4" x 1/2"	0'-7 1/2"	34	x1h	A709-50	145

1

ONE - GIRDER - 8G8A

SHOP NOTES:

1) SEE SHEET X1 FOR GIRDER STANDARDS.
2) SEE SHEET C2 FOR WEB CUTTING DIAGRAM AND FLANGE ASSEMBLY DIAGRAM.
3) SEE SHEET GN1 THRU GN3 FOR GENERAL NOTES AND PAINT NOTES.
4) SEE SHEET GN2 FOR GIRDER ASSEMBLY WELD DETAILS AND WELD TERMINATION DETAILS.

1	REVISIONS TO SHOP BOLTS	08-11-20

REV / RELEASE RECORD

0	FINAL APPROVAL / PROD.	09-20-19
C	FINAL APPROVAL	06-21-19
B	REL. FOR APPROVAL	05-23-19
A	REL. FOR INTERNAL REVIEW	04-08-19

GIRDER 8G8A

WABASH

WABASH STEEL COMPANY, LLC
2007 OLIPHANT DRIVE
VINCENNES, INDIANA 47591

Drawn	Checked	Approved	Revised
DMW 3-23-19	DJW 3-26-19		

PROJECT NO. CUY-IR490/SR 010-2.09/19.28
SFN: 1801519 ~ REF. NO. 20
PID NO. 96833
BR. NO. CUY-010-2039
NORFOLK SOUTHERN RAILROAD OVER OH-10
CUYAHOGA COUNTY, OHIO
CONTRACTOR: KOKOSING
OWNER: OHIO DEPARTMENT OF TRANSPORTATION

Shop Paint: See Dwg. GN1 thru GN3

Edge Distance: AS NOTED | Holes: 1-1/16"Ø U.N.O.

WSLLC No.: 179-18 | Sh. 8B

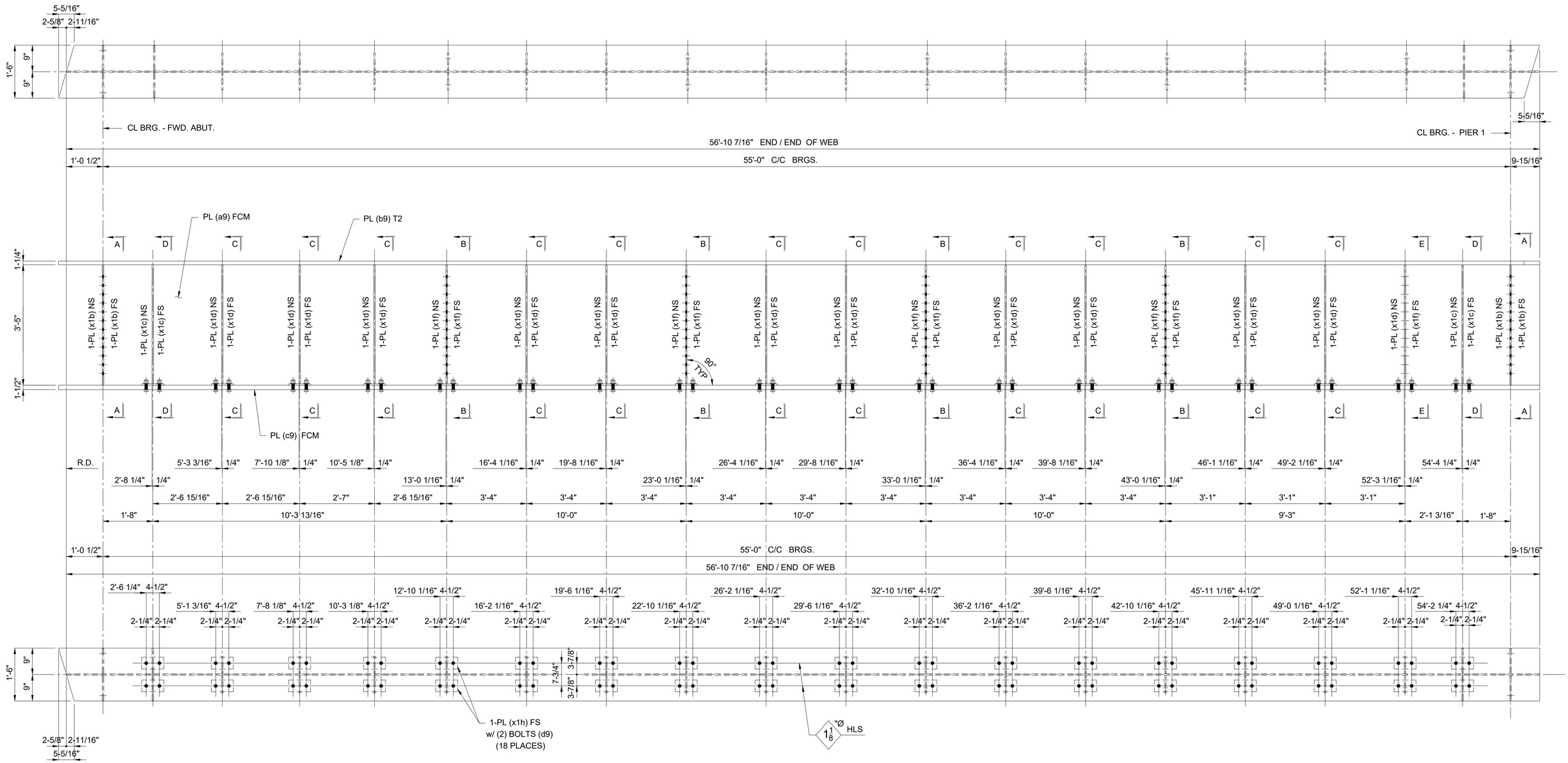

ONE - GIRDER - 9G9A

SHOP NOTES:

1) SEE SHEET X1 FOR GIRDER STANDARDS.
2) SEE SHEET C2 FOR WEB CUTTING DIAGRAM AND FLANGE ASSEMBLY DIAGRAM.
3) SEE SHEET GN1 THRU GN3 FOR GENERAL NOTES AND PAINT NOTES.
4) SEE SHEET GN2 FOR GIRDER ASSEMBLY WELD DETAILS AND WELD TERMINATION DETAILS.
5) SEE SHEET 9B FOR B.O.M.

REV / RELEASE RECORD		
0	FINAL APPROVAL / PROD.	09-20-19
C	FINAL APPROVAL	06-21-19
B	REL. FOR APPROVAL	05-23-19
A	REL. FOR INTERNAL REVIEW	04-08-19

GIRDER 9G9A

WABASH

WABASH STEEL COMPANY, LLC
2007 OLIPHANT DRIVE
VINCENNES, INDIANA 47591

Drawn	Checked	Approved	Revised
DMW 3-23-19	DJW 3-26-19		

PROJECT NO. CUY-IR490/SR 010-2.09/19.28
SFN: 1801519 ~ REF. NO. 20
PID NO. 96833
BR. NO. CUY-010-2039
NORFOLK SOUTHERN RAILROAD OVER OH-10
CUYAHOGA COUNTY, OHIO
CONTRACTOR: KOKOSING
OWNER: OHIO DEPARTMENT OF TRANSPORTATION

Shop Paint: See Dwg. GN1 thru GN3

Edge Distance: AS NOTED | Holes: 1-1/16"Ø U.N.O.

WSLLC No.: 179-18 | Sh. 9AB

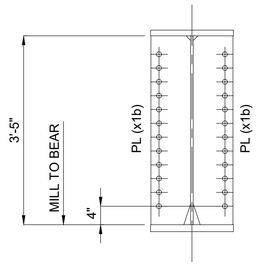

SECTION "A-A"

(2 PLACES)

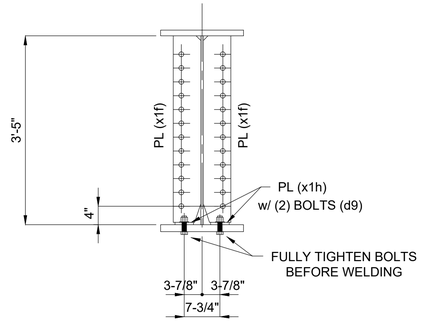

SECTION "B-B"

(4 PLACES)

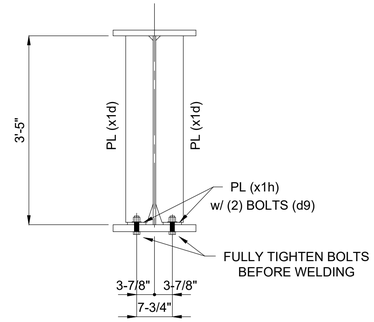

SECTION "C-C"

(11 PLACES)

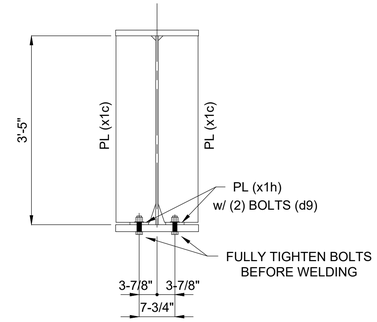

SECTION "D-D"

(2 PLACES)

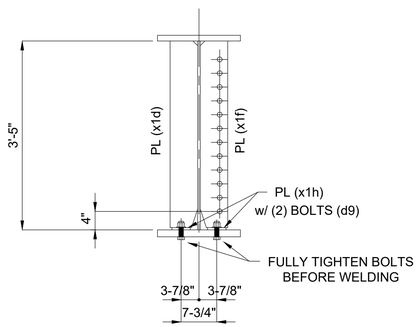

SECTION "E-E"

(ONE PLACE)

BILL OF MATERIAL

Kind	Section	Length	Req.	Mark	Grade	Remarks
		GIRDERS	1	9G9A		(15 852 #)
PL	41" x 9/16"	56'-10 7/16"	1	a9	A709-50-F2	4 469
PL	18" x 1-1/4"	57'-1 1/16"	1	b9	A709-50-T2	4 367
PL	18" x 1-1/2"	57'-1 1/16"	1	c9	A709-50-F2	5 241
BOLT	1" HSBN1W	0'-3 3/4"	72	d9	F3125 HS TYPE 1 (GALV)	120
PL	8-5/8" x 1/2"	3'-5"	4	x1b	A709-50	200
PL	8-5/8" x 1/2"	3'-4 1/2"	4	x1c	A709-50	198
PL	6" x 1/2"	3'-4 1/2"	23	x1d	A709-50	794
PL	6" x 1/2"	3'-4 1/2"	9	x1f	A709-50	310
PL	4" x 1/2"	0'-7 1/2"	36	x1h	A709-50	153

1

ONE - GIRDER - 9G9A

SHOP NOTES:

1) SEE SHEET X1 FOR GIRDER STANDARDS.
2) SEE SHEET C2 FOR WEB CUTTING DIAGRAM AND FLANGE ASSEMBLY DIAGRAM.
3) SEE SHEET GN1 THRU GN3 FOR GENERAL NOTES AND PAINT NOTES.
4) SEE SHEET GN2 FOR GIRDER ASSEMBLY WELD DETAILS AND WELD TERMINATION DETAILS.

1	REVISIONS TO SHOP BOLTS	08-11-20

REV / RELEASE RECORD

0	FINAL APPROVAL / PROD.	09-20-19
C	FINAL APPROVAL	06-21-19
B	REL. FOR APPROVAL	05-23-19
A	REL. FOR INTERNAL REVIEW	04-08-19

GIRDER 9G9A

WABASH

WABASH STEEL COMPANY, LLC
2007 OLIPHANT DRIVE
VINCENNES, INDIANA 47591

Drawn	Checked	Approved	Revised
DMW 3-23-19	DJW 3-26-19		

PROJECT NO. CUY-IR490/SR 010-2.09/19.28
SFN: 1801519 ~ REF. NO. 20
PID NO. 96833
BR. NO. CUY-010-2039
NORFOLK SOUTHERN RAILROAD OVER OH-10
CUYAHOGA COUNTY, OHIO
CONTRACTOR: KOKOSING
OWNER: OHIO DEPARTMENT OF TRANSPORTATION

Shop Paint: See Dwg. GN1 thru GN3

Edge Distance: AS NOTED | Holes: 1-1/16"Ø U.N.O.

WSLLC No.: 179-18 | Sh. 9B

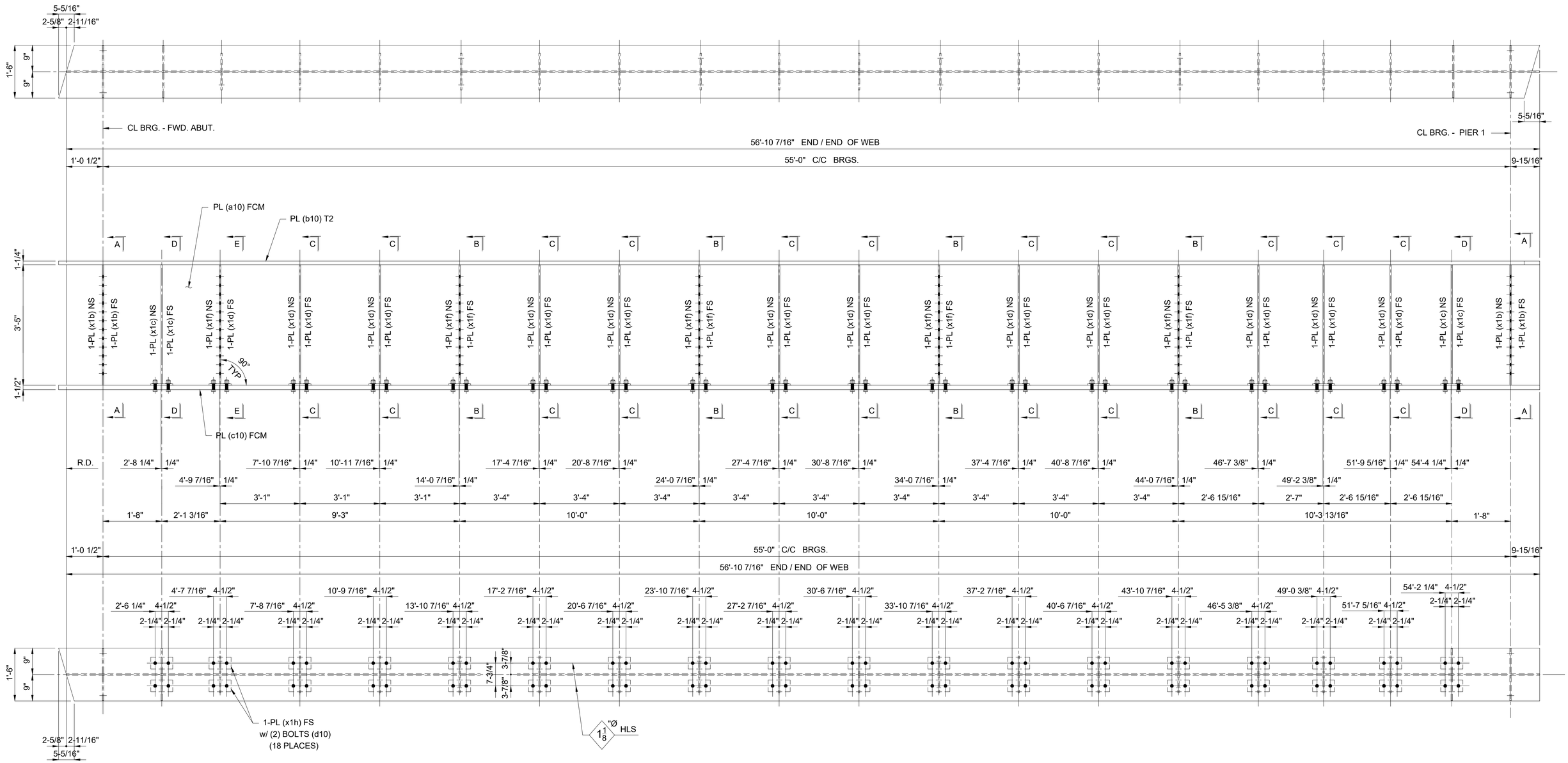

ONE - GIRDER - 10G10A

SHOP NOTES:

1) SEE SHEET X1 FOR GIRDER STANDARDS.
2) SEE SHEET C2 FOR WEB CUTTING DIAGRAM AND FLANGE ASSEMBLY DIAGRAM.
3) SEE SHEET GN1 THRU GN3 FOR GENERAL NOTES AND PAINT NOTES.
4) SEE SHEET GN2 FOR GIRDER ASSEMBLY WELD DETAILS AND WELD TERMINATION DETAILS.
5) SEE SHEET 10B FOR B.O.M.

REV / RELEASE RECORD		
0	FINAL APPROVAL / PROD.	09-20-19
C	FINAL APPROVAL	06-21-19
B	REL. FOR APPROVAL	05-23-19
A	REL. FOR INTERNAL REVIEW	04-08-19

GIRDER 10G10A

WABASH

WABASH STEEL COMPANY, LLC
2007 OLIPHANT DRIVE
VINCENNES, INDIANA 47591

Drawn	Checked	Approved	Revised
DMW 3-24-19	DJW 3-27-19		

PROJECT NO. CUY-IR490/SR 010-2.09/19.28
SFN: 1801519 ~ REF. NO. 20
PID NO. 96833
BR. NO. CUY-010-2039
NORFOLK SOUTHERN RAILROAD OVER OH-10
CUYAHOGA COUNTY, OHIO
CONTRACTOR: KOKOSING
OWNER: OHIO DEPARTMENT OF TRANSPORTATION

Shop Paint: See Dwg. GN1 thru GN3

Edge Distance: AS NOTED | Holes: 1-1/16"Ø U.N.O.

WSLLC No.: 179-18 | Sh. 10AB

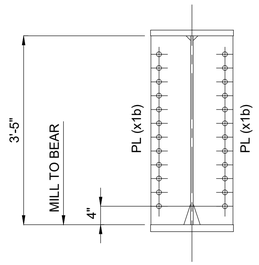

SECTION "A-A"

(2 PLACES)

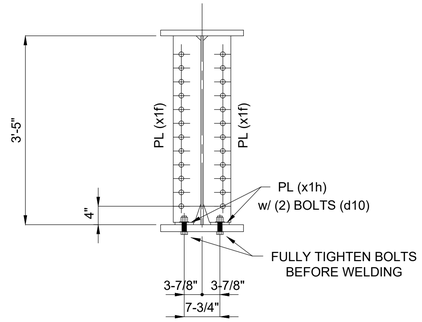

SECTION "B-B"

(4 PLACES)

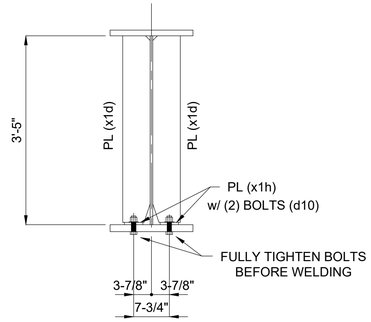

SECTION "C-C"

(11 PLACES)

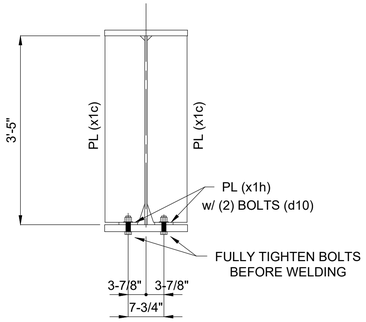

SECTION "D-D"

(2 PLACES)

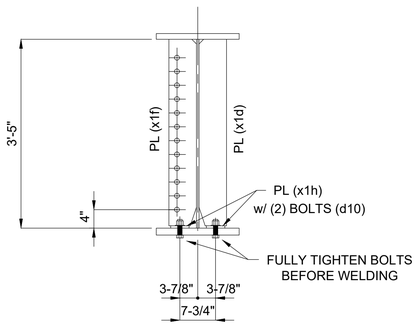

SECTION "E-E"

(ONE PLACE)

BILL OF MATERIAL

Kind	Section	Length	Req.	Mark	Grade	Remarks
		GIRDERS	1	10G10A		(15 852 #)
PL	41" x 9/16"	56'-10 7/16"	1	a10	A709-50-F2	4 469
PL	18" x 1-1/4"	57'-1 1/16"	1	b10	A709-50-T2	4 367
PL	18" x 1-1/2"	57'-1 1/16"	1	c10	A709-50-F2	5 241
BOLT	1" HSBN1W	0'-3 3/4"	72	d10	F3125 HS TYPE 1 (GALV)	120
PL	8-5/8" x 1/2"	3'-5"	4	x1b	A709-50	200
PL	8-5/8" x 1/2"	3'-4 1/2"	4	x1c	A709-50	198
PL	6" x 1/2"	3'-4 1/2"	23	x1d	A709-50	794
PL	6" x 1/2"	3'-4 1/2"	9	x1f	A709-50	310
PL	4" x 1/2"	0'-7 1/2"	36	x1h	A709-50	153

1

ONE - GIRDER - 10G10A

SHOP NOTES:

1) SEE SHEET X1 FOR GIRDER STANDARDS.
2) SEE SHEET C2 FOR WEB CUTTING DIAGRAM AND FLANGE ASSEMBLY DIAGRAM.
3) SEE SHEET GN1 THRU GN3 FOR GENERAL NOTES AND PAINT NOTES.
4) SEE SHEET GN2 FOR GIRDER ASSEMBLY WELD DETAILS AND WELD TERMINATION DETAILS.

1	REVISIONS TO SHOP BOLTS	08-11-20

REV / RELEASE RECORD

0	FINAL APPROVAL / PROD.	09-20-19
C	FINAL APPROVAL	06-21-19
B	REL. FOR APPROVAL	05-23-19
A	REL. FOR INTERNAL REVIEW	04-08-19

GIRDER 10G10A

WABASH

WABASH STEEL COMPANY, LLC
2007 OLIPHANT DRIVE
VINCENNES, INDIANA 47591

Drawn	Checked	Approved	Revised
DMW 3-24-19	DJW 3-27-19		

PROJECT NO. CUY-IR490/SR 010-2.09/19.28
SFN: 1801519 ~ REF. NO. 20
PID NO. 96833
BR. NO. CUY-010-2039
NORFOLK SOUTHERN RAILROAD OVER OH-10
CUYAHOGA COUNTY, OHIO
CONTRACTOR: KOKOSING
OWNER: OHIO DEPARTMENT OF TRANSPORTATION

Shop Paint: See Dwg. GN1 thru GN3

Edge Distance: AS NOTED | Holes: 1-1/16"Ø U.N.O.

WSLLC No.: 179-18 | Sh. 10B

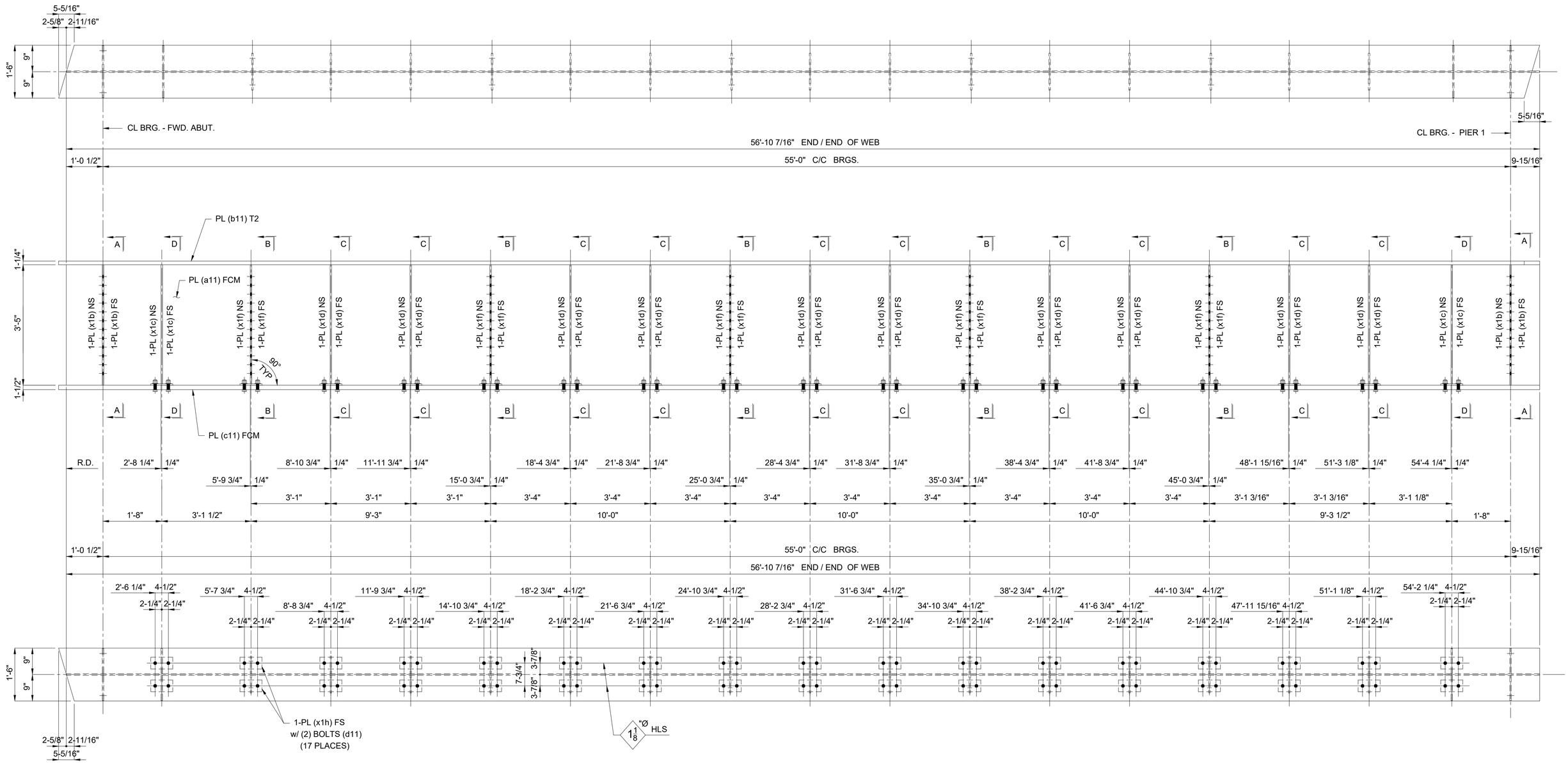

ONE - GIRDER - 11G11A

SHOP NOTES:

1) SEE SHEET X1 FOR GIRDER STANDARDS.
2) SEE SHEET C2 FOR WEB CUTTING DIAGRAM AND FLANGE ASSEMBLY DIAGRAM.
3) SEE SHEET GN1 THRU GN3 FOR GENERAL NOTES AND PAINT NOTES.
4) SEE SHEET GN2 FOR GIRDER ASSEMBLY WELD DETAILS AND WELD TERMINATION DETAILS.
5) SEE SHEET 11B FOR B.O.M.

REV / RELEASE RECORD		
0	FINAL APPROVAL / PROD.	09-20-19
C	FINAL APPROVAL	06-21-19
B	REL. FOR APPROVAL	04-08-19
A	REL. FOR INTERNAL REVIEW	04-08-19

GIRDER 11G11A

WABASH

WABASH STEEL COMPANY, LLC
2007 OLIPHANT DRIVE
VINCENNES, INDIANA 47591

Drawn	Checked	Approved	Revised
DMW 3-24-19	DJW 3-27-19		

PROJECT NO. CUY-IR490/SR 010-2.09/19.28
SFN: 1801519 ~ REF. NO. 20
PID NO. 96833
BR. NO. CUY-010-2039
NORFOLK SOUTHERN RAILROAD OVER OH-10
CUYAHOGA COUNTY, OHIO
CONTRACTOR: KOKOSING
OWNER: OHIO DEPARTMENT OF TRANSPORTATION

Shop Paint: See Dwg. GN1 thru GN3

Edge Distance: AS NOTED | Holes: 1-1/16"Ø U.N.O.

WSLLC No.: 179-18 | Sh. 11AB

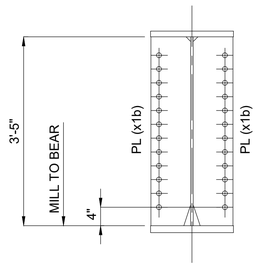

SECTION "A-A"

(2 PLACES)

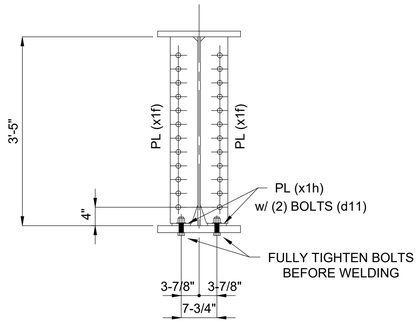

SECTION "B-B"

(5 PLACES)

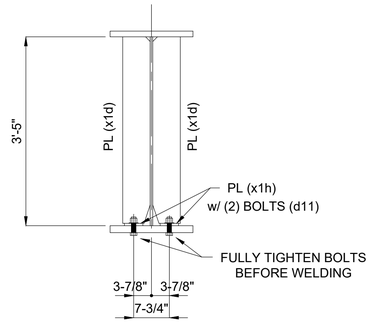

SECTION "C-C"

(10 PLACES)

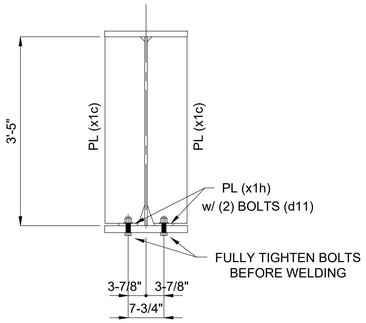

SECTION "D-D"

(2 PLACES)

BILL OF MATERIAL

Kind	Section	Length	Req.	Mark	Grade	Remarks
		GIRDERS	1	11G11A		(15 768 #)
PL	41" x 9/16"	56'-10 7/16"	1	a11	A709-50-F2	4 469
PL	18" x 1-1/4"	57'-1 1/16"	1	b11	A709-50-T2	4 367
PL	18" x 1-1/2"	57'-1 1/16"	1	c11	A709-50-F2	5 241
BOLT	1" HSBN1W	0'-3 3/4"	68	d11	F3125 HS TYPE 1 (GALV)	113
PL	8-5/8" x 1/2"	3'-5"	4	x1b	A709-50	200
PL	8-5/8" x 1/2"	3'-4 1/2"	4	x1c	A709-50	198
PL	6" x 1/2"	3'-4 1/2"	20	x1d	A709-50	690
PL	6" x 1/2"	3'-4 1/2"	10	x1f	A709-50	345
PL	4" x 1/2"	0'-7 1/2"	34	x1h	A709-50	145

1

ONE - GIRDER - 11G11A

SHOP NOTES:

1) SEE SHEET X1 FOR GIRDER STANDARDS.
2) SEE SHEET C2 FOR WEB CUTTING DIAGRAM AND FLANGE ASSEMBLY DIAGRAM.
3) SEE SHEET GN1 THRU GN3 FOR GENERAL NOTES AND PAINT NOTES.
4) SEE SHEET GN2 FOR GIRDER ASSEMBLY WELD DETAILS AND WELD TERMINATION DETAILS.

1	REVISIONS TO SHOP BOLTS	08-11-20

REV / RELEASE RECORD

0	FINAL APPROVAL / PROD.	09-20-19
C	FINAL APPROVAL	06-21-19
B	REL. FOR APPROVAL	05-23-19
A	REL. FOR INTERNAL REVIEW	04-08-19

GIRDER 11G11A

WABASH

WABASH STEEL COMPANY, LLC
2007 OLIPHANT DRIVE
VINCENNES, INDIANA 47591

Drawn	Checked	Approved	Revised
DMW 3-24-19	DJW 3-27-19		

PROJECT NO. CUY-IR490/SR 010-2.09/19.28
SFN: 1801519 ~ REF. NO. 20
PID NO. 96833
BR. NO. CUY-010-2039
NORFOLK SOUTHERN RAILROAD OVER OH-10
CUYAHOGA COUNTY, OHIO
CONTRACTOR: KOKOSING
OWNER: OHIO DEPARTMENT OF TRANSPORTATION

Shop Paint: See Dwg. GN1 thru GN3

Edge Distance: AS NOTED | Holes: 1-1/16"Ø U.N.O.

WSLLC No.: 179-18 | Sh. 11B

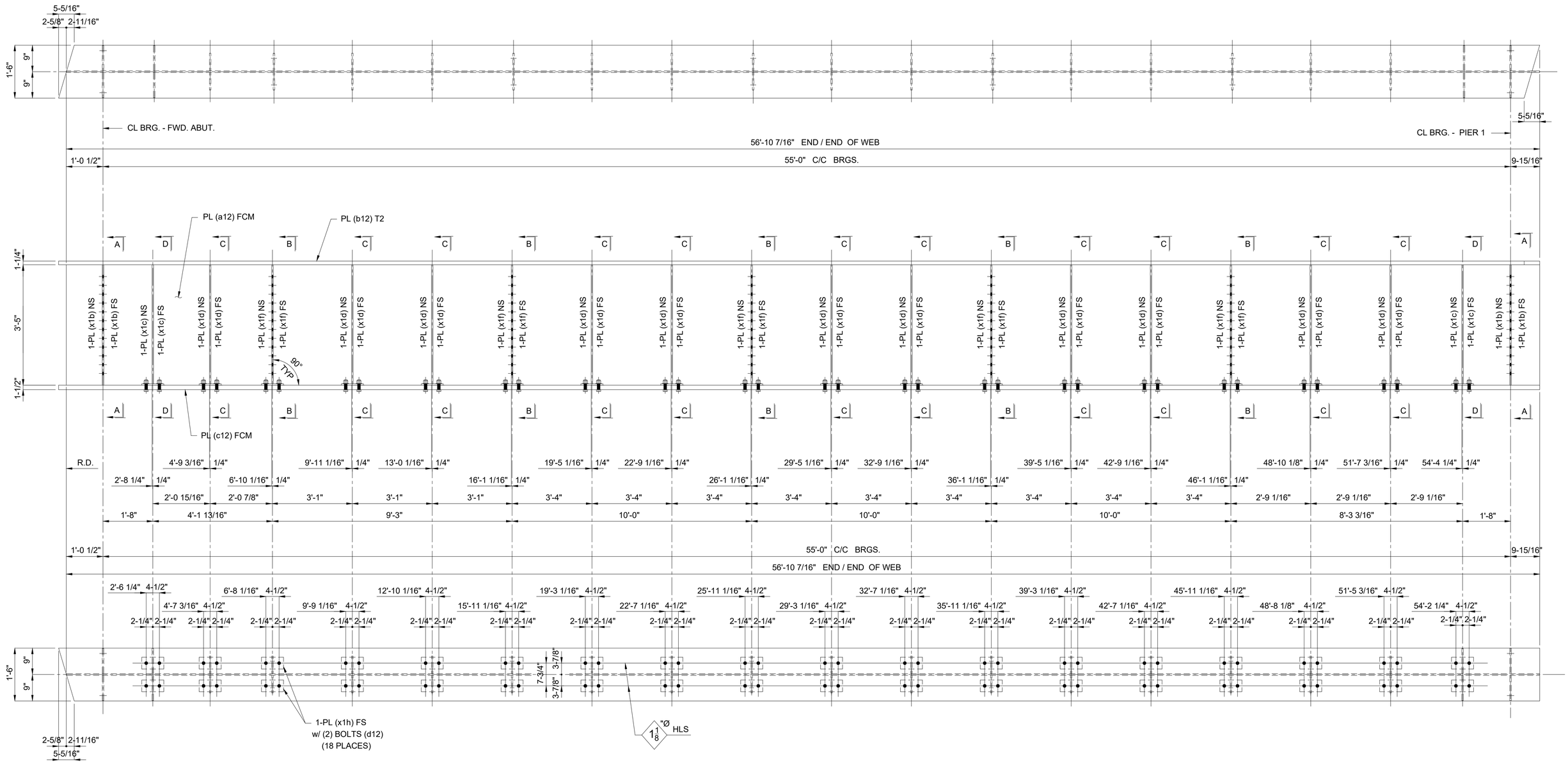

ONE - GIRDER - 12G12A

SHOP NOTES:

1) SEE SHEET X1 FOR GIRDER STANDARDS.
2) SEE SHEET C2 FOR WEB CUTTING DIAGRAM AND FLANGE ASSEMBLY DIAGRAM.
3) SEE SHEET GN1 THRU GN3 FOR GENERAL NOTES AND PAINT NOTES.
4) SEE SHEET GN2 FOR GIRDER ASSEMBLY WELD DETAILS AND WELD TERMINATION DETAILS.
5) SEE SHEET 12B FOR B.O.M.

REV / RELEASE RECORD		
0	FINAL APPROVAL / PROD.	09-20-19
C	FINAL APPROVAL	06-21-19
B	REL. FOR APPROVAL	05-23-19
A	REL. FOR INTERNAL REVIEW	04-08-19

GIRDER 12G12A

WABASH

WABASH STEEL COMPANY, LLC
2007 OLIPHANT DRIVE
VINCENNES, INDIANA 47591

Drawn	Checked	Approved	Revised
DMW 3-24-19	DJW 3-27-19		

PROJECT NO. CUY-IR490/SR 010-2.09/19.28
SFN: 1801519 ~ REF. NO. 20
PID NO. 96833
BR. NO. CUY-010-2039
NORFOLK SOUTHERN RAILROAD OVER OH-10
CUYAHOGA COUNTY, OHIO
CONTRACTOR: KOKOSING
OWNER: OHIO DEPARTMENT OF TRANSPORTATION

Shop Paint: See Dwg. GN1 thru GN3

Edge Distance: AS NOTED | Holes: 1-1/16"Ø U.N.O.

WSLLC No.: 179-18 | Sh. 12AB

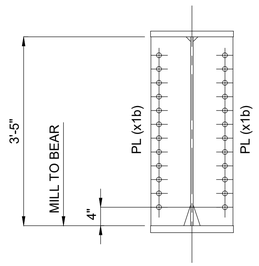

SECTION "A-A"

(2 PLACES)

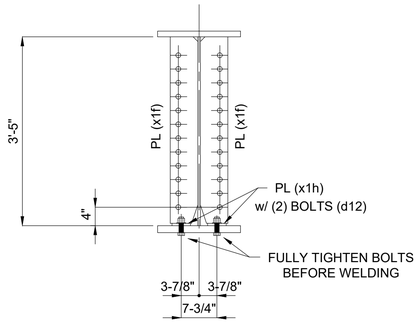

SECTION "B-B"

(5 PLACES)

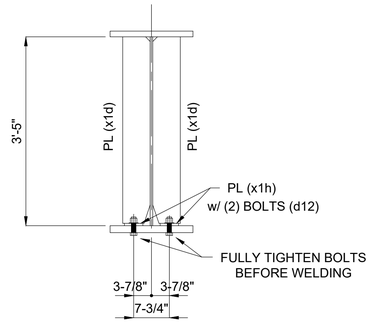

SECTION "C-C"

(11 PLACES)

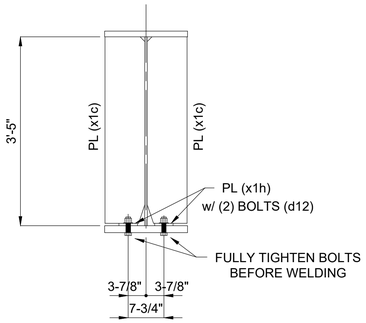

SECTION "D-D"

(2 PLACES)

BILL OF MATERIAL

Kind	Section	Length	Req.	Mark	Grade	Remarks
		GIRDERS	1	12G12A		(15 852 #)
PL	41" x 9/16"	56'-10 7/16"	1	a12	A709-50-F2	4 469
PL	18" x 1-1/4"	57'-1 1/16"	1	b12	A709-50-T2	4 367
PL	18" x 1-1/2"	57'-1 1/16"	1	c12	A709-50-F2	5 241
BOLT	1" HSBN1W	0'-3 3/4"	72	d12	F3125 HS TYPE 1 (GALV)	120
PL	8-5/8" x 1/2"	3'-5"	4	x1b	A709-50	200
PL	8-5/8" x 1/2"	3'-4 1/2"	4	x1c	A709-50	198
PL	6" x 1/2"	3'-4 1/2"	22	x1d	A709-50	759
PL	6" x 1/2"	3'-4 1/2"	10	x1f	A709-50	345
PL	4" x 1/2"	0'-7 1/2"	36	x1h	A709-50	153

1

ONE - GIRDER - 12G12A

SHOP NOTES:

1) SEE SHEET X1 FOR GIRDER STANDARDS.
2) SEE SHEET C2 FOR WEB CUTTING DIAGRAM AND FLANGE ASSEMBLY DIAGRAM.
3) SEE SHEET GN1 THRU GN3 FOR GENERAL NOTES AND PAINT NOTES.
4) SEE SHEET GN2 FOR GIRDER ASSEMBLY WELD DETAILS AND WELD TERMINATION DETAILS.

1	REVISIONS TO SHOP BOLTS	08-11-20

REV / RELEASE RECORD

0	FINAL APPROVAL / PROD.	09-20-19
C	FINAL APPROVAL	06-21-19
B	REL. FOR APPROVAL	05-23-19
A	REL. FOR INTERNAL REVIEW	04-08-19

GIRDER 12G12A

WABASH

WABASH STEEL COMPANY, LLC
2007 OLIPHANT DRIVE
VINCENNES, INDIANA 47591

Drawn	Checked	Approved	Revised
DMW 3-24-19	DJW 3-27-19		

PROJECT NO. CUY-IR490/SR 010-2.09/19.28
SFN: 1801519 ~ REF. NO. 20
PID NO. 96833
BR. NO. CUY-010-2039
NORFOLK SOUTHERN RAILROAD OVER OH-10
CUYAHOGA COUNTY, OHIO
CONTRACTOR: KOKOSING
OWNER: OHIO DEPARTMENT OF TRANSPORTATION

Shop Paint: See Dwg. GN1 thru GN3

Edge Distance: AS NOTED | Holes: 1-1/16"Ø U.N.O.

WSLLC No.: 179-18 | Sh. 12B

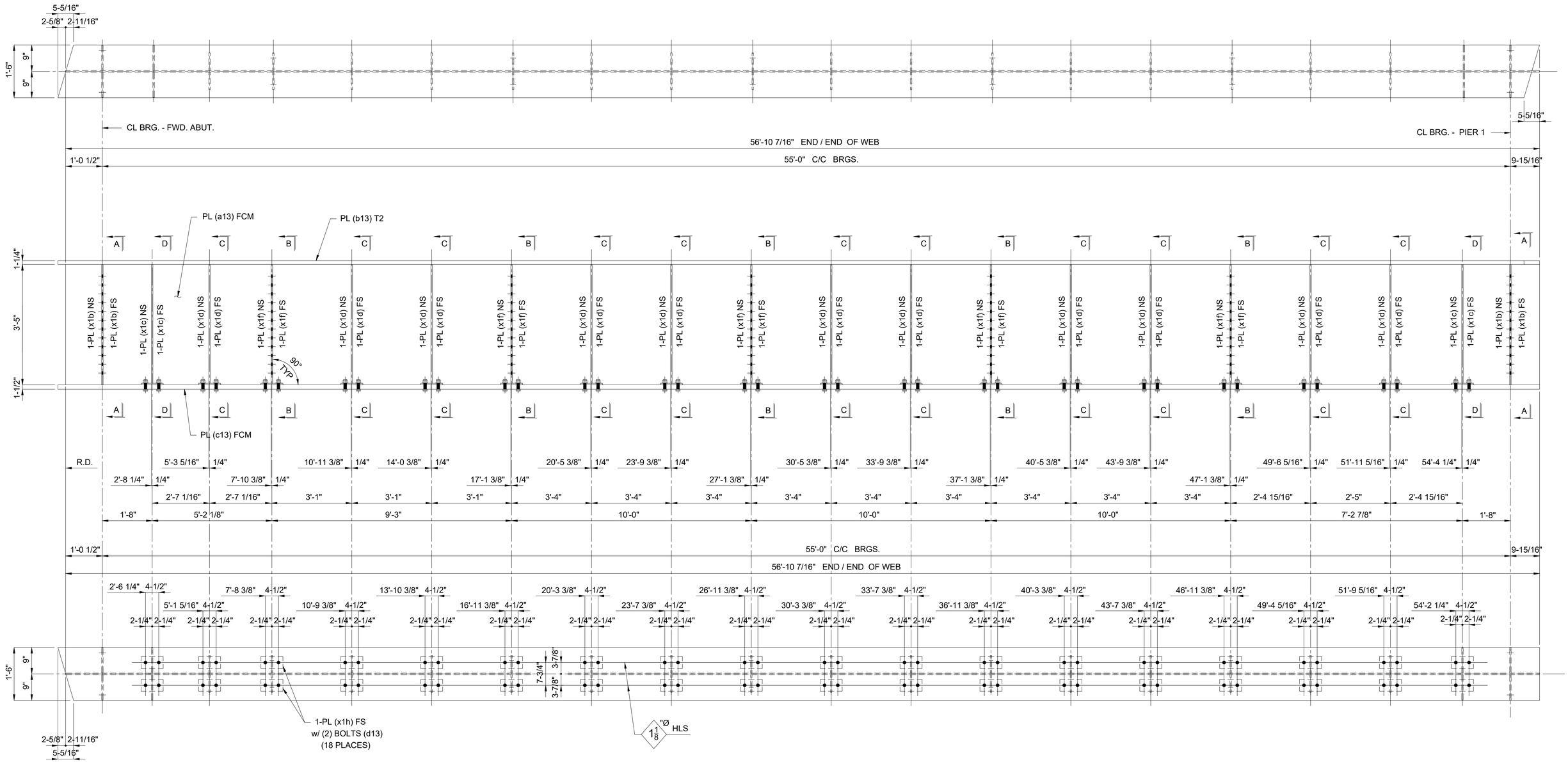

ONE - GIRDER - 13G13A

SHOP NOTES:

1) SEE SHEET X1 FOR GIRDER STANDARDS.
2) SEE SHEET C2 FOR WEB CUTTING DIAGRAM AND FLANGE ASSEMBLY DIAGRAM.
3) SEE SHEET GN1 THRU GN3 FOR GENERAL NOTES AND PAINT NOTES.
4) SEE SHEET GN2 FOR GIRDER ASSEMBLY WELD DETAILS AND WELD TERMINATION DETAILS.
5) SEE SHEET 13B FOR B.O.M.

REV / RELEASE RECORD		
0	FINAL APPROVAL / PROD.	09-20-19
C	FINAL APPROVAL	06-21-19
B	REL. FOR APPROVAL	05-23-19
A	REL. FOR INTERNAL REVIEW	04-08-19

GIRDER 13G13A

WABASH

WABASH STEEL COMPANY, LLC
2007 OLIPHANT DRIVE
VINCENNES, INDIANA 47591

Drawn	Checked	Approved	Revised
DMW 3-24-19	DJW 3-27-19		

PROJECT NO. CUY-IR490/SR 010-2.09/19.28
SFN: 1801519 ~ REF. NO. 20
PID NO. 96833
BR. NO. CUY-010-2039
NORFOLK SOUTHERN RAILROAD OVER OH-10
CUYAHOGA COUNTY, OHIO
CONTRACTOR: KOKOSING
OWNER: OHIO DEPARTMENT OF TRANSPORTATION

Shop Paint: See Dwg. GN1 thru GN3
Edge Distance: AS NOTED Holes: 1-1/16"Ø U.N.O.
WSLLC No.: 179-18 Sh. 13AB

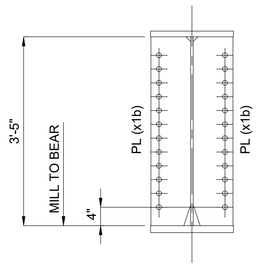

SECTION "A-A"

(2 PLACES)

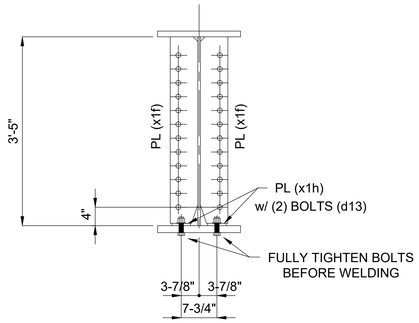

SECTION "B-B"

(5 PLACES)

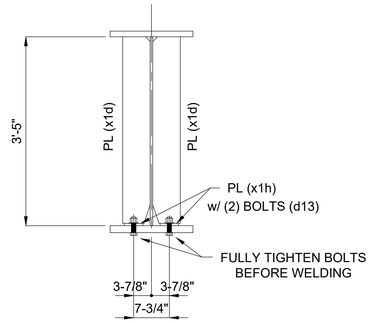

SECTION "C-C"

(11 PLACES)

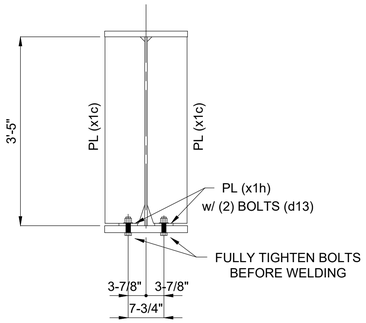

SECTION "D-D"

(2 PLACES)

BILL OF MATERIAL

Kind	Section	Length	Req.	Mark	Grade	Remarks
		GIRDERS	1	13G13A		(15 852 #)
PL	41" x 9/16"	56'-10 7/16"	1	a13	A709-50-F2	4 469
PL	18" x 1-1/4"	57'-1 1/16"	1	b13	A709-50-T2	4 367
PL	18" x 1-1/2"	57'-1 1/16"	1	c13	A709-50-F2	5 241
BOLT	1" HSBN1W	0'-3 3/4"	72	d13	F3125 HS TYPE 1 (GALV)	120
PL	8-5/8" x 1/2"	3'-5"	4	x1b	A709-50	200
PL	8-5/8" x 1/2"	3'-4 1/2"	4	x1c	A709-50	198
PL	6" x 1/2"	3'-4 1/2"	22	x1d	A709-50	759
PL	6" x 1/2"	3'-4 1/2"	10	x1f	A709-50	345
PL	4" x 1/2"	0'-7 1/2"	36	x1h	A709-50	153

1

ONE - GIRDER - 13G13A

SHOP NOTES:

1) SEE SHEET X1 FOR GIRDER STANDARDS.
2) SEE SHEET C2 FOR WEB CUTTING DIAGRAM AND FLANGE ASSEMBLY DIAGRAM.
3) SEE SHEET GN1 THRU GN3 FOR GENERAL NOTES AND PAINT NOTES.
4) SEE SHEET GN2 FOR GIRDER ASSEMBLY WELD DETAILS AND WELD TERMINATION DETAILS.

1	REVISIONS TO SHOP BOLTS	08-11-20

REV / RELEASE RECORD

0	FINAL APPROVAL / PROD.	09-20-19
C	FINAL APPROVAL	06-21-19
B	REL. FOR APPROVAL	05-23-19
A	REL. FOR INTERNAL REVIEW	04-08-19

GIRDER 13G13A

WABASH

WABASH STEEL COMPANY, LLC
2007 OLIPHANT DRIVE
VINCENNES, INDIANA 47591

Drawn	Checked	Approved	Revised
DMW 3-24-19	DJW 3-27-19		

PROJECT NO. CUY-IR490/SR 010-2.09/19.28
SFN: 1801519 ~ REF. NO. 20
PID NO. 96833
BR. NO. CUY-010-2039
NORFOLK SOUTHERN RAILROAD OVER OH-10
CUYAHOGA COUNTY, OHIO
CONTRACTOR: KOKOSING
OWNER: OHIO DEPARTMENT OF TRANSPORTATION

Shop Paint: See Dwg. GN1 thru GN3

Edge Distance: AS NOTED | Holes: 1-1/16"Ø U.N.O.

WSLLC No.: 179-18 | Sh. 13B

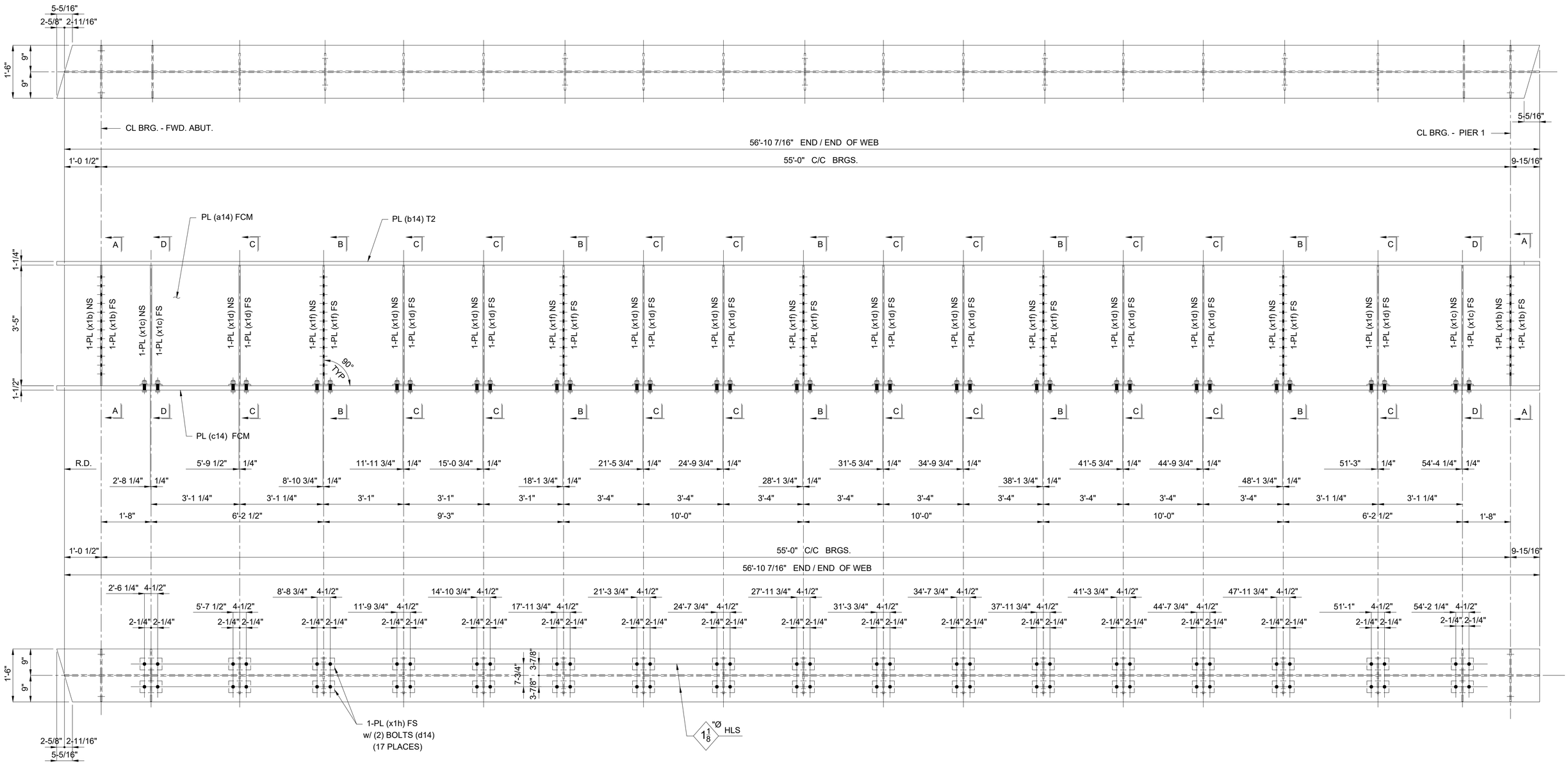

ONE - GIRDER - 14G14A

SHOP NOTES:

1) SEE SHEET X1 FOR GIRDER STANDARDS.
2) SEE SHEET C2 FOR WEB CUTTING DIAGRAM AND FLANGE ASSEMBLY DIAGRAM.
3) SEE SHEET GN1 THRU GN3 FOR GENERAL NOTES AND PAINT NOTES.
4) SEE SHEET GN2 FOR GIRDER ASSEMBLY WELD DETAILS AND WELD TERMINATION DETAILS.
5) SEE SHEET 14B FOR B.O.M.

REV / RELEASE RECORD		
0	FINAL APPROVAL / PROD.	09-20-19
C	FINAL APPROVAL	06-21-19
B	REL. FOR APPROVAL	05-23-19
A	REL. FOR INTERNAL REVIEW	04-08-19

GIRDER 14G14A

WABASH

WABASH STEEL COMPANY, LLC
2007 OLIPHANT DRIVE
VINCENNES, INDIANA 47591

Drawn	Checked	Approved	Revised
DMW 3-24-19	DJW 3-27-19		

PROJECT NO. CUY-IR490/SR 010-2.09/19.28
SFN: 1801519 ~ REF. NO. 20
PID NO. 96833
BR. NO. CUY-010-2039
NORFOLK SOUTHERN RAILROAD OVER OH-10
CUYAHOGA COUNTY, OHIO
CONTRACTOR: KOKOSING
OWNER: OHIO DEPARTMENT OF TRANSPORTATION

Shop Paint: See Dwg. GN1 thru GN3

Edge Distance: AS NOTED | Holes: 1-1/16"Ø U.N.O.

WSLLC No.: 179-18 | Sh. 14AB

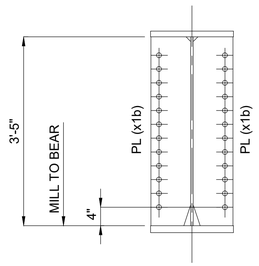

SECTION "A-A"

(2 PLACES)

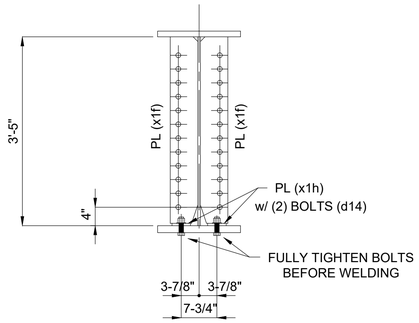

SECTION "B-B"

(5 PLACES)

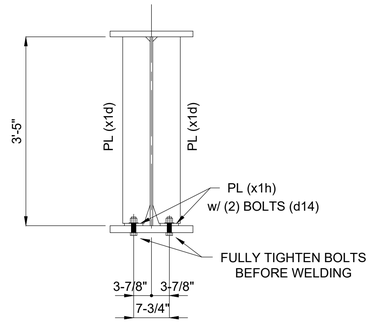

SECTION "C-C"

(10 PLACES)

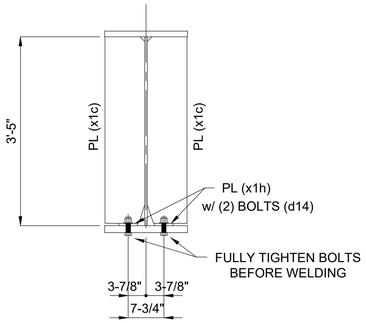

SECTION "D-D"

(2 PLACES)

BILL OF MATERIAL

Kind	Section	Length	Req.	Mark	Grade	Remarks
		GIRDERS	1	14G14A		(15 768 #)
PL	41" x 9/16"	56'-10 7/16"	1	a14	A709-50-F2	4 469
PL	18" x 1-1/4"	57'-1 1/16"	1	b14	A709-50-T2	4 367
PL	18" x 1-1/2"	57'-1 1/16"	1	c14	A709-50-F2	5 241
BOLT	1" HSBN1W	0'-3 3/4"	68	d14	F3125 HS TYPE 1 (GALV)	113
PL	8-5/8" x 1/2"	3'-5"	4	x1b	A709-50	200
PL	8-5/8" x 1/2"	3'-4 1/2"	4	x1c	A709-50	198
PL	6" x 1/2"	3'-4 1/2"	20	x1d	A709-50	690
PL	6" x 1/2"	3'-4 1/2"	10	x1f	A709-50	345
PL	4" x 1/2"	0'-7 1/2"	34	x1h	A709-50	145

1

ONE - GIRDER - 14G14A

SHOP NOTES:

1) SEE SHEET X1 FOR GIRDER STANDARDS.
2) SEE SHEET C2 FOR WEB CUTTING DIAGRAM AND FLANGE ASSEMBLY DIAGRAM.
3) SEE SHEET GN1 THRU GN3 FOR GENERAL NOTES AND PAINT NOTES.
4) SEE SHEET GN2 FOR GIRDER ASSEMBLY WELD DETAILS AND WELD TERMINATION DETAILS.

1	REVISIONS TO SHOP BOLTS	08-11-20

REV / RELEASE RECORD

0	FINAL APPROVAL / PROD.	09-20-19
C	FINAL APPROVAL	06-21-19
B	REL. FOR APPROVAL	05-23-19
A	REL. FOR INTERNAL REVIEW	04-08-19

GIRDER 14G14A

WABASH

WABASH STEEL COMPANY, LLC
2007 OLIPHANT DRIVE
VINCENNES, INDIANA 47591

Drawn	Checked	Approved	Revised
DMW 3-24-19	DJW 3-27-19		

PROJECT NO. CUY-IR490/SR 010-2.09/19.28
SFN: 1801519 ~ REF. NO. 20
PID NO. 96833
BR. NO. CUY-010-2039
NORFOLK SOUTHERN RAILROAD OVER OH-10
CUYAHOGA COUNTY, OHIO
CONTRACTOR: KOKOSING
OWNER: OHIO DEPARTMENT OF TRANSPORTATION

Shop Paint: See Dwg. GN1 thru GN3

Edge Distance: AS NOTED | Holes: 1-1/16"Ø U.N.O.

WSLLC No.: 179-18 | Sh. 14B

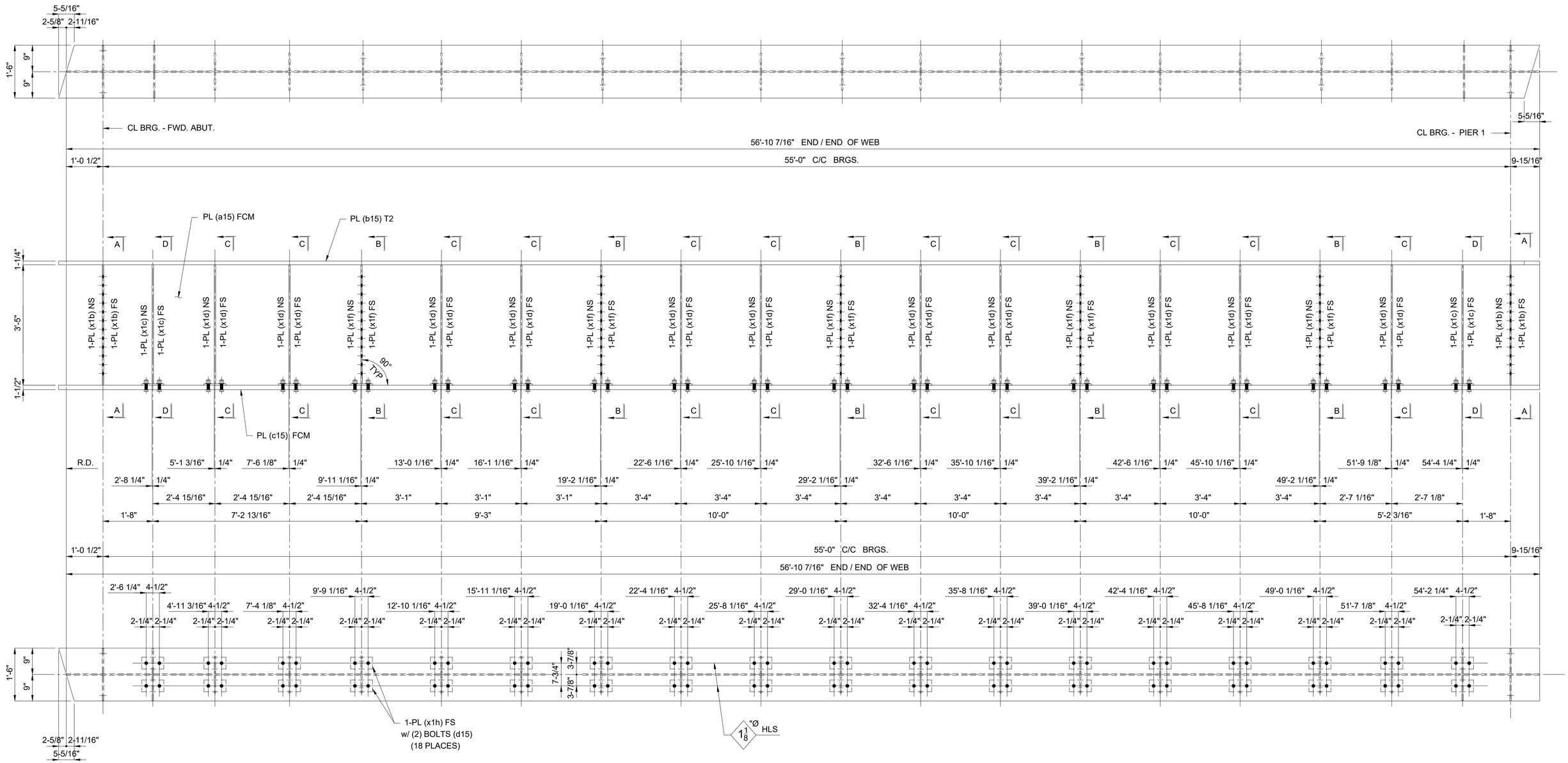

ONE - GIRDER - 15G15A

SHOP NOTES:

1) SEE SHEET X1 FOR GIRDER STANDARDS.
2) SEE SHEET C2 FOR WEB CUTTING DIAGRAM AND FLANGE ASSEMBLY DIAGRAM.
3) SEE SHEET GN1 THRU GN3 FOR GENERAL NOTES AND PAINT NOTES.
4) SEE SHEET GN2 FOR GIRDER ASSEMBLY WELD DETAILS AND WELD TERMINATION DETAILS.
5) SEE SHEET 15B FOR B.O.M.

REV / RELEASE RECORD

0	FINAL APPROVAL / PROD.	09-20-19
C	FINAL APPROVAL	06-21-19
B	REL. FOR APPROVAL	05-23-19
A	REL. FOR INTERNAL REVIEW	04-08-19

GIRDER 15G15A

WABASH

WABASH STEEL COMPANY, LLC
2007 OLIPHANT DRIVE
VINCENNES, INDIANA 47591

Drawn	Checked	Approved	Revised
DMW 3-24-19	DJW 3-27-19		

PROJECT NO. CUY-IR490/SR 010-2.09/19.28
SFN: 1801519 ~ REF. NO. 20
PID NO. 96833
BR. NO. CUY-010-2039
NORFOLK SOUTHERN RAILROAD OVER OH-10
CUYAHOGA COUNTY, OHIO
CONTRACTOR: KOKOSING
OWNER: OHIO DEPARTMENT OF TRANSPORTATION

Shop Paint: See Dwg. GN1 thru GN3

Edge Distance: AS NOTED | Holes: 1-1/16"Ø U.N.O.

WSLLC No.: 179-18 | Sh. 15AB

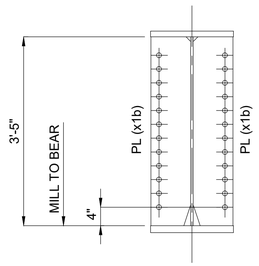

SECTION "A-A"

(2 PLACES)

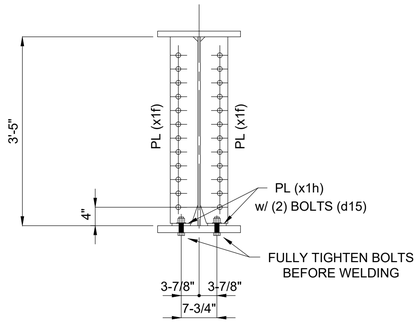

SECTION "B-B"

(5 PLACES)

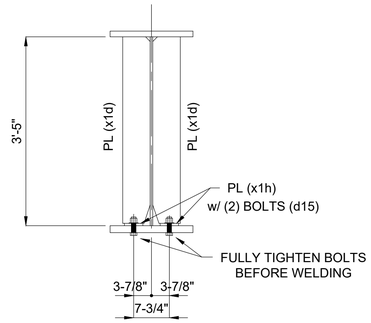

SECTION "C-C"

(11 PLACES)

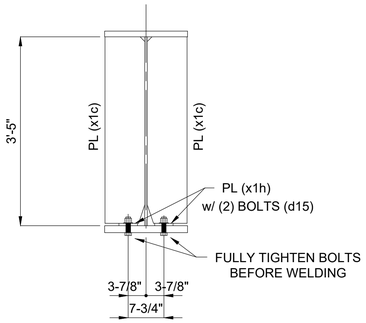

SECTION "D-D"

(2 PLACES)

BILL OF MATERIAL

Kind	Section	Length	Req.	Mark	Grade	Remarks
		GIRDERS	1	15G15A		(15 852 #)
PL	41" x 9/16"	56'-10 7/16"	1	a15	A709-50-F2	4 469
PL	18" x 1-1/4"	57'-1 1/16"	1	b15	A709-50-T2	4 367
PL	18" x 1-1/2"	57'-1 1/16"	1	c15	A709-50-F2	5 241
BOLT	1" HSBN1W	0'-3 3/4"	72	d15	F3125 HS TYPE 1 (GALV)	120
PL	8-5/8" x 1/2"	3'-5"	4	x1b	A709-50	200
PL	8-5/8" x 1/2"	3'-4 1/2"	4	x1c	A709-50	198
PL	6" x 1/2"	3'-4 1/2"	22	x1d	A709-50	759
PL	6" x 1/2"	3'-4 1/2"	10	x1f	A709-50	345
PL	4" x 1/2"	0'-7 1/2"	36	x1h	A709-50	153

1

ONE - GIRDER - 15G15A

SHOP NOTES:

1) SEE SHEET X1 FOR GIRDER STANDARDS.
2) SEE SHEET C2 FOR WEB CUTTING DIAGRAM AND FLANGE ASSEMBLY DIAGRAM.
3) SEE SHEET GN1 THRU GN3 FOR GENERAL NOTES AND PAINT NOTES.
4) SEE SHEET GN2 FOR GIRDER ASSEMBLY WELD DETAILS AND WELD TERMINATION DETAILS.

1	REVISIONS TO SHOP BOLTS	08-11-20

REV / RELEASE RECORD

0	FINAL APPROVAL / PROD.	09-20-19
C	FINAL APPROVAL	06-21-19
B	REL. FOR APPROVAL	05-23-19
A	REL. FOR INTERNAL REVIEW	04-08-19

GIRDER 15G15A

WABASH

WABASH STEEL COMPANY, LLC
2007 OLIPHANT DRIVE
VINCENNES, INDIANA 47591

Drawn	Checked	Approved	Revised
DMW 3-24-19	DJW 3-27-19		

PROJECT NO. CUY-IR490/SR 010-2.09/19.28
SFN: 1801519 ~ REF. NO. 20
PID NO. 96833
BR. NO. CUY-010-2039
NORFOLK SOUTHERN RAILROAD OVER OH-10
CUYAHOGA COUNTY, OHIO
CONTRACTOR: KOKOSING
OWNER: OHIO DEPARTMENT OF TRANSPORTATION

Shop Paint: See Dwg. GN1 thru GN3

Edge Distance: AS NOTED | Holes: 1-1/16"Ø U.N.O.

WSLLC No.: 179-18 | Sh. 15B

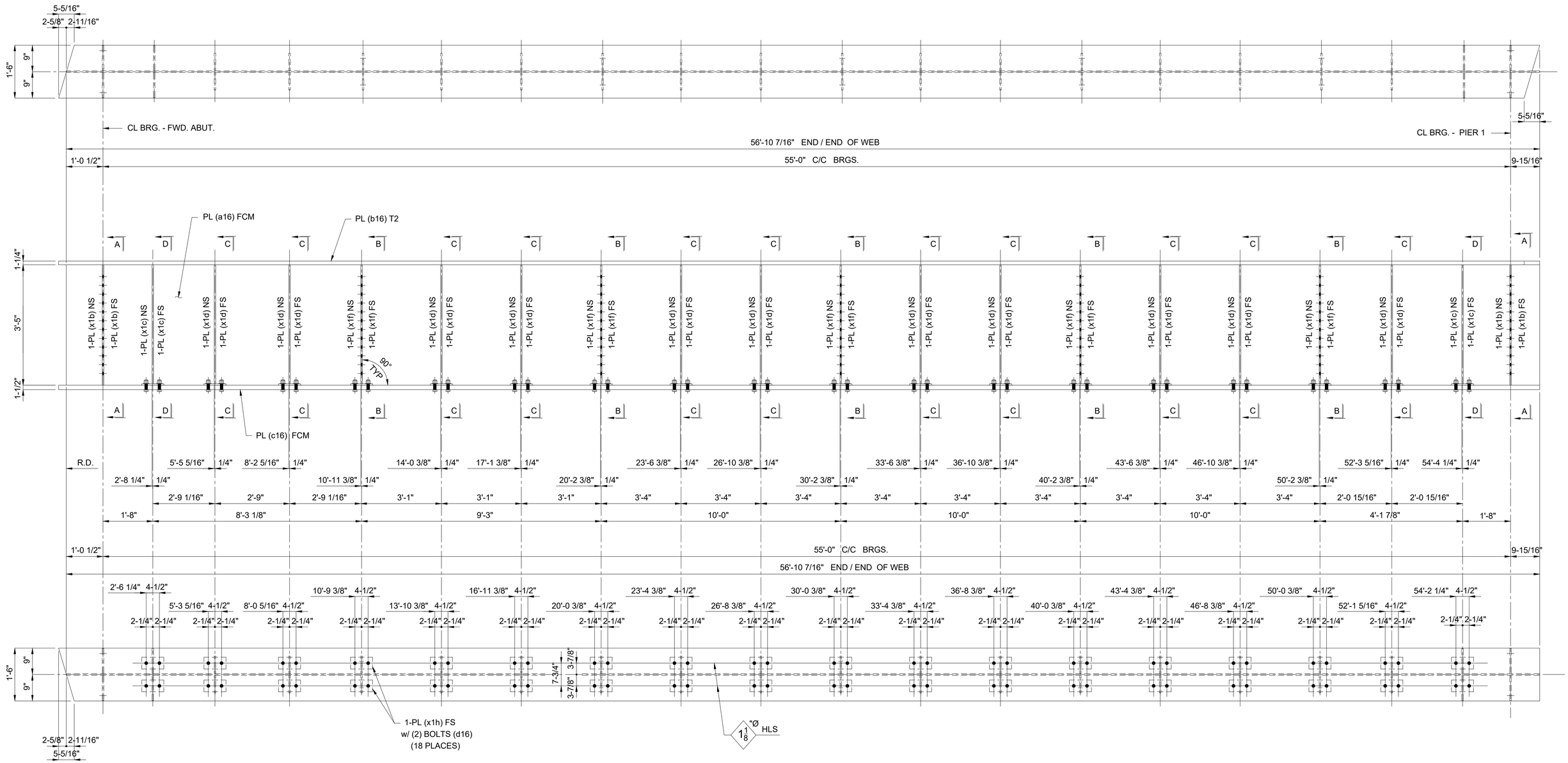

ONE - GIRDER - 16G16A

SHOP NOTES:

1) SEE SHEET X1 FOR GIRDER STANDARDS.
2) SEE SHEET C2 FOR WEB CUTTING DIAGRAM AND FLANGE ASSEMBLY DIAGRAM.
3) SEE SHEET GN1 THRU GN3 FOR GENERAL NOTES AND PAINT NOTES.
4) SEE SHEET GN2 FOR GIRDER ASSEMBLY WELD DETAILS AND WELD TERMINATION DETAILS.
5) SEE SHEET 16B FOR B.O.M.

REV / RELEASE RECORD		
0	FINAL APPROVAL / PROD.	09-20-19
C	FINAL APPROVAL	06-21-19
B	REL. FOR APPROVAL	05-23-19
A	REL. FOR INTERNAL REVIEW	04-08-19

GIRDER 16G16A

WABASH

WABASH STEEL COMPANY, LLC
2007 OLIPHANT DRIVE
VINCENNES, INDIANA 47591

Drawn	Checked	Approved	Revised
DMW 3-24-19	DJW 3-27-19		

PROJECT NO. CUY-IR490/SR 010-2.09/19.28
SFN: 1801519 ~ REF. NO. 20
PID NO. 96833
BR. NO. CUY-010-2039
NORFOLK SOUTHERN RAILROAD OVER OH-10
CUYAHOGA COUNTY, OHIO
CONTRACTOR: KOKOSING
OWNER: OHIO DEPARTMENT OF TRANSPORTATION

Shop Paint: See Dwg. GN1 thru GN3

Edge Distance: AS NOTED | Holes: 1-1/16"Ø U.N.O.

WSLLC No.: 179-18 | Sh. 16AB

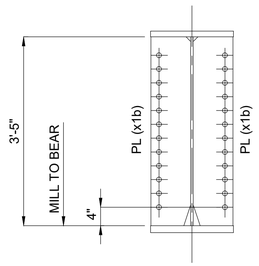

SECTION "A-A"

(2 PLACES)

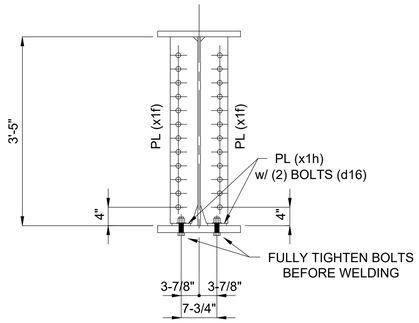

SECTION "B-B"

(5 PLACES)

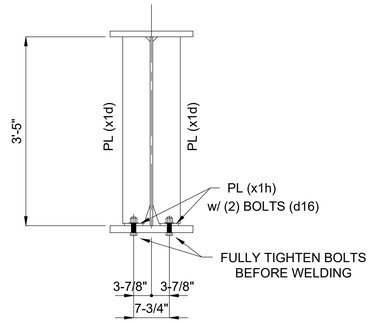

SECTION "C-C"

(11 PLACES)

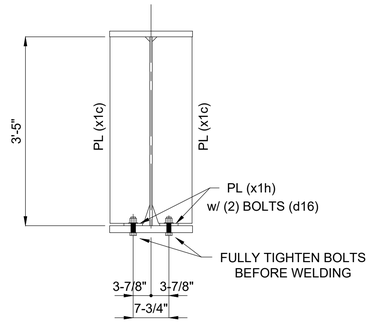

SECTION "D-D"

(2 PLACES)

BILL OF MATERIAL

Kind	Section	Length	Req.	Mark	Grade	Remarks
		GIRDERS	1	16G16A		(15 852 #)
PL	41" x 9/16"	56'-10 7/16"	1	a16	A709-50-F2	4 469
PL	18" x 1-1/4"	57'-1 1/16"	1	b16	A709-50-T2	4 367
PL	18" x 1-1/2"	57'-1 1/16"	1	c16	A709-50-F2	5 241
BOLT	1" HSBN1W	0'-3 3/4"	72	d16	F3125 HS TYPE 1 (GALV)	120
PL	8-5/8" x 1/2"	3'-5"	4	x1b	A709-50	200
PL	8-5/8" x 1/2"	3'-4 1/2"	4	x1c	A709-50	198
PL	6" x 1/2"	3'-4 1/2"	22	x1d	A709-50	759
PL	6" x 1/2"	3'-4 1/2"	10	x1f	A709-50	345
PL	4" x 1/2"	0'-7 1/2"	36	x1h	A709-50	153

1

ONE - GIRDER - 16G16A

SHOP NOTES:

1) SEE SHEET X1 FOR GIRDER STANDARDS.
2) SEE SHEET C2 FOR WEB CUTTING DIAGRAM AND FLANGE ASSEMBLY DIAGRAM.
3) SEE SHEET GN1 THRU GN3 FOR GENERAL NOTES AND PAINT NOTES.
4) SEE SHEET GN2 FOR GIRDER ASSEMBLY WELD DETAILS AND WELD TERMINATION DETAILS.

1	REVISIONS TO SHOP BOLTS	08-11-20

REV / RELEASE RECORD

0	FINAL APPROVAL / PROD.	09-20-19
C	FINAL APPROVAL	06-21-19
B	REL. FOR APPROVAL	05-23-19
A	REL. FOR INTERNAL REVIEW	04-08-19

GIRDER 16G16A

WABASH

WABASH STEEL COMPANY, LLC
2007 OLIPHANT DRIVE
VINCENNES, INDIANA 47591

Drawn	Checked	Approved	Revised
DMW 3-24-19	DJW 3-27-19		

PROJECT NO. CUY-IR490/SR 010-2.09/19.28
SFN: 1801519 ~ REF. NO. 20
PID NO. 96833
BR. NO. CUY-010-2039
NORFOLK SOUTHERN RAILROAD OVER OH-10
CUYAHOGA COUNTY, OHIO
CONTRACTOR: KOKOSING
OWNER: OHIO DEPARTMENT OF TRANSPORTATION

Shop Paint: See Dwg. GN1 thru GN3

Edge Distance: AS NOTED | Holes: 1-1/16"Ø U.N.O.

WSLLC No.: 179-18 | Sh. 16B

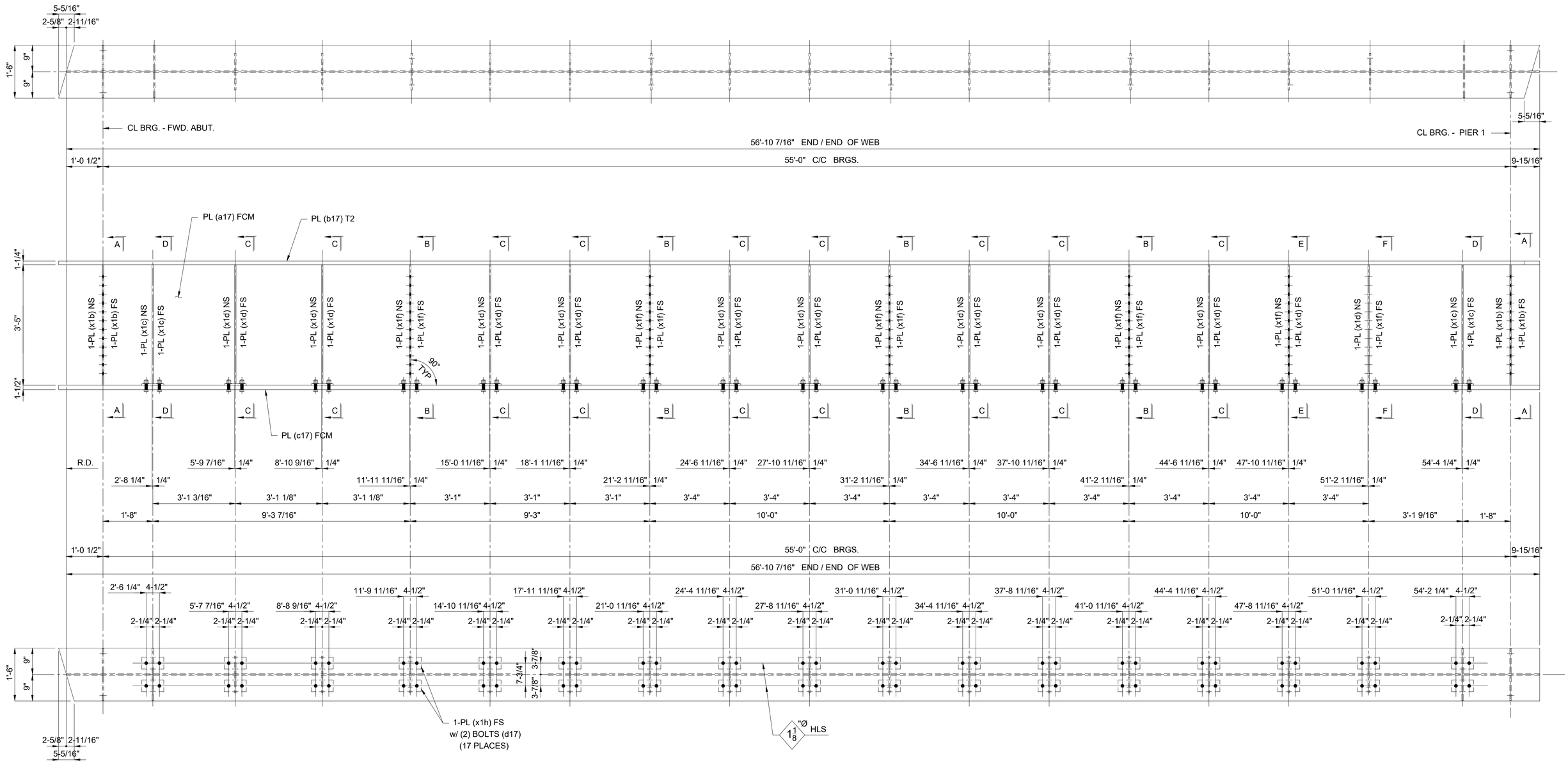

ONE - GIRDER - 17G17A

SHOP NOTES:

1) SEE SHEET X1 FOR GIRDER STANDARDS.
2) SEE SHEET C2 FOR WEB CUTTING DIAGRAM AND FLANGE ASSEMBLY DIAGRAM.
3) SEE SHEET GN1 THRU GN3 FOR GENERAL NOTES AND PAINT NOTES.
4) SEE SHEET GN2 FOR GIRDER ASSEMBLY WELD DETAILS AND WELD TERMINATION DETAILS.
5) SEE SHEET 17B FOR B.O.M.

REV / RELEASE RECORD

0	FINAL APPROVAL / PROD.	09-20-19
C	FINAL APPROVAL	06-21-19
B	REL. FOR APPROVAL	05-23-19
A	REL. FOR INTERNAL REVIEW	04-08-19

GIRDER 17G17A

WABASH

WABASH STEEL COMPANY, LLC
2007 OLIPHANT DRIVE
VINCENNES, INDIANA 47591

Drawn	Checked	Approved	Revised
DMW 3-24-19	DJW 3-27-19		

PROJECT NO. CUY-IR490/SR 010-2.09/19.28
SFN: 1801519 ~ REF. NO. 20
PID NO. 96833
BR. NO. CUY-010-2039
NORFOLK SOUTHERN RAILROAD OVER OH-10
CUYAHOGA COUNTY, OHIO
CONTRACTOR: KOKOSING
OWNER: OHIO DEPARTMENT OF TRANSPORTATION

Shop Paint: See Dwg. GN1 thru GN3

Edge Distance: AS NOTED | Holes: 1-1/16"Ø U.N.O.

WSLLC No.: 179-18 | Sh. 17AB

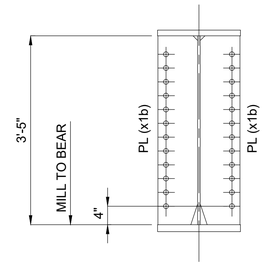

SECTION "A-A"

(2 PLACES)

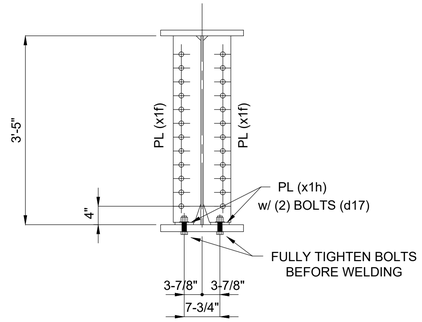

SECTION "B-B"

(4 PLACES)

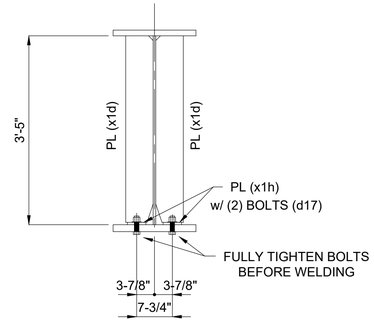

SECTION "C-C"

(9 PLACES)

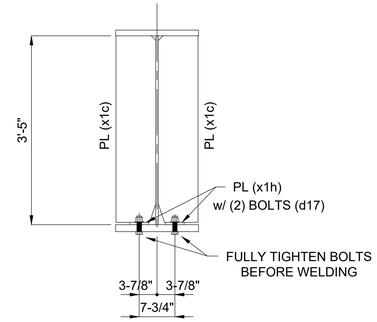

SECTION "D-D"

(2 PLACES)

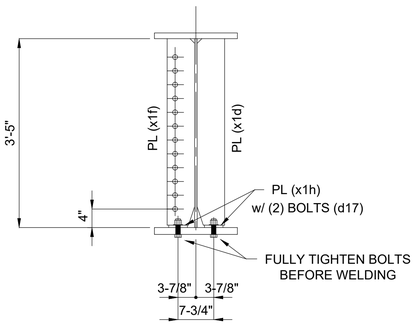

SECTION "E-E"

(ONE PLACE)

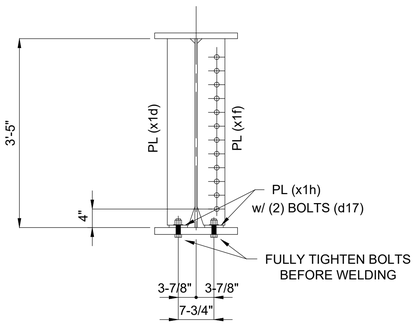

SECTION "F-F"

(ONE PLACE)

BILL OF MATERIAL

Kind	Section	Length	Req.	Mark	Grade	Remarks
		GIRDERS	1	17G17A		(15 768 #)
PL	41" x 9/16"	56'-10 7/16"	1	a17	A709-50-F2	4 469
PL	18" x 1-1/4"	57'-1 1/16"	1	b17	A709-50-T2	4 367
PL	18" x 1-1/2"	57'-1 1/16"	1	c17	A709-50-F2	5 241
BOLT	1" HSBN1W	0'-3 3/4"	68	d17	F3125 HS TYPE 1 (GALV)	113
PL	8-5/8" x 1/2"	3'-5"	4	x1b	A709-50	200
PL	8-5/8" x 1/2"	3'-4 1/2"	4	x1c	A709-50	198
PL	6" x 1/2"	3'-4 1/2"	20	x1d	A709-50	690
PL	6" x 1/2"	3'-4 1/2"	10	x1f	A709-50	345
PL	4" x 1/2"	0'-7 1/2"	34	x1h	A709-50	145

1

ONE - GIRDER - 17G17A

SHOP NOTES:

1) SEE SHEET X1 FOR GIRDER STANDARDS.
2) SEE SHEET C2 FOR WEB CUTTING DIAGRAM AND FLANGE ASSEMBLY DIAGRAM.
3) SEE SHEET GN1 THRU GN3 FOR GENERAL NOTES AND PAINT NOTES.
4) SEE SHEET GN2 FOR GIRDER ASSEMBLY WELD DETAILS AND WELD TERMINATION DETAILS.

1	REVISIONS TO SHOP BOLTS	08-11-20

REV / RELEASE RECORD

0	FINAL APPROVAL / PROD.	09-20-19
C	FINAL APPROVAL	06-21-19
B	REL. FOR APPROVAL	05-23-19
A	REL. FOR INTERNAL REVIEW	04-08-19

GIRDER 17G17A

WABASH

WABASH STEEL COMPANY, LLC
2007 OLIPHANT DRIVE
VINCENNES, INDIANA 47591

Drawn	Checked	Approved	Revised
DMW 3-24-19	DJW 3-27-19		

PROJECT NO. CUY-IR490/SR 010-2.09/19.28
SFN: 1801519 ~ REF. NO. 20
PID NO. 96833
BR. NO. CUY-010-2039
NORFOLK SOUTHERN RAILROAD OVER OH-10
CUYAHOGA COUNTY, OHIO
CONTRACTOR: KOKOSING
OWNER: OHIO DEPARTMENT OF TRANSPORTATION

Shop Paint: See Dwg. GN1 thru GN3

Edge Distance: AS NOTED | Holes: 1-1/16"Ø U.N.O.

WSLLC No.: 179-18 | Sh. 17B

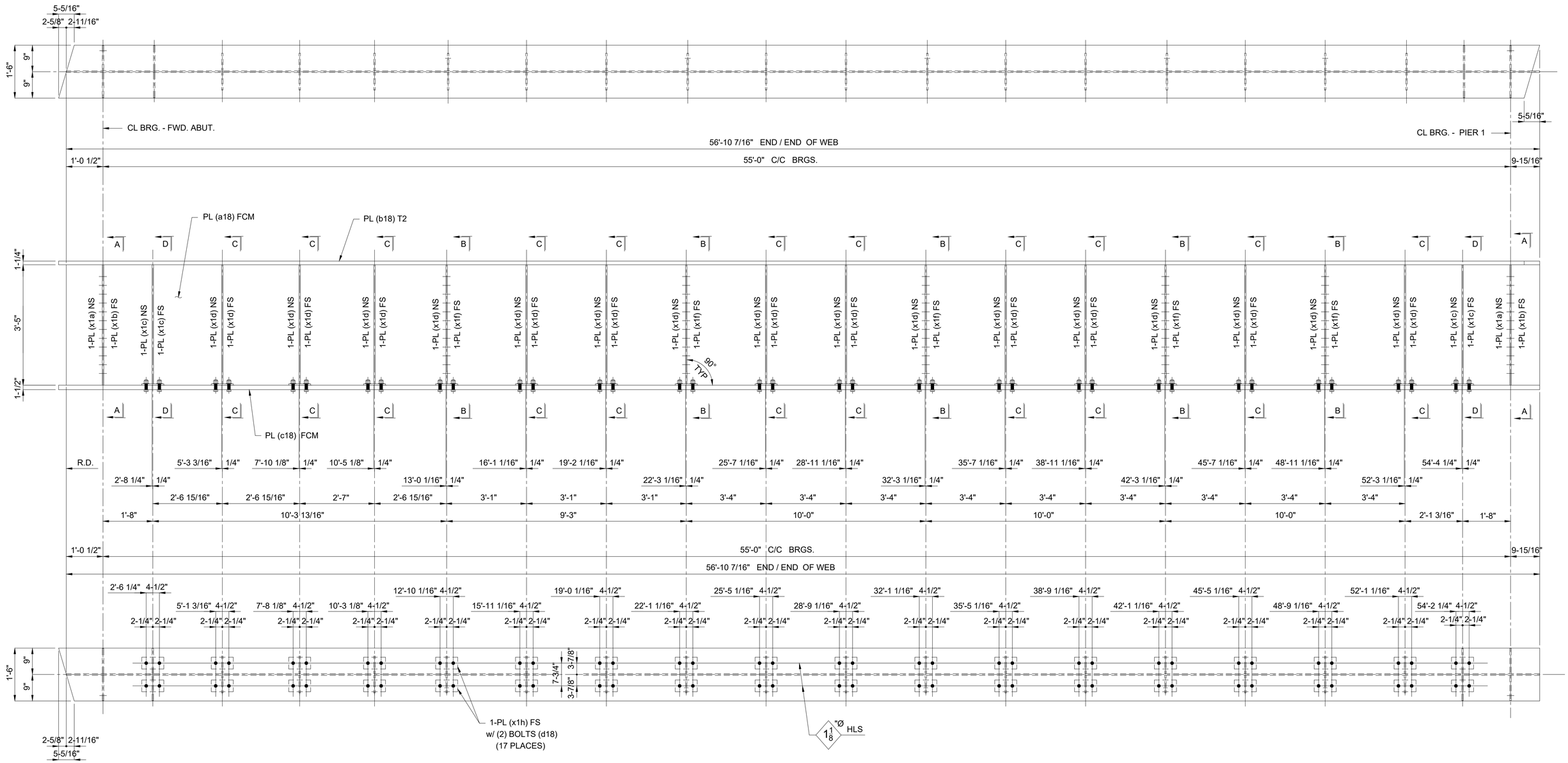

ONE - GIRDER - 18G18A

SHOP NOTES:

1) SEE SHEET X1 FOR GIRDER STANDARDS.
2) SEE SHEET C1 FOR WEB CUTTING DIAGRAM AND FLANGE ASSEMBLY DIAGRAM.
3) SEE SHEET GN1 THRU GN3 FOR GENERAL NOTES AND PAINT NOTES.
4) SEE SHEET GN2 FOR GIRDER ASSEMBLY WELD DETAILS AND WELD TERMINATION DETAILS.
5) SEE SHEET 18B FOR B.O.M.

REV / RELEASE RECORD		
0	FINAL APPROVAL / PROD.	09-20-19
C	FINAL APPROVAL	06-21-19
B	REL. FOR APPROVAL	05-23-19
A	REL. FOR INTERNAL REVIEW	04-08-19

GIRDER 18G18A

WABASH

WABASH STEEL COMPANY, LLC
2007 OLIPHANT DRIVE
VINCENNES, INDIANA 47591

Drawn	Checked	Approved	Revised
DMW 3-24-19	DJW 3-27-19		

PROJECT NO. CUY-IR490/SR 010-2.09/19.28
SFN: 1801519 ~ REF. NO. 20
PID NO. 96833
BR. NO. CUY-010-2039
NORFOLK SOUTHERN RAILROAD OVER OH-10
CUYAHOGA COUNTY, OHIO
CONTRACTOR: KOKOSING
OWNER: OHIO DEPARTMENT OF TRANSPORTATION

Shop Paint: See Dwg. GN1 thru GN3

Edge Distance: AS NOTED | Holes: 1-1/16"Ø U.N.O.

WSLLC No.: 179-18 | Sh. 18AB

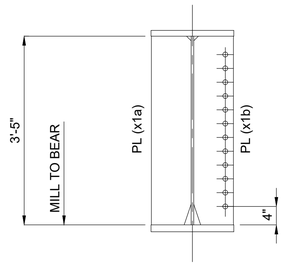

SECTION "A-A"

(2 PLACES)

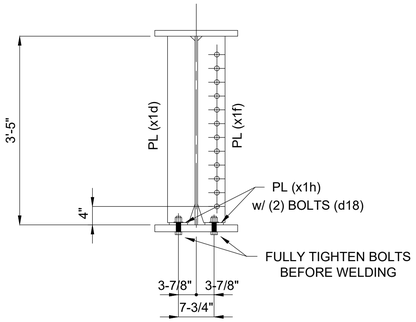

SECTION "B-B"

(5 PLACES)

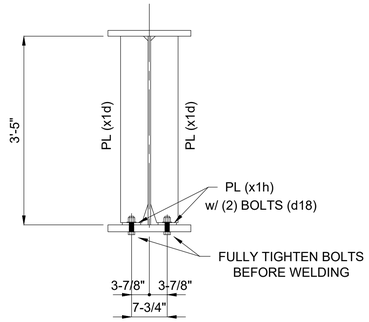

SECTION "C-C"

(11 PLACES)

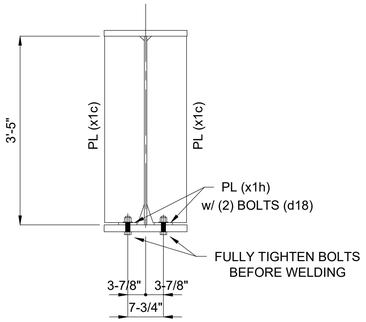

SECTION "D-D"

(2 PLACES)

BILL OF MATERIAL

Kind	Section	Length	Req.	Mark	Grade	Remarks
		GIRDERS	1	18G18A		(15 852 #)
PL	41" x 9/16"	56'-10 7/16"	1	a18	A709-50-F2	4 469
PL	18" x 1-1/4"	57'-1 1/16"	1	b18	A709-50-T2	4 367
PL	18" x 1-1/2"	57'-1 1/16"	1	c18	A709-50-F2	5 241
BOLT	1" HSBN1W	0'-3 3/4"	72	d18	F3125 HS TYPE 1 (GALV)	120
PL	8-5/8" x 1/2"	3'-5"	2	x1a	A709-50	100
PL	8-5/8" x 1/2"	3'-5"	2	x1b	A709-50	100
PL	8-5/8" x 1/2"	3'-4 1/2"	4	x1c	A709-50	198
PL	6" x 1/2"	3'-4 1/2"	27	x1d	A709-50	932
PL	6" x 1/2"	3'-4 1/2"	5	x1f	A709-50	172
PL	4" x 1/2"	0'-7 1/2"	36	x1h	A709-50	153

1

ONE - GIRDER - 18G18A

SHOP NOTES:

1) SEE SHEET X1 FOR GIRDER STANDARDS.
2) SEE SHEET C1 FOR WEB CUTTING DIAGRAM AND FLANGE ASSEMBLY DIAGRAM.
3) SEE SHEET GN1 THRU GN3 FOR GENERAL NOTES AND PAINT NOTES.
4) SEE SHEET GN2 FOR GIRDER ASSEMBLY WELD DETAILS AND WELD TERMINATION DETAILS.

1	REVISIONS TO SHOP BOLTS	08-11-20

REV / RELEASE RECORD

0	FINAL APPROVAL / PROD.	09-20-19
C	FINAL APPROVAL	06-21-19
B	REL. FOR APPROVAL	05-03-19
A	REL. FOR INTERNAL REVIEW	04-08-19

GIRDER 18G18A

WABASH

WABASH STEEL COMPANY, LLC
2007 OLIPHANT DRIVE
VINCENNES, INDIANA 47591

Drawn	Checked	Approved	Revised
DMW 3-24-19	DJW 3-27-19		

PROJECT NO. CUY-IR490/SR 010-2.09/19.28
SFN: 1801519 ~ REF. NO. 20
PID NO. 96833
BR. NO. CUY-010-2039
NORFOLK SOUTHERN RAILROAD OVER OH-10
CUYAHOGA COUNTY, OHIO
CONTRACTOR: KOKOSING
OWNER: OHIO DEPARTMENT OF TRANSPORTATION

Shop Paint: See Dwg. GN1 thru GN3

Edge Distance: AS NOTED | Holes: 1-1/16"Ø U.N.O.

WSLLC No.: 179-18 | Sh. 18B

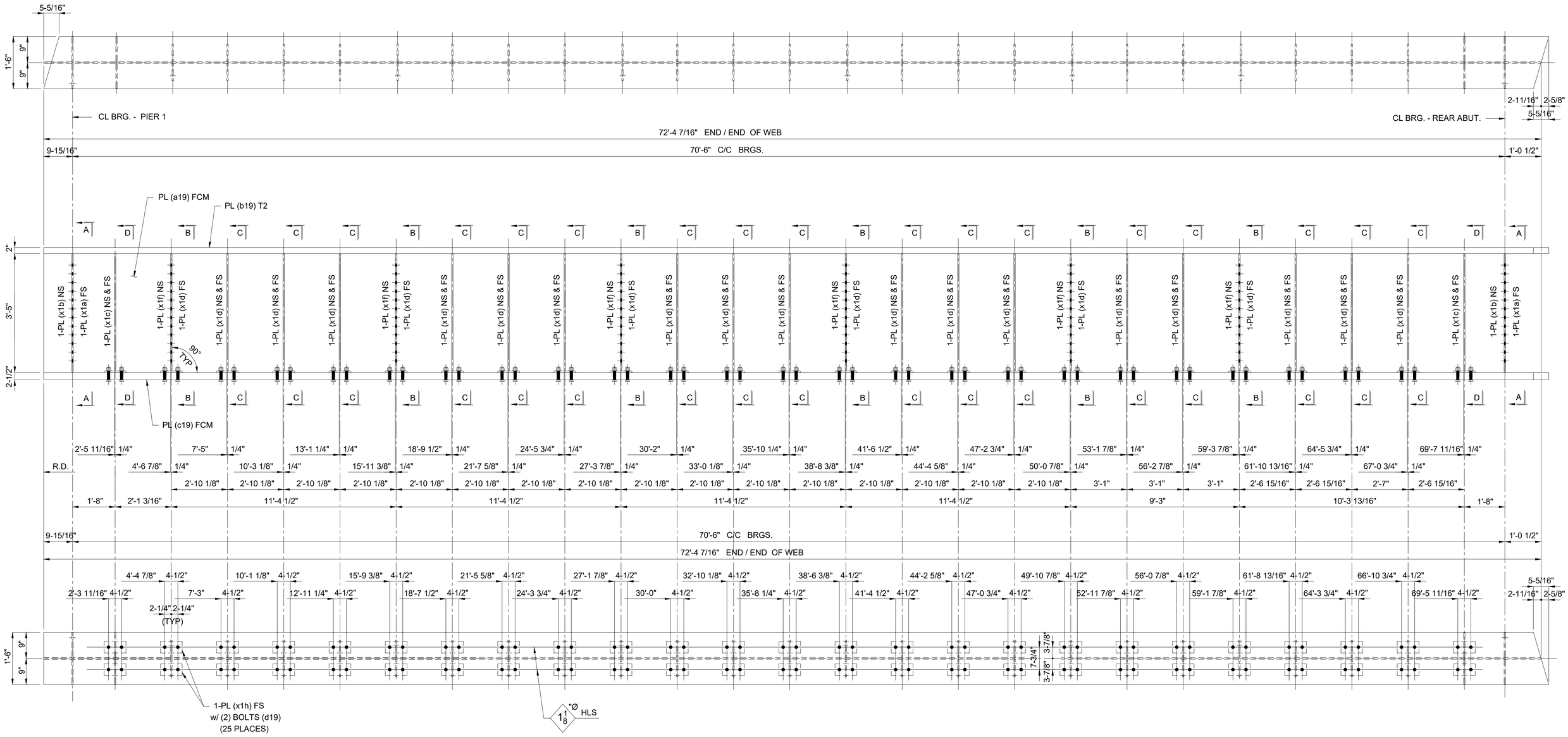

ONE - GIRDER - 19G1B

SHOP NOTES:

1) SEE SHEET X1 FOR GIRDER STANDARDS.
2) SEE SHEET C3 FOR WEB CUTTING DIAGRAM AND FLANGE ASSEMBLY DIAGRAM.
3) SEE SHEET GN1 THRU GN3 FOR GENERAL NOTES AND PAINT NOTES.
4) SEE SHEET GN2 FOR GIRDER ASSEMBLY WELD DETAILS AND WELD TERMINATION DETAILS.
5) SEE SHEET 19B FOR B.O.M.

REV / RELEASE RECORD		
0	FINAL APPROVAL / PROD.	09-20-19
C	FINAL APPROVAL	06-21-19
B	REL. FOR APPROVAL	05-23-19
A	REL. FOR INTERNAL REVIEW	04-08-19

GIRDER 19G1B

WABASH

WABASH STEEL COMPANY, LLC
2007 OLIPHANT DRIVE
VINCENNES, INDIANA 47591

Drawn	Checked	Approved	Revised
DMW 3-25-19	DJW 3-28-19		

PROJECT NO. CUY-IR490/SR 010-2.09/19.28
SFN: 1801519 ~ REF. NO. 20
PID NO. 96833
BR. NO. CUY-010-2039
NORFOLK SOUTHERN RAILROAD OVER OH-10
CUYAHOGA COUNTY, OHIO
CONTRACTOR: KOKOSING
OWNER: OHIO DEPARTMENT OF TRANSPORTATION

Shop Paint: See Dwg. GN1 thru GN3

Edge Distance: AS NOTED | Holes: 1-1/16"Ø U.N.O.

WSLLC No.: 179-18 | Sh. 19AB

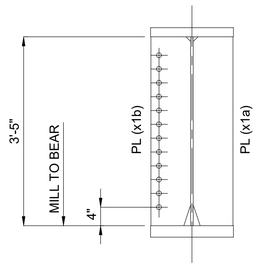

SECTION "A-A"

(2 PLACES)

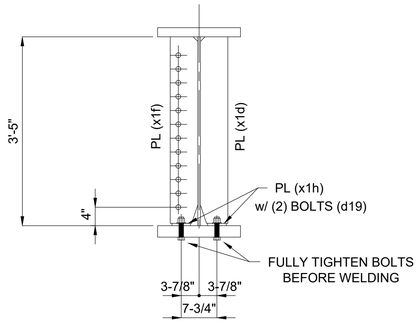

SECTION "B-B"

(6 PLACES)

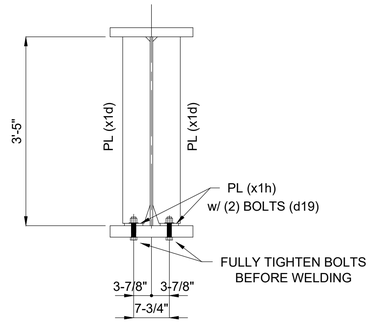

SECTION "C-C"

(17 PLACES)

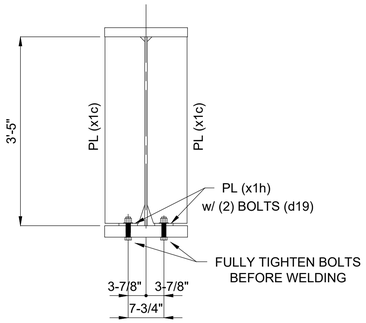

SECTION "D-D"

(2 PLACES)

BILL OF MATERIAL

Kind	Section	Length	Req.	Mark	Grade	Remarks
		GIRDERS	1	19G1B		(28 064 #)
PL	41" x 9/16"	72'-4 7/16"	1	a19	A709-50-F2	5 687
PL	18" x 2"	72'-7 1/16"	1	b19	A709-50-T2	8 885
PL	18" x 2-1/2"	72'-7 1/16"	1	c19	A709-50-F2	11 106
BOLT	1" HSBN1W	0'-4 3/4"	100	d19	F3125 HS TYPE 1 (GALV)	188
PL	8-5/8" x 1/2"	3'-5"	2	x1a	A709-50	100
PL	8-5/8" x 1/2"	3'-5"	2	x1b	A709-50	100
PL	8-5/8" x 1/2"	3'-4 1/2"	4	x1c	A709-50	198
PL	6" x 1/2"	3'-4 1/2"	40	x1d	A709-50	1 380
PL	6" x 1/2"	3'-4 1/2"	6	x1f	A709-50	207
PL	4" x 1/2"	0'-7 1/2"	50	x1h	A709-50	213

1

ONE - GIRDER - 19G1B

SHOP NOTES:

1) SEE SHEET X1 FOR GIRDER STANDARDS.
2) SEE SHEET C3 FOR WEB CUTTING DIAGRAM AND FLANGE ASSEMBLY DIAGRAM.
3) SEE SHEET GN1 THRU GN3 FOR GENERAL NOTES AND PAINT NOTES.
4) SEE SHEET GN2 FOR GIRDER ASSEMBLY WELD DETAILS AND WELD TERMINATION DETAILS.

1	REVISIONS TO SHOP BOLTS	08-11-20

REV / RELEASE RECORD

0	FINAL APPROVAL / PROD.	09-20-19
C	FINAL APPROVAL	06-21-19
B	REL. FOR APPROVAL	05-23-19
A	REL. FOR INTERNAL REVIEW	04-08-19

GIRDER 19G1B

WABASH

WABASH STEEL COMPANY, LLC
2007 OLIPHANT DRIVE
VINCENNES, INDIANA 47591

Drawn	Checked	Approved	Revised
DMW 3-25-19	DJW 3-28-19		

PROJECT NO. CUY-IR490/SR 010-2.09/19.28
SFN: 1801519 ~ REF. NO. 20
PID NO. 96833
BR. NO. CUY-010-2039
NORFOLK SOUTHERN RAILROAD OVER OH-10
CUYAHOGA COUNTY, OHIO
CONTRACTOR: KOKOSING
OWNER: OHIO DEPARTMENT OF TRANSPORTATION

Shop Paint: See Dwg. GN1 thru GN3

Edge Distance: AS NOTED | Holes: 1-1/16"Ø U.N.O.

WSLLC No.: 179-18 | Sh. 19B

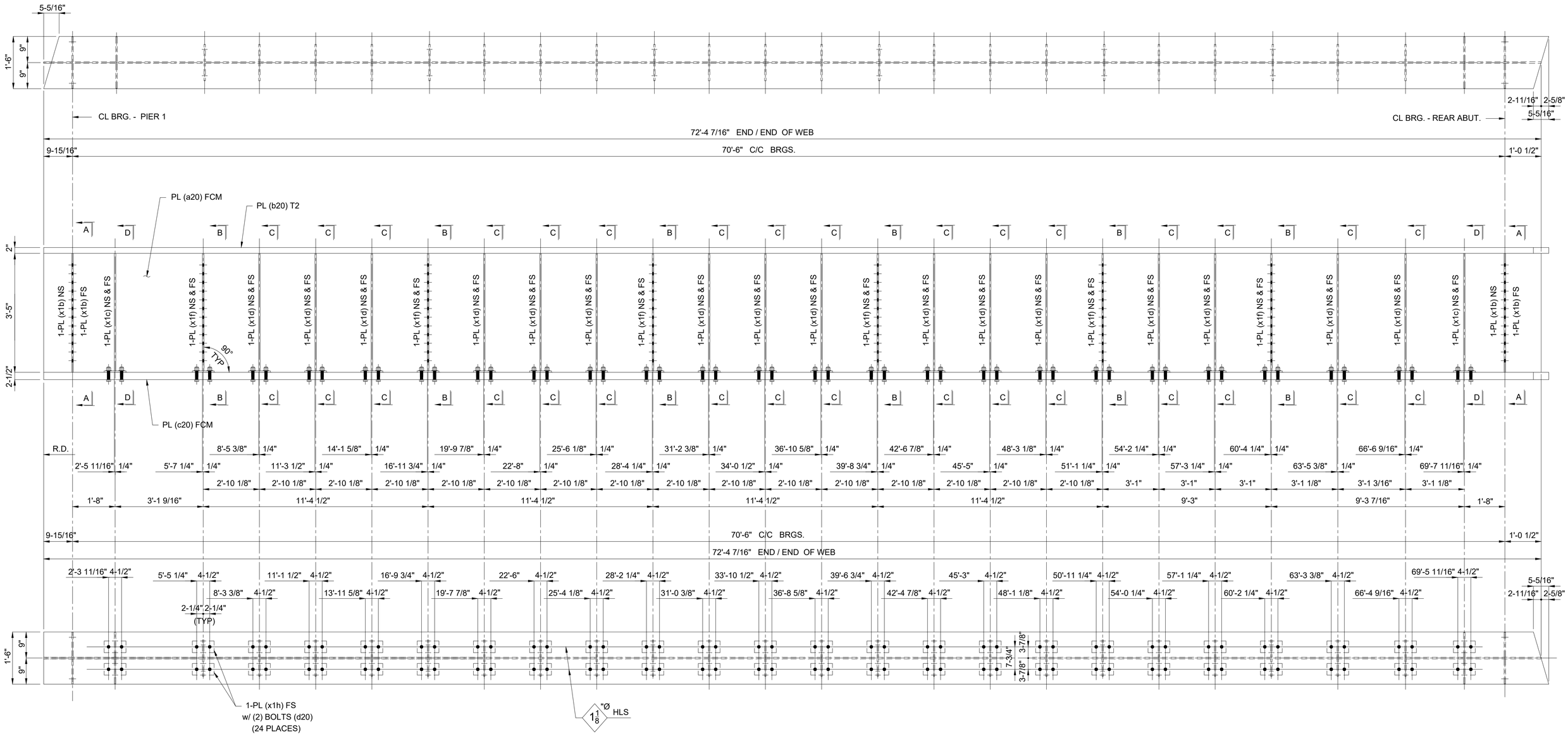

ONE - GIRDER - 20G2B

SHOP NOTES:

1) SEE SHEET X1 FOR GIRDER STANDARDS.
2) SEE SHEET C4 FOR WEB CUTTING DIAGRAM AND FLANGE ASSEMBLY DIAGRAM.
3) SEE SHEET GN1 THRU GN3 FOR GENERAL NOTES AND PAINT NOTES.
4) SEE SHEET GN2 FOR GIRDER ASSEMBLY WELD DETAILS AND WELD TERMINATION DETAILS.
5) SEE SHEET 20B FOR B.O.M.

REV / RELEASE RECORD

0	FINAL APPROVAL / PROD.	09-20-19
C	FINAL APPROVAL	06-21-19
B	REL. FOR APPROVAL	05-23-19
A	REL. FOR INTERNAL REVIEW	04-08-19

GIRDER 20G2B

WABASH

WABASH STEEL COMPANY, LLC
2007 OLIPHANT DRIVE
VINCENNES, INDIANA 47591

Drawn	Checked	Approved	Revised
DMW 3-25-19	DJW 3-28-19		

PROJECT NO. CUY-IR490/SR 010-2.09/19.28
SFN: 1801519 ~ REF. NO. 20
PID NO. 96833
BR. NO. CUY-010-2039
NORFOLK SOUTHERN RAILROAD OVER OH-10
CUYAHOGA COUNTY, OHIO
CONTRACTOR: KOKOSING
OWNER: OHIO DEPARTMENT OF TRANSPORTATION

Shop Paint: See Dwg. GN1 thru GN3

Edge Distance: AS NOTED | Holes: 1-1/16"Ø U.N.O.

WSLLC No.: 179-18 | Sh. 20AB

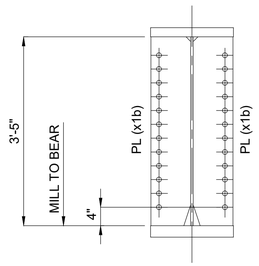

SECTION "A-A"

(2 PLACES)

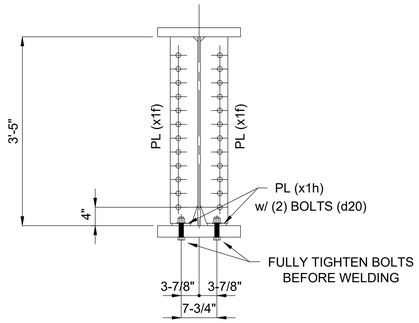

SECTION "B-B"

(6 PLACES)

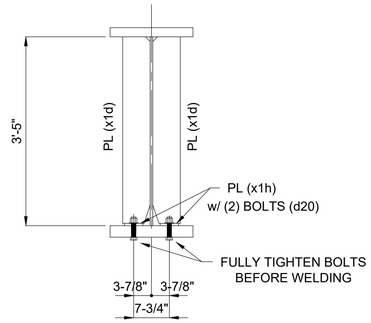

SECTION "C-C"

(16 PLACES)

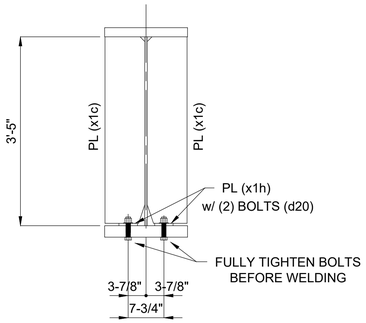

SECTION "D-D"

(2 PLACES)

BILL OF MATERIAL

Kind	Section	Length	Req.	Mark	Grade	Remarks
		GIRDERS	1	20G2B		(27 979 #)
PL	41" x 9/16"	72'-4 7/16"	1	a20	A709-50-F2	5 687
PL	18" x 2"	72'-7 1/16"	1	b20	A709-50-T2	8 885
PL	18" x 2-1/2"	72'-7 1/16"	1	c20	A709-50-F2	11 106
BOLT	1" HSBN1W	0'-4 3/4"	96	d20	F3125 HS TYPE 1 (GALV)	181
PL	8-5/8" x 1/2"	3'-5"	4	x1b	A709-50	200
PL	8-5/8" x 1/2"	3'-4 1/2"	4	x1c	A709-50	198
PL	6" x 1/2"	3'-4 1/2"	32	x1d	A709-50	1 104
PL	6" x 1/2"	3'-4 1/2"	12	x1f	A709-50	414
PL	4" x 1/2"	0'-7 1/2"	48	x1h	A709-50	204

1

ONE - GIRDER - 20G2B

SHOP NOTES:

1) SEE SHEET X1 FOR GIRDER STANDARDS.
2) SEE SHEET C4 FOR WEB CUTTING DIAGRAM AND FLANGE ASSEMBLY DIAGRAM.
3) SEE SHEET GN1 THRU GN3 FOR GENERAL NOTES AND PAINT NOTES.
4) SEE SHEET GN2 FOR GIRDER ASSEMBLY WELD DETAILS AND WELD TERMINATION DETAILS.

1	REVISIONS TO SHOP BOLTS	08-11-20

REV / RELEASE RECORD

0	FINAL APPROVAL / PROD.	09-20-19
C	FINAL APPROVAL	06-21-19
B	REL. FOR APPROVAL	05-23-19
A	REL. FOR INTERNAL REVIEW	04-08-19

GIRDER 20G2B

WABASH

WABASH STEEL COMPANY, LLC
2007 OLIPHANT DRIVE
VINCENNES, INDIANA 47591

Drawn	Checked	Approved	Revised
DMW 3-25-19	DJW 3-28-19		

PROJECT NO. CUY-IR490/SR 010-2.09/19.28
SFN: 1801519 ~ REF. NO. 20
PID NO. 96833
BR. NO. CUY-010-2039
NORFOLK SOUTHERN RAILROAD OVER OH-10
CUYAHOGA COUNTY, OHIO
CONTRACTOR: KOKOSING
OWNER: OHIO DEPARTMENT OF TRANSPORTATION

Shop Paint: See Dwg. GN1 thru GN3

Edge Distance: AS NOTED | Holes: 1-1/16"Ø U.N.O.

WSLLC No.: 179-18 | Sh. 20B

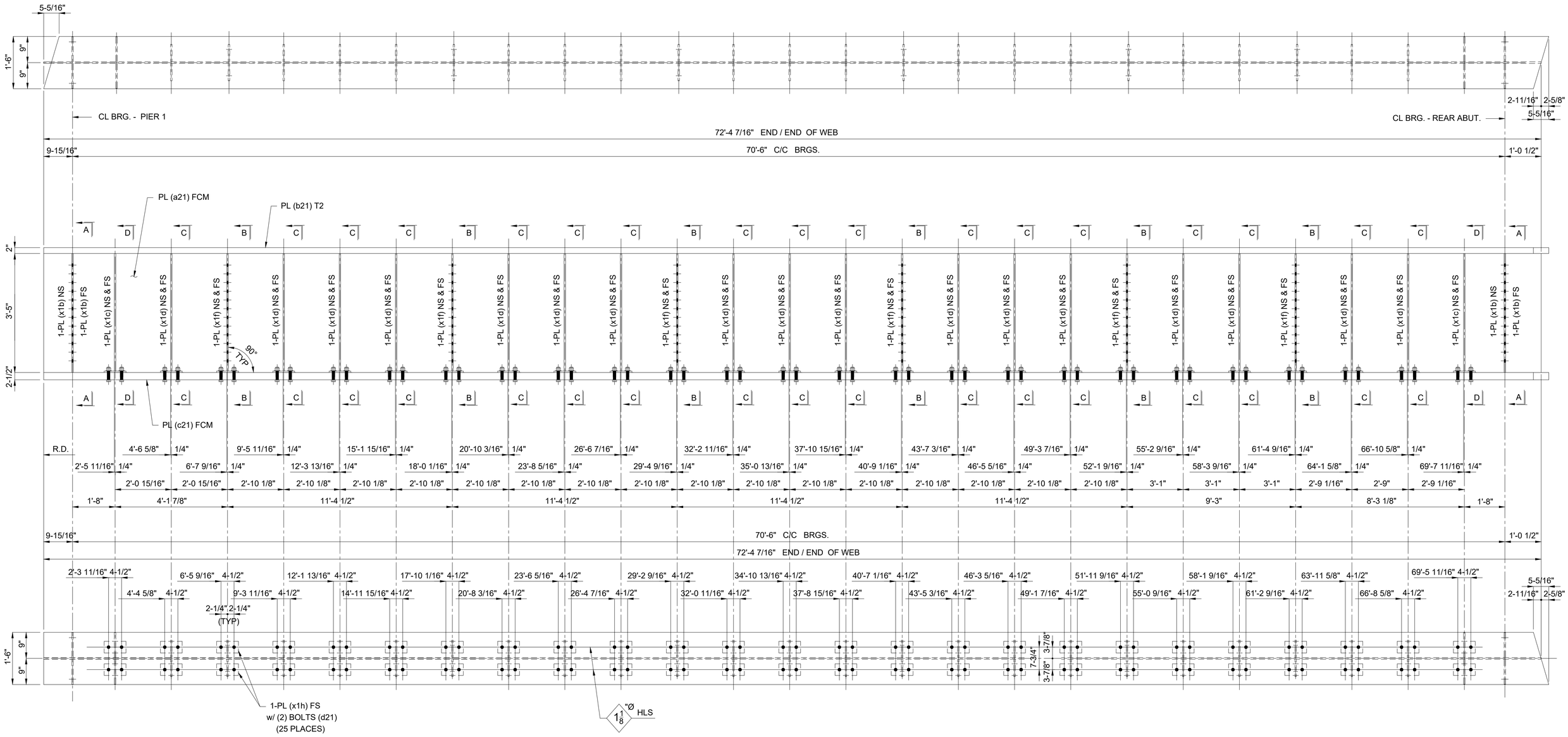

ONE - GIRDER - 21G3B

SHOP NOTES:

1) SEE SHEET X1 FOR GIRDER STANDARDS.
2) SEE SHEET C4 FOR WEB CUTTING DIAGRAM AND FLANGE ASSEMBLY DIAGRAM.
3) SEE SHEET GN1 THRU GN3 FOR GENERAL NOTES AND PAINT NOTES.
4) SEE SHEET GN2 FOR GIRDER ASSEMBLY WELD DETAILS AND WELD TERMINATION DETAILS.
5) SEE SHEET 21B FOR B.O.M.

REV / RELEASE RECORD		
0	FINAL APPROVAL / PROD.	09-20-19
C	FINAL APPROVAL	06-21-19
B	REL. FOR APPROVAL	05-23-19
A	REL. FOR INTERNAL REVIEW	04-08-19

GIRDER 21G3B

WABASH

WABASH STEEL COMPANY, LLC
2007 OLIPHANT DRIVE
VINCENNES, INDIANA 47591

Drawn	Checked	Approved	Revised
DMW 3-25-19	DJW 3-28-19		

PROJECT NO. CUY-IR490/SR 010-2.09/19.28
SFN: 1801519 ~ REF. NO. 20
PID NO. 96833
BR. NO. CUY-010-2039
NORFOLK SOUTHERN RAILROAD OVER OH-10
CUYAHOGA COUNTY, OHIO
CONTRACTOR: KOKOSING
OWNER: OHIO DEPARTMENT OF TRANSPORTATION

Shop Paint: See Dwg. GN1 thru GN3

Edge Distance: AS NOTED | Holes: 1-1/16"Ø U.N.O.

WSLLC No.: 179-18 | Sh. 21AB

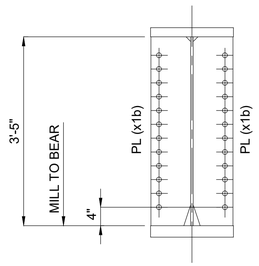

SECTION "A-A"

(2 PLACES)

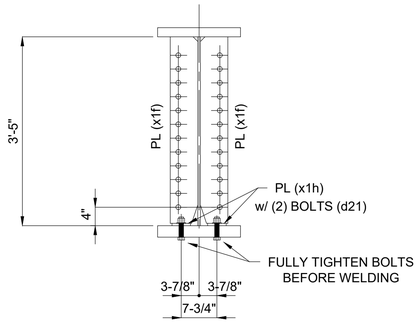

SECTION "B-B"

(6 PLACES)

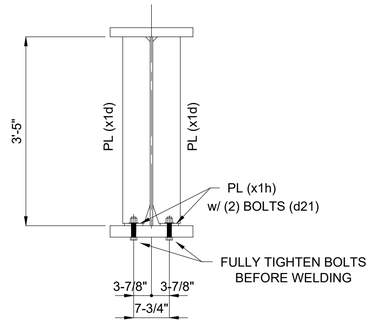

SECTION "C-C"

(17 PLACES)

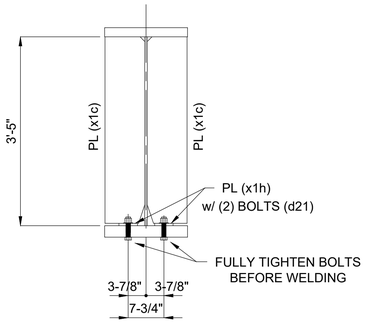

SECTION "D-D"

(2 PLACES)

BILL OF MATERIAL

Kind	Section	Length	Req.	Mark	Grade	Remarks
		GIRDERS	1	21G3B		(28 064 #)
PL	41" x 9/16"	72'-4 7/16"	1	a21	A709-50-F2	5 687
PL	18" x 2"	72'-7 1/16"	1	b21	A709-50-T2	8 885
PL	18" x 2-1/2"	72'-7 1/16"	1	c21	A709-50-F2	11 106
BOLT	1" HSBN1W	0'-4 3/4"	100	d21	F3125 HS TYPE 1 (GALV)	188
PL	8-5/8" x 1/2"	3'-5"	4	x1b	A709-50	200
PL	8-5/8" x 1/2"	3'-4 1/2"	4	x1c	A709-50	198
PL	6" x 1/2"	3'-4 1/2"	34	x1d	A709-50	1 173
PL	6" x 1/2"	3'-4 1/2"	12	x1f	A709-50	414
PL	4" x 1/2"	0'-7 1/2"	50	x1h	A709-50	213

1

ONE - GIRDER - 21G3B

SHOP NOTES:

1) SEE SHEET X1 FOR GIRDER STANDARDS.
2) SEE SHEET C4 FOR WEB CUTTING DIAGRAM AND FLANGE ASSEMBLY DIAGRAM.
3) SEE SHEET GN1 THRU GN3 FOR GENERAL NOTES AND PAINT NOTES.
4) SEE SHEET GN2 FOR GIRDER ASSEMBLY WELD DETAILS AND WELD TERMINATION DETAILS.

1	REVISIONS TO SHOP BOLTS	08-11-20

REV / RELEASE RECORD

0	FINAL APPROVAL / PROD.	09-20-19
C	FINAL APPROVAL	06-21-19
B	REL. FOR APPROVAL	05-23-19
A	REL. FOR INTERNAL REVIEW	04-08-19

GIRDER 21G3B

WABASH

WABASH STEEL COMPANY, LLC
2007 OLIPHANT DRIVE
VINCENNES, INDIANA 47591

Drawn	Checked	Approved	Revised
DMW 3-25-19	DJW 3-28-19		

PROJECT NO. CUY-IR490/SR 010-2.09/19.28
SFN: 1801519 ~ REF. NO. 20
PID NO. 96833
BR. NO. CUY-010-2039
NORFOLK SOUTHERN RAILROAD OVER OH-10
CUYAHOGA COUNTY, OHIO
CONTRACTOR: KOKOSING
OWNER: OHIO DEPARTMENT OF TRANSPORTATION

Shop Paint: See Dwg. GN1 thru GN3

Edge Distance: AS NOTED | Holes: 1-1/16"Ø U.N.O.

WSLLC No.: 179-18 | Sh. 21B

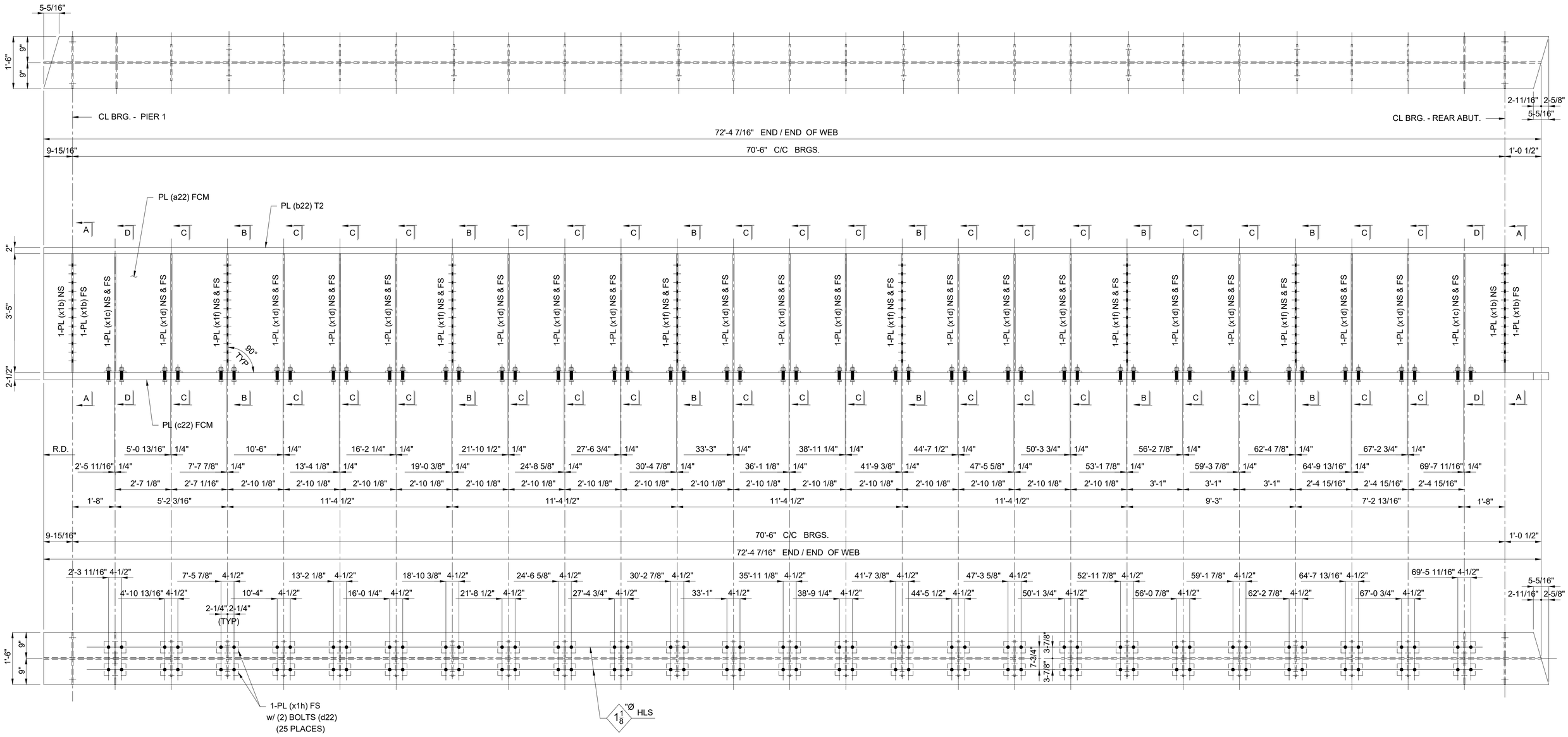

ONE - GIRDER - 22G4B

SHOP NOTES:

1) SEE SHEET X1 FOR GIRDER STANDARDS.
2) SEE SHEET C4 FOR WEB CUTTING DIAGRAM AND FLANGE ASSEMBLY DIAGRAM.
3) SEE SHEET GN1 THRU GN3 FOR GENERAL NOTES AND PAINT NOTES.
4) SEE SHEET GN2 FOR GIRDER ASSEMBLY WELD DETAILS AND WELD TERMINATION DETAILS.
5) SEE SHEET 22B FOR B.O.M.

REV / RELEASE RECORD		
0	FINAL APPROVAL / PROD.	09-20-19
C	FINAL APPROVAL	06-21-19
B	REL. FOR APPROVAL	05-23-19
A	REL. FOR INTERNAL REVIEW	04-08-19

GIRDER 22G4B

WABASH

WABASH STEEL COMPANY, LLC
2007 OLIPHANT DRIVE
VINCENNES, INDIANA 47591

Drawn	Checked	Approved	Revised
DMW 3-25-19	DJW 3-28-19		

PROJECT NO. CUY-IR490/SR 010-2.09/19.28
SFN: 1801519 ~ REF. NO. 20
PID NO. 96833
BR. NO. CUY-010-2039
NORFOLK SOUTHERN RAILROAD OVER OH-10
CUYAHOGA COUNTY, OHIO
CONTRACTOR: KOKOSING
OWNER: OHIO DEPARTMENT OF TRANSPORTATION

Shop Paint: See Dwg. GN1 thru GN3

Edge Distance: AS NOTED | Holes: 1-1/16"Ø U.N.O.

WSLLC No.: 179-18 | Sh. 22AB

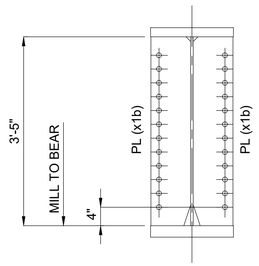

SECTION "A-A"

(2 PLACES)

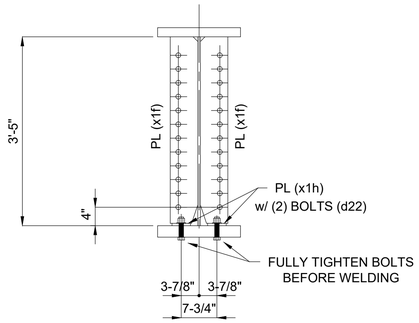

SECTION "B-B"

(6 PLACES)

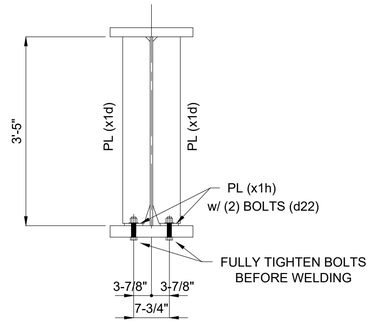

SECTION "C-C"

(17 PLACES)

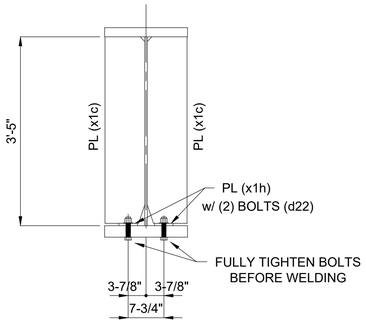

SECTION "D-D"

(2 PLACES)

BILL OF MATERIAL

Kind	Section	Length	Req.	Mark	Grade	Remarks
		GIRDERS	1	22G4B		(28 064 #)
PL	41" x 9/16"	72'-4 7/16"	1	a22	A709-50-F2	5 687
PL	18" x 2"	72'-7 1/16"	1	b22	A709-50-T2	8 885
PL	18" x 2-1/2"	72'-7 1/16"	1	c22	A709-50-F2	11 106
BOLT	1" HSBN1W	0'-4 3/4"	100	d22	F3125 HS TYPE 1 (GALV)	188
PL	8-5/8" x 1/2"	3'-5"	4	x1b	A709-50	200
PL	8-5/8" x 1/2"	3'-4 1/2"	4	x1c	A709-50	198
PL	6" x 1/2"	3'-4 1/2"	34	x1d	A709-50	1 173
PL	6" x 1/2"	3'-4 1/2"	12	x1f	A709-50	414
PL	4" x 1/2"	0'-7 1/2"	50	x1h	A709-50	213

1

ONE - GIRDER - 22G4B

SHOP NOTES:

1) SEE SHEET X1 FOR GIRDER STANDARDS.
2) SEE SHEET C4 FOR WEB CUTTING DIAGRAM AND FLANGE ASSEMBLY DIAGRAM.
3) SEE SHEET GN1 THRU GN3 FOR GENERAL NOTES AND PAINT NOTES.
4) SEE SHEET GN2 FOR GIRDER ASSEMBLY WELD DETAILS AND WELD TERMINATION DETAILS.

1	REVISIONS TO SHOP BOLTS	08-11-20

REV / RELEASE RECORD

0	FINAL APPROVAL / PROD.	09-20-19
C	FINAL APPROVAL	06-21-19
B	REL. FOR APPROVAL	05-23-19
A	REL. FOR INTERNAL REVIEW	04-08-19

GIRDER 22G4B

WABASH

WABASH STEEL COMPANY, LLC
2007 OLIPHANT DRIVE
VINCENNES, INDIANA 47591

Drawn	Checked	Approved	Revised
DMW 3-25-19	DJW 3-28-19		

PROJECT NO. CUY-IR490/SR 010-2.09/19.28
SFN: 1801519 ~ REF. NO. 20
PID NO. 96833
BR. NO. CUY-010-2039
NORFOLK SOUTHERN RAILROAD OVER OH-10
CUYAHOGA COUNTY, OHIO
CONTRACTOR: KOKOSING
OWNER: OHIO DEPARTMENT OF TRANSPORTATION

Shop Paint: See Dwg. GN1 thru GN3

Edge Distance: AS NOTED | Holes: 1-1/16"Ø U.N.O.

WSLLC No.: 179-18 | Sh. 22B

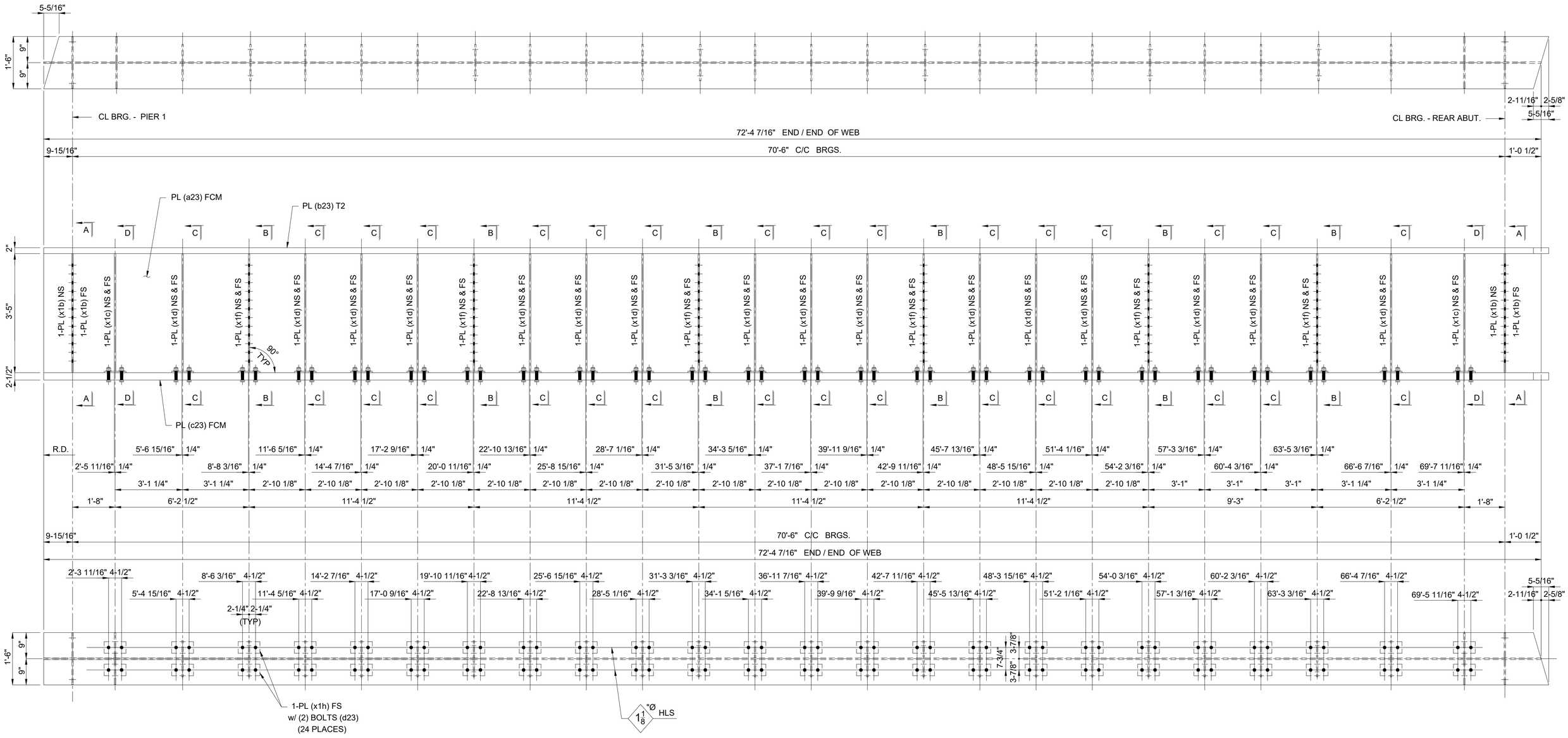

ONE - GIRDER - 23G5B

SHOP NOTES:

1) SEE SHEET X1 FOR GIRDER STANDARDS.
2) SEE SHEET C4 FOR WEB CUTTING DIAGRAM AND FLANGE ASSEMBLY DIAGRAM.
3) SEE SHEET GN1 THRU GN3 FOR GENERAL NOTES AND PAINT NOTES.
4) SEE SHEET GN2 FOR GIRDER ASSEMBLY WELD DETAILS AND WELD TERMINATION DETAILS.
5) SEE SHEET 23B FOR B.O.M.

REV / RELEASE RECORD		
0	FINAL APPROVAL / PROD.	09-20-19
C	FINAL APPROVAL	06-21-19
B	REL. FOR APPROVAL	05-23-19
A	REL. FOR INTERNAL REVIEW	04-08-19

GIRDER 23G5B

WABASH

WABASH STEEL COMPANY, LLC
2007 OLIPHANT DRIVE
VINCENNES, INDIANA 47591

Drawn	Checked	Approved	Revised
DMW 3-25-19	DJW 3-28-19		

PROJECT NO. CUY-IR490/SR 010-2.09/19.28
SFN: 1801519 ~ REF. NO. 20
PID NO. 96833
BR. NO. CUY-010-2039
NORFOLK SOUTHERN RAILROAD OVER OH-10
CUYAHOGA COUNTY, OHIO
CONTRACTOR: KOKOSING
OWNER: OHIO DEPARTMENT OF TRANSPORTATION

Shop Paint: See Dwg. GN1 thru GN3

Edge Distance: AS NOTED | Holes: 1-1/16"Ø U.N.O.

WSLLC No.: 179-18 | Sh. 23AB

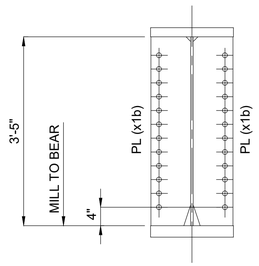

SECTION "A-A"

(2 PLACES)

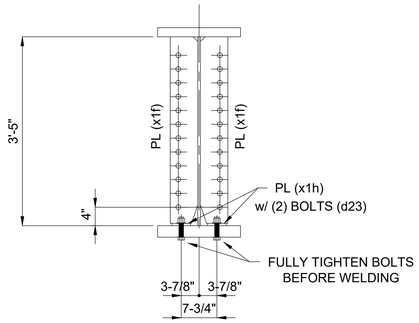

SECTION "B-B"

(6 PLACES)

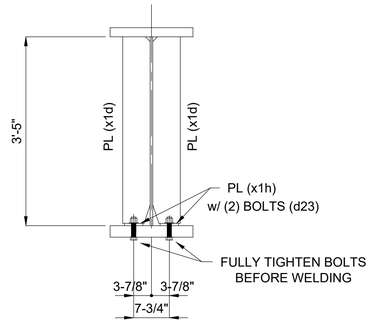

SECTION "C-C"

(16 PLACES)

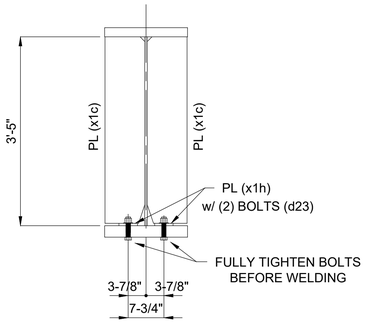

SECTION "D-D"

(2 PLACES)

BILL OF MATERIAL

Kind	Section	Length	Req.	Mark	Grade	Remarks
		GIRDERS	1	23G5B		(27 979 #)
PL	41" x 9/16"	72'-4 7/16"	1	a23	A709-50-F2	5 687
PL	18" x 2"	72'-7 1/16"	1	b23	A709-50-T2	8 885
PL	18" x 2-1/2"	72'-7 1/16"	1	c23	A709-50-F2	11 106
BOLT	1" HSBN1W	0'-4 3/4"	96	d23	F3125 HS TYPE 1 (GALV)	181
PL	8-5/8" x 1/2"	3'-5"	4	x1b	A709-50	200
PL	8-5/8" x 1/2"	3'-4 1/2"	4	x1c	A709-50	198
PL	6" x 1/2"	3'-4 1/2"	32	x1d	A709-50	1 104
PL	6" x 1/2"	3'-4 1/2"	12	x1f	A709-50	414
PL	4" x 1/2"	0'-7 1/2"	48	x1h	A709-50	204

1

ONE - GIRDER - 23G5B

SHOP NOTES:

1) SEE SHEET X1 FOR GIRDER STANDARDS.
2) SEE SHEET C4 FOR WEB CUTTING DIAGRAM AND FLANGE ASSEMBLY DIAGRAM.
3) SEE SHEET GN1 THRU GN3 FOR GENERAL NOTES AND PAINT NOTES.
4) SEE SHEET GN2 FOR GIRDER ASSEMBLY WELD DETAILS AND WELD TERMINATION DETAILS.

1	REVISIONS TO SHOP BOLTS	08-11-20

REV / RELEASE RECORD

0	FINAL APPROVAL / PROD.	09-20-19
C	FINAL APPROVAL	06-21-19
B	REL. FOR APPROVAL	05-23-19
A	REL. FOR INTERNAL REVIEW	04-08-19

GIRDER 23G5B

WABASH

WABASH STEEL COMPANY, LLC
2007 OLIPHANT DRIVE
VINCENNES, INDIANA 47591

Drawn	Checked	Approved	Revised
DMW 3-25-19	DJW 3-28-19		

PROJECT NO. CUY-IR490/SR 010-2.09/19.28
SFN: 1801519 ~ REF. NO. 20
PID NO. 96833
BR. NO. CUY-010-2039
NORFOLK SOUTHERN RAILROAD OVER OH-10
CUYAHOGA COUNTY, OHIO
CONTRACTOR: KOKOSING
OWNER: OHIO DEPARTMENT OF TRANSPORTATION

Shop Paint: See Dwg. GN1 thru GN3

Edge Distance: AS NOTED | Holes: 1-1/16"Ø U.N.O.

WSLLC No.: 179-18 | Sh. 23B

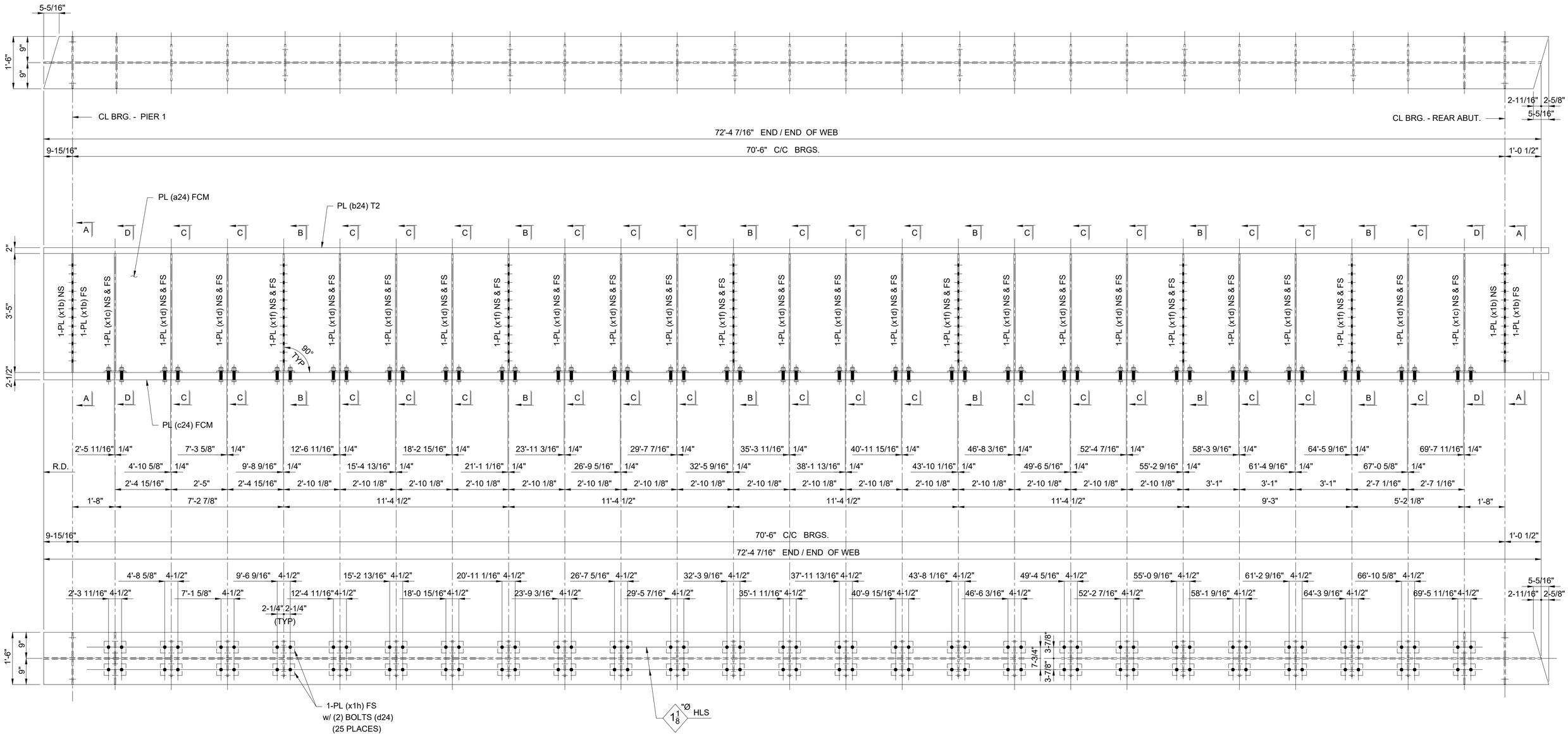

ONE - GIRDER - 24G6B

SHOP NOTES:

1) SEE SHEET X1 FOR GIRDER STANDARDS.
2) SEE SHEET C4 FOR WEB CUTTING DIAGRAM AND FLANGE ASSEMBLY DIAGRAM.
3) SEE SHEET GN1 THRU GN3 FOR GENERAL NOTES AND PAINT NOTES.
4) SEE SHEET GN2 FOR GIRDER ASSEMBLY WELD DETAILS AND WELD TERMINATION DETAILS.
5) SEE SHEET 24B FOR B.O.M.

REV / RELEASE RECORD		
0	FINAL APPROVAL / PROD.	09-20-19
C	FINAL APPROVAL	06-21-19
B	REL. FOR APPROVAL	05-23-19
A	REL. FOR INTERNAL REVIEW	04-08-19

GIRDER 24G6B

WABASH

WABASH STEEL COMPANY, LLC
2007 OLIPHANT DRIVE
VINCENNES, INDIANA 47591

Drawn	Checked	Approved	Revised
DMW 3-25-19	DJW 3-28-19		

PROJECT NO. CUY-IR490/SR 010-2.09/19.28
SFN: 1801519 ~ REF. NO. 20
PID NO. 96833
BR. NO. CUY-010-2039
NORFOLK SOUTHERN RAILROAD OVER OH-10
CUYAHOGA COUNTY, OHIO
CONTRACTOR: KOKOSING
OWNER: OHIO DEPARTMENT OF TRANSPORTATION

Shop Paint: See Dwg. GN1 thru GN3

Edge Distance: AS NOTED | Holes: 1-1/16"Ø U.N.O.

WSLLC No.: 179-18 | Sh. 24AB

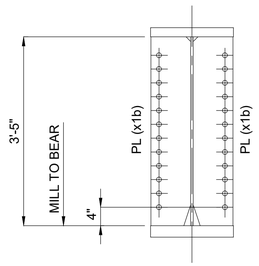

SECTION "A-A"

(2 PLACES)

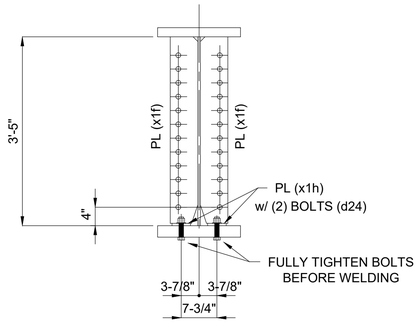

SECTION "B-B"

(6 PLACES)

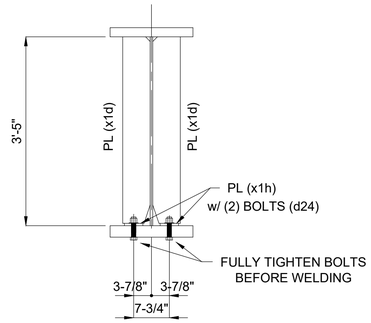

SECTION "C-C"

(17 PLACES)

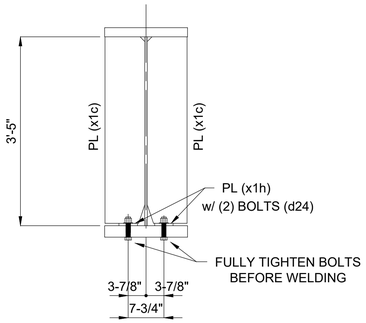

SECTION "D-D"

(2 PLACES)

BILL OF MATERIAL

Kind	Section	Length	Req.	Mark	Grade	Remarks
		GIRDERS	1	24G6B		(28 064 #)
PL	41" x 9/16"	72'-4 7/16"	1	a24	A709-50-F2	5 687
PL	18" x 2"	72'-7 1/16"	1	b24	A709-50-T2	8 885
PL	18" x 2-1/2"	72'-7 1/16"	1	c24	A709-50-F2	11 106
BOLT	1" HSBN1W	0'-4 3/4"	100	d24	F3125 HS TYPE 1 (GALV)	188
PL	8-5/8" x 1/2"	3'-5"	4	x1b	A709-50	200
PL	8-5/8" x 1/2"	3'-4 1/2"	4	x1c	A709-50	198
PL	6" x 1/2"	3'-4 1/2"	34	x1d	A709-50	1 173
PL	6" x 1/2"	3'-4 1/2"	12	x1f	A709-50	414
PL	4" x 1/2"	0'-7 1/2"	50	x1h	A709-50	213

1

ONE - GIRDER - 24G6B

SHOP NOTES:

1) SEE SHEET X1 FOR GIRDER STANDARDS.
2) SEE SHEET C4 FOR WEB CUTTING DIAGRAM AND FLANGE ASSEMBLY DIAGRAM.
3) SEE SHEET GN1 THRU GN3 FOR GENERAL NOTES AND PAINT NOTES.
4) SEE SHEET GN2 FOR GIRDER ASSEMBLY WELD DETAILS AND WELD TERMINATION DETAILS.

1	REVISIONS TO SHOP BOLTS	08-11-20

REV / RELEASE RECORD

0	FINAL APPROVAL / PROD.	09-20-19
C	FINAL APPROVAL	06-21-19
B	REL. FOR APPROVAL	05-23-19
A	REL. FOR INTERNAL REVIEW	04-08-19

GIRDER 24G6B

WABASH

WABASH STEEL COMPANY, LLC
2007 OLIPHANT DRIVE
VINCENNES, INDIANA 47591

Drawn	Checked	Approved	Revised
DMW 3-25-19	DJW 3-28-19		

PROJECT NO. CUY-IR490/SR 010-2.09/19.28
SFN: 1801519 ~ REF. NO. 20
PID NO. 96833
BR. NO. CUY-010-2039
NORFOLK SOUTHERN RAILROAD OVER OH-10
CUYAHOGA COUNTY, OHIO
CONTRACTOR: KOKOSING
OWNER: OHIO DEPARTMENT OF TRANSPORTATION

Shop Paint: See Dwg. GN1 thru GN3

Edge Distance: AS NOTED | Holes: 1-1/16"Ø U.N.O.

WSLLC No.: 179-18 | Sh. 24B

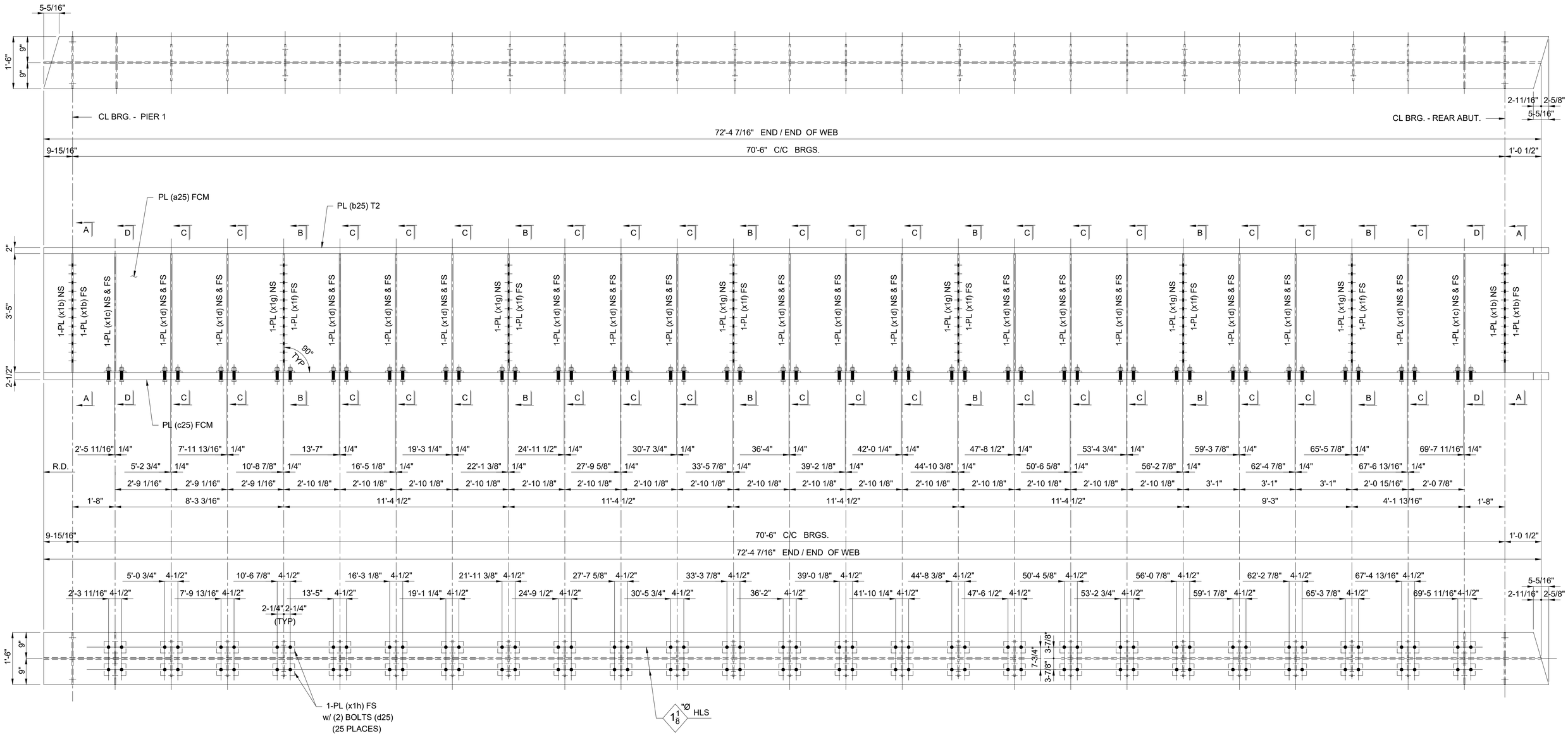

ONE - GIRDER - 25G7B

SHOP NOTES:

1) SEE SHEET X1 FOR GIRDER STANDARDS.
2) SEE SHEET C4 FOR WEB CUTTING DIAGRAM AND FLANGE ASSEMBLY DIAGRAM.
3) SEE SHEET GN1 THRU GN3 FOR GENERAL NOTES AND PAINT NOTES.
4) SEE SHEET GN2 FOR GIRDER ASSEMBLY WELD DETAILS AND WELD TERMINATION DETAILS.
5) SEE SHEET 25B FOR B.O.M.

REV / RELEASE RECORD		
0	FINAL APPROVAL / PROD.	09-20-19
C	FINAL APPROVAL	06-21-19
B	REL. FOR APPROVAL	05-23-19
A	REL. FOR INTERNAL REVIEW	04-08-19

GIRDER 25G7B

WABASH

WABASH STEEL COMPANY, LLC
2007 OLIPHANT DRIVE
VINCENNES, INDIANA 47591

Drawn	Checked	Approved	Revised
DMW 3-26-19	DJW 3-28-19		

PROJECT NO. CUY-IR490/SR 010-2.09/19.28
SFN: 1801519 ~ REF. NO. 20
PID NO. 96833
BR. NO. CUY-010-2039
NORFOLK SOUTHERN RAILROAD OVER OH-10
CUYAHOGA COUNTY, OHIO
CONTRACTOR: KOKOSING
OWNER: OHIO DEPARTMENT OF TRANSPORTATION

Shop Paint: See Dwg. GN1 thru GN3

Edge Distance: AS NOTED | Holes: 1-1/16"Ø U.N.O.

WSLLC No.: 179-18 | Sh. 25AB

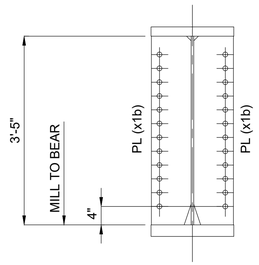

SECTION "A-A"

(2 PLACES)

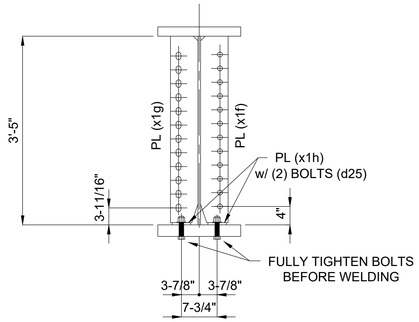

SECTION "B-B"

(6 PLACES)

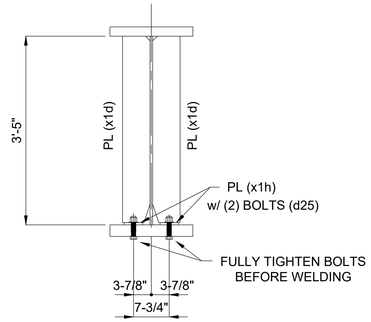

SECTION "C-C"

(17 PLACES)

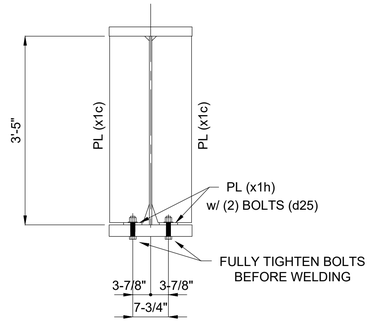

SECTION "D-D"

(2 PLACES)

BILL OF MATERIAL

Kind	Section	Length	Req.	Mark	Grade	Remarks
		GIRDERS	1	25G7B		(28 064 #)
PL	41" x 9/16"	72'-4 7/16"	1	a25	A709-50-F2	5 687
PL	18" x 2"	72'-7 1/16"	1	b25	A709-50-T2	8 885
PL	18" x 2-1/2"	72'-7 1/16"	1	c25	A709-50-F2	11 106
BOLT	1" HSBN1W	0'-4 3/4"	100	d25	F3125 HS TYPE 1 (GALV)	188
PL	8-5/8" x 1/2"	3'-5"	4	x1b	A709-50	200
PL	8-5/8" x 1/2"	3'-4 1/2"	4	x1c	A709-50	198
PL	6" x 1/2"	3'-4 1/2"	34	x1d	A709-50	1 173
PL	6" x 1/2"	3'-4 1/2"	6	x1f	A709-50	207
PL	6" x 1/2"	3'-4 1/2"	6	x1g	A709-50	207
PL	4" x 1/2"	0'-7 1/2"	50	x1h	A709-50	213

1

ONE - GIRDER - 25G7B

SHOP NOTES:

1) SEE SHEET X1 FOR GIRDER STANDARDS.
2) SEE SHEET C4 FOR WEB CUTTING DIAGRAM AND FLANGE ASSEMBLY DIAGRAM.
3) SEE SHEET GN1 THRU GN3 FOR GENERAL NOTES AND PAINT NOTES.
4) SEE SHEET GN2 FOR GIRDER ASSEMBLY WELD DETAILS AND WELD TERMINATION DETAILS.

1	REVISIONS TO SHOP BOLTS	08-11-20

REV / RELEASE RECORD

0	FINAL APPROVAL / PROD.	09-20-19
C	FINAL APPROVAL	06-21-19
B	REL. FOR APPROVAL	05-23-19
A	REL. FOR INTERNAL REVIEW	04-08-19

GIRDER 25G7B

WABASH

WABASH STEEL COMPANY, LLC
2007 OLIPHANT DRIVE
VINCENNES, INDIANA 47591

Drawn	Checked	Approved	Revised
DMW 3-26-19	DJW 3-28-19		

PROJECT NO. CUY-IR490/SR 010-2.09/19.28
SFN: 1801519 ~ REF. NO. 20
PID NO. 96833
BR. NO. CUY-010-2039
NORFOLK SOUTHERN RAILROAD OVER OH-10
CUYAHOGA COUNTY, OHIO
CONTRACTOR: KOKOSING
OWNER: OHIO DEPARTMENT OF TRANSPORTATION

Shop Paint: See Dwg. GN1 thru GN3

Edge Distance: AS NOTED | Holes: 1-1/16"Ø U.N.O.

WSLLC No.: 179-18 | Sh. 25B

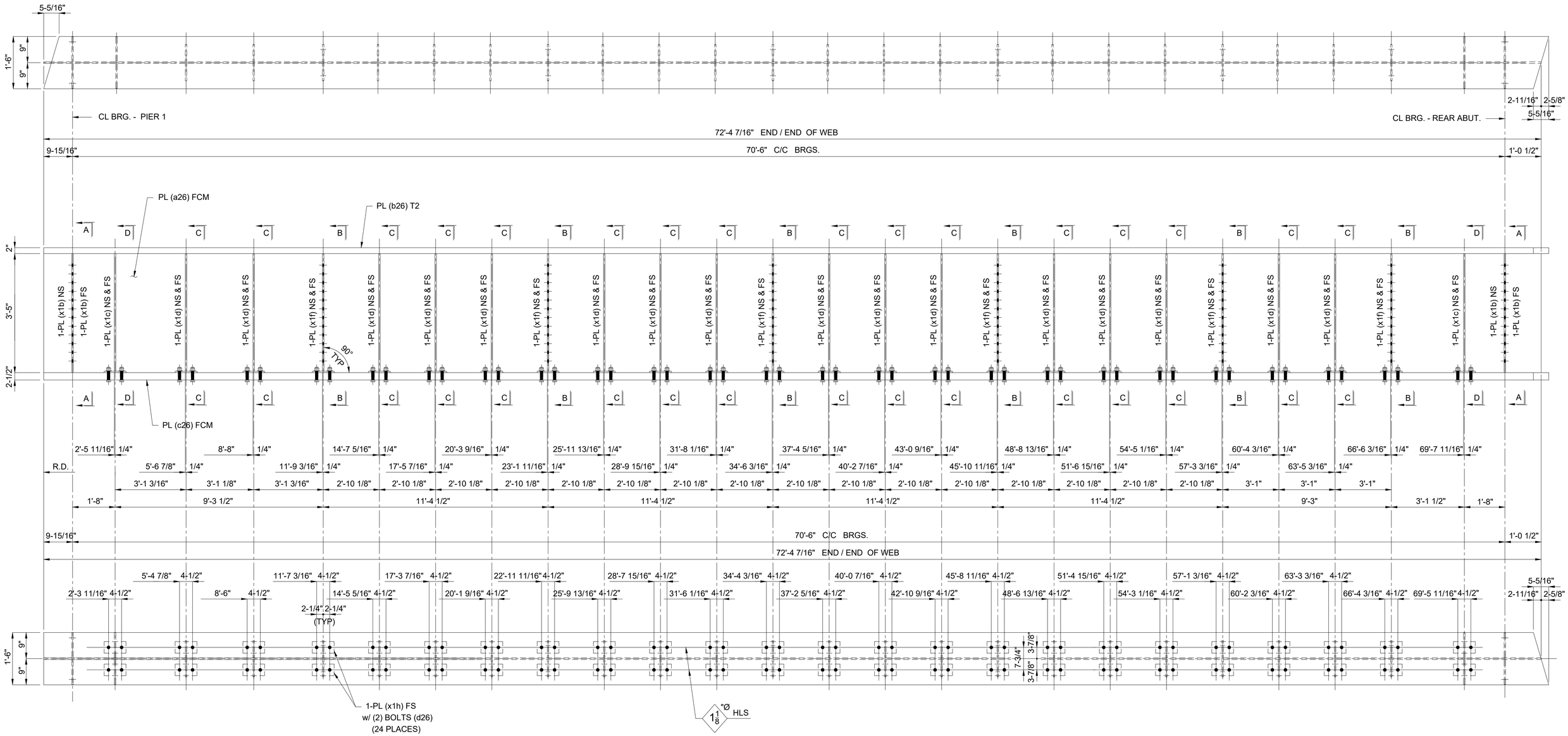

ONE - GIRDER - 26G8B

SHOP NOTES:

1) SEE SHEET X1 FOR GIRDER STANDARDS.
2) SEE SHEET C4 FOR WEB CUTTING DIAGRAM AND FLANGE ASSEMBLY DIAGRAM.
3) SEE SHEET GN1 THRU GN3 FOR GENERAL NOTES AND PAINT NOTES.
4) SEE SHEET GN2 FOR GIRDER ASSEMBLY WELD DETAILS AND WELD TERMINATION DETAILS.
5) SEE SHEET 26B FOR B.O.M.

REV / RELEASE RECORD		
0	FINAL APPROVAL / PROD.	09-20-19
C	FINAL APPROVAL	06-21-19
B	REL. FOR APPROVAL	05-23-19
A	REL. FOR INTERNAL REVIEW	04-08-19

GIRDER 26G8B

WABASH

WABASH STEEL COMPANY, LLC
2007 OLIPHANT DRIVE
VINCENNES, INDIANA 47591

Drawn	Checked	Approved	Revised
DMW 3-26-19	DJW 3-28-19		

PROJECT NO. CUY-IR490/SR 010-2.09/19.28
SFN: 1801519 ~ REF. NO. 20
PID NO. 96833
BR. NO. CUY-010-2039
NORFOLK SOUTHERN RAILROAD OVER OH-10
CUYAHOGA COUNTY, OHIO
CONTRACTOR: KOKOSING
OWNER: OHIO DEPARTMENT OF TRANSPORTATION

Shop Paint: See Dwg. GN1 thru GN3

Edge Distance: AS NOTED | Holes: 1-1/16"Ø U.N.O.

WSLLC No.: 179-18 | Sh. 26AB

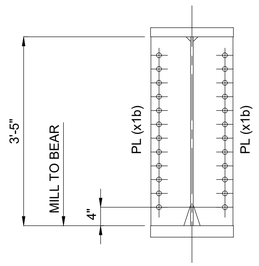

SECTION "A-A"

(2 PLACES)

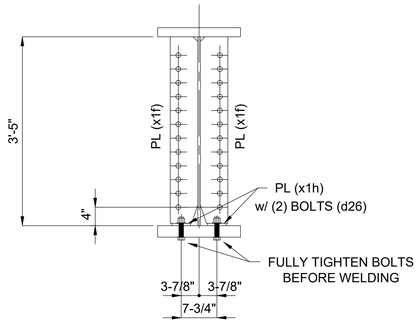

SECTION "B-B"

(6 PLACES)

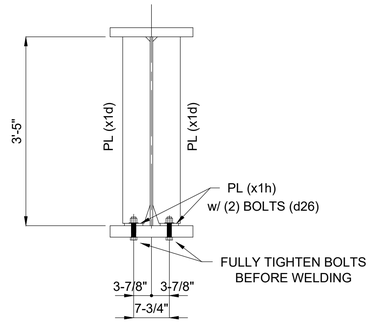

SECTION "C-C"

(16 PLACES)

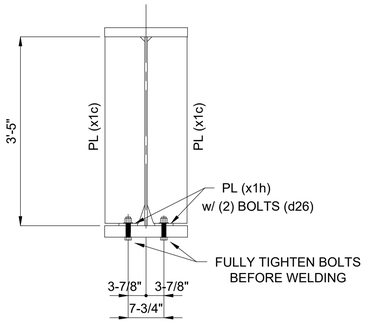

SECTION "D-D"

(2 PLACES)

BILL OF MATERIAL

Kind	Section	Length	Req.	Mark	Grade	Remarks
		GIRDERS	1	26G8B		(27 979 #)
PL	41" x 9/16"	72'-4 7/16"	1	a26	A709-50-F2	5 687
PL	18" x 2"	72'-7 1/16"	1	b26	A709-50-T2	8 885
PL	18" x 2-1/2"	72'-7 1/16"	1	c26	A709-50-F2	11 106
BOLT	1" HSBN1W	0'-4 3/4"	96	d26	F3125 HS TYPE 1 (GALV)	181
PL	8-5/8" x 1/2"	3'-5"	4	x1b	A709-50	200
PL	8-5/8" x 1/2"	3'-4 1/2"	4	x1c	A709-50	198
PL	6" x 1/2"	3'-4 1/2"	32	x1d	A709-50	1 104
PL	6" x 1/2"	3'-4 1/2"	12	x1f	A709-50	414
PL	4" x 1/2"	0'-7 1/2"	48	x1h	A709-50	204

1

ONE - GIRDER - 26G8B

SHOP NOTES:

1) SEE SHEET X1 FOR GIRDER STANDARDS.
2) SEE SHEET C4 FOR WEB CUTTING DIAGRAM AND FLANGE ASSEMBLY DIAGRAM.
3) SEE SHEET GN1 THRU GN3 FOR GENERAL NOTES AND PAINT NOTES.
4) SEE SHEET GN2 FOR GIRDER ASSEMBLY WELD DETAILS AND WELD TERMINATION DETAILS.

1	REVISIONS TO SHOP BOLTS	08-11-20

REV / RELEASE RECORD

0	FINAL APPROVAL / PROD.	09-20-19
C	FINAL APPROVAL	06-21-19
B	REL. FOR APPROVAL	05-23-19
A	REL. FOR INTERNAL REVIEW	04-08-19

GIRDER 26G8B

WABASH

WABASH STEEL COMPANY, LLC
2007 OLIPHANT DRIVE
VINCENNES, INDIANA 47591

Drawn	Checked	Approved	Revised
DMW 3-26-19	DJW 3-28-19		

PROJECT NO. CUY-IR490/SR 010-2.09/19.28
SFN: 1801519 ~ REF. NO. 20
PID NO. 96833
BR. NO. CUY-010-2039
NORFOLK SOUTHERN RAILROAD OVER OH-10
CUYAHOGA COUNTY, OHIO
CONTRACTOR: KOKOSING
OWNER: OHIO DEPARTMENT OF TRANSPORTATION

Shop Paint: See Dwg. GN1 thru GN3

Edge Distance: AS NOTED | Holes: 1-1/16"Ø U.N.O.

WSLLC No.: 179-18 | Sh. 26B

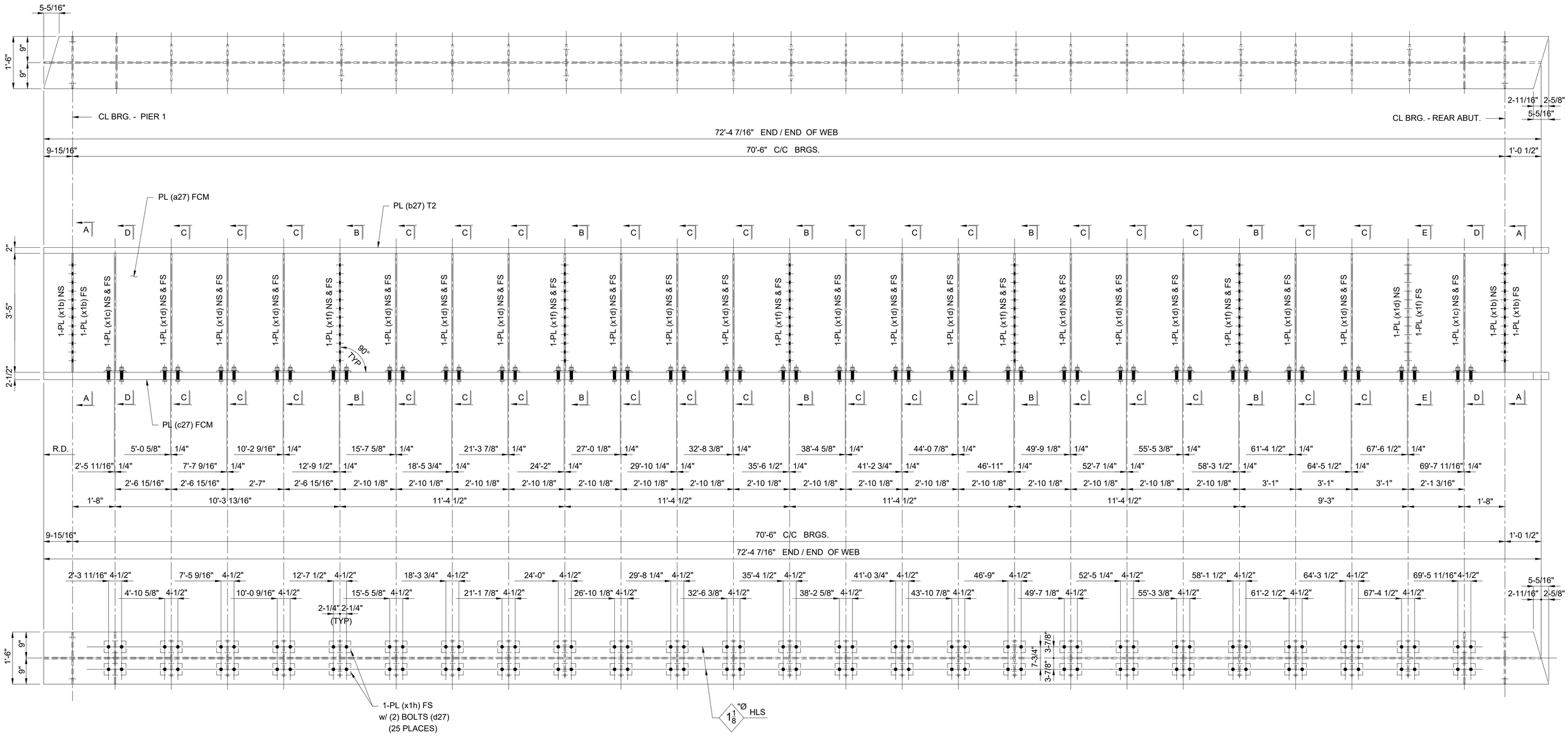

ONE - GIRDER - 27G9B

SHOP NOTES:

1) SEE SHEET X1 FOR GIRDER STANDARDS.
2) SEE SHEET C4 FOR WEB CUTTING DIAGRAM AND FLANGE ASSEMBLY DIAGRAM.
3) SEE SHEET GN1 THRU GN3 FOR GENERAL NOTES AND PAINT NOTES.
4) SEE SHEET GN2 FOR GIRDER ASSEMBLY WELD DETAILS AND WELD TERMINATION DETAILS.
5) SEE SHEET 27B FOR B.O.M.

REV / RELEASE RECORD

0	FINAL APPROVAL / PROD.	09-20-19
C	FINAL APPROVAL	06-21-19
B	REL. FOR APPROVAL	05-23-19
A	REL. FOR INTERNAL REVIEW	04-08-19

GIRDER 27G9B

WABASH

WABASH STEEL COMPANY, LLC
2007 OLIPHANT DRIVE
VINCENNES, INDIANA 47591

Drawn	Checked	Approved	Revised
DMW 3-26-19	DJW 3-28-19		

PROJECT NO. CUY-IR490/SR 010-2.09/19.28
SFN: 1801519 ~ REF. NO. 20
PID NO. 96833
BR. NO. CUY-010-2039
NORFOLK SOUTHERN RAILROAD OVER OH-10
CUYAHOGA COUNTY, OHIO
CONTRACTOR: KOKOSING
OWNER: OHIO DEPARTMENT OF TRANSPORTATION

Shop Paint: See Dwg. GN1 thru GN3

Edge Distance: AS NOTED | Holes: 1-1/16"Ø U.N.O.

WSLLC No.: 179-18 | Sh. 27AB

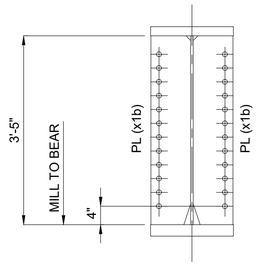

SECTION "A-A"

(2 PLACES)

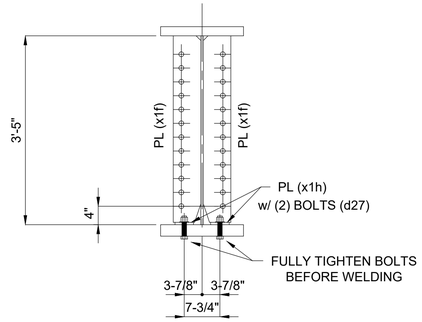

SECTION "B-B"

(5 PLACES)

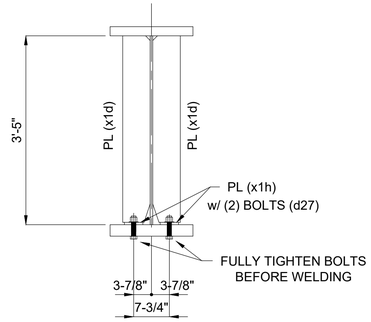

SECTION "C-C"

(17 PLACES)

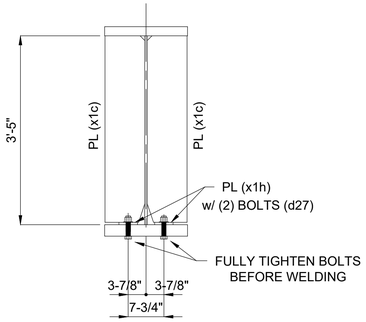

SECTION "D-D"

(2 PLACES)

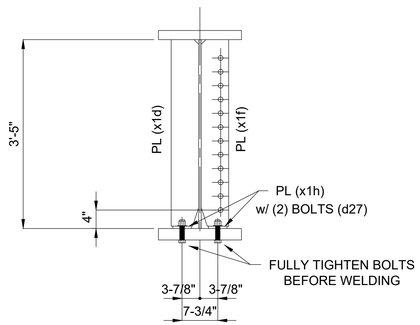

SECTION "E-E"

(ONE PLACE)

BILL OF MATERIAL

Kind	Section	Length	Req.	Mark	Grade	Remarks
		GIRDERS	1	27G9B		(28 064 #)
PL	41" x 9/16"	72'-4 7/16"	1	a27	A709-50-F2	5 687
PL	18" x 2"	72'-7 1/16"	1	b27	A709-50-T2	8 885
PL	18" x 2-1/2"	72'-7 1/16"	1	c27	A709-50-F2	11 106
BOLT	1" HSBN1W	0'-4 3/4"	100	d27	F3125 HS TYPE 1 (GALV)	188
PL	8-5/8" x 1/2"	3'-5"	4	x1b	A709-50	200
PL	8-5/8" x 1/2"	3'-4 1/2"	4	x1c	A709-50	198
PL	6" x 1/2"	3'-4 1/2"	35	x1d	A709-50	1 208
PL	6" x 1/2"	3'-4 1/2"	11	x1f	A709-50	379
PL	4" x 1/2"	0'-7 1/2"	50	x1h	A709-50	213

1

ONE - GIRDER - 27G9B

SHOP NOTES:

1) SEE SHEET X1 FOR GIRDER STANDARDS.
2) SEE SHEET C4 FOR WEB CUTTING DIAGRAM AND FLANGE ASSEMBLY DIAGRAM.
3) SEE SHEET GN1 THRU GN3 FOR GENERAL NOTES AND PAINT NOTES.
4) SEE SHEET GN2 FOR GIRDER ASSEMBLY WELD DETAILS AND WELD TERMINATION DETAILS.

1	REVISIONS TO SHOP BOLTS	08-11-20

REV / RELEASE RECORD

0	FINAL APPROVAL / PROD.	09-20-19
C	FINAL APPROVAL	06-21-19
B	REL. FOR APPROVAL	05-23-19
A	REL. FOR INTERNAL REVIEW	04-08-19

GIRDER 27G9B

WABASH

WABASH STEEL COMPANY, LLC
2007 OLIPHANT DRIVE
VINCENNES, INDIANA 47591

Drawn	Checked	Approved	Revised
DMW 3-26-19	DJW 3-28-19		

PROJECT NO. CUY-IR490/SR 010-2.09/19.28
SFN: 1801519 ~ REF. NO. 20
PID NO. 96833
BR. NO. CUY-010-2039
NORFOLK SOUTHERN RAILROAD OVER OH-10
CUYAHOGA COUNTY, OHIO
CONTRACTOR: KOKOSING
OWNER: OHIO DEPARTMENT OF TRANSPORTATION

Shop Paint: See Dwg. GN1 thru GN3

Edge Distance: AS NOTED | Holes: 1-1/16"Ø U.N.O.

WSLLC No.: 179-18 | Sh. 27B

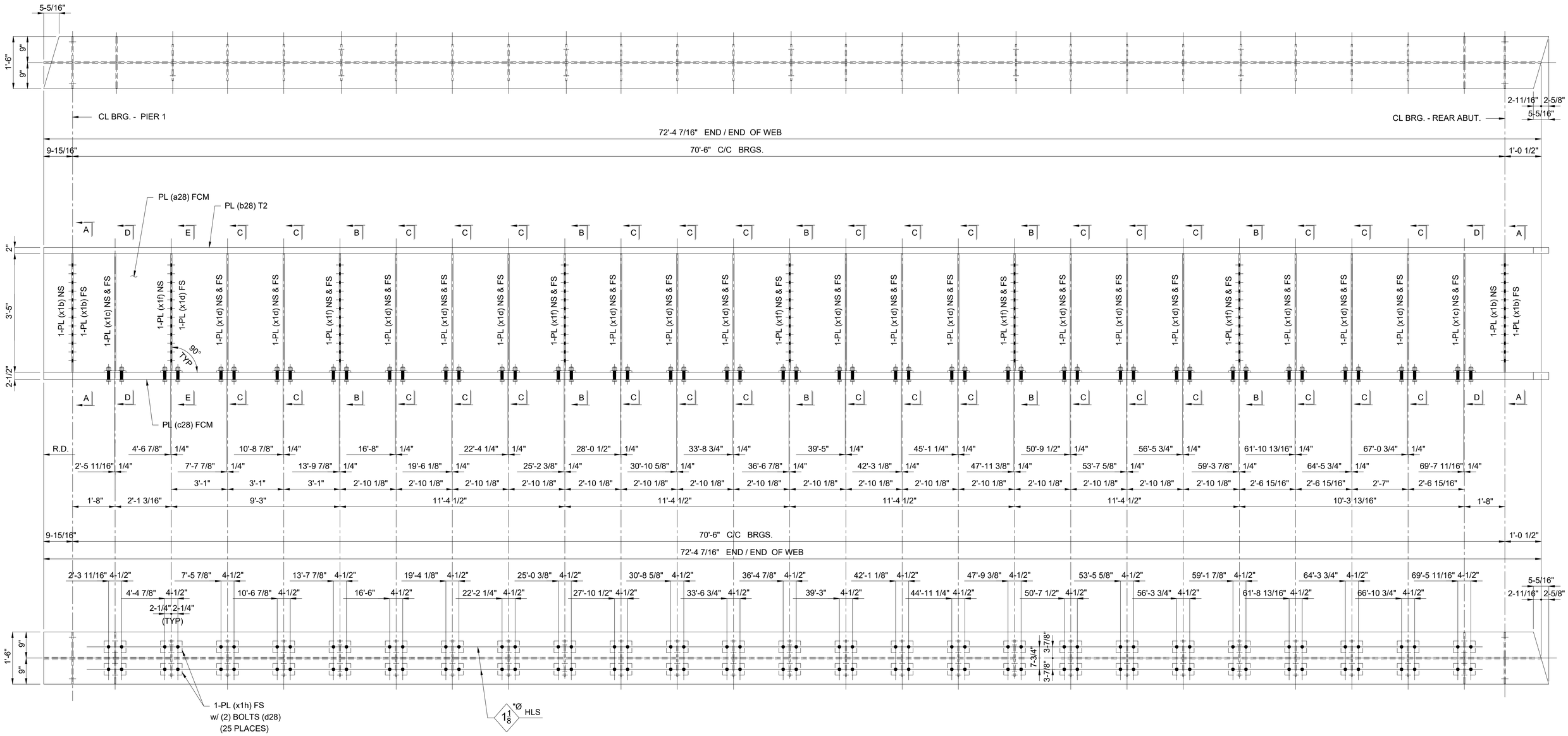

ONE - GIRDER - 28G10B

SHOP NOTES:

1) SEE SHEET X1 FOR GIRDER STANDARDS.
2) SEE SHEET C4 FOR WEB CUTTING DIAGRAM AND FLANGE ASSEMBLY DIAGRAM.
3) SEE SHEET GN1 THRU GN3 FOR GENERAL NOTES AND PAINT NOTES.
4) SEE SHEET GN2 FOR GIRDER ASSEMBLY WELD DETAILS AND WELD TERMINATION DETAILS.
5) SEE SHEET 28B FOR B.O.M.

REV / RELEASE RECORD		
0	FINAL APPROVAL / PROD.	09-20-19
C	FINAL APPROVAL	06-21-19
B	REL. FOR APPROVAL	05-23-19
A	REL. FOR INTERNAL REVIEW	04-08-19

GIRDER 28G10B

WABASH

WABASH STEEL COMPANY, LLC
2007 OLIPHANT DRIVE
VINCENNES, INDIANA 47591

Drawn	Checked	Approved	Revised
DMW 3-26-19	DJW 3-29-19		

PROJECT NO. CUY-IR490/SR 010-2.09/19.28
SFN: 1801519 ~ REF. NO. 20
PID NO. 96833
BR. NO. CUY-010-2039
NORFOLK SOUTHERN RAILROAD OVER OH-10
CUYAHOGA COUNTY, OHIO
CONTRACTOR: KOKOSING
OWNER: OHIO DEPARTMENT OF TRANSPORTATION

Shop Paint: See Dwg. GN1 thru GN3

Edge Distance: AS NOTED | Holes: 1-1/16"Ø U.N.O.

WSLLC No.: 179-18 | Sh. 28AB

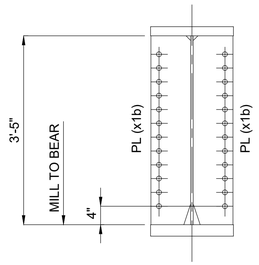

SECTION "A-A"

(2 PLACES)

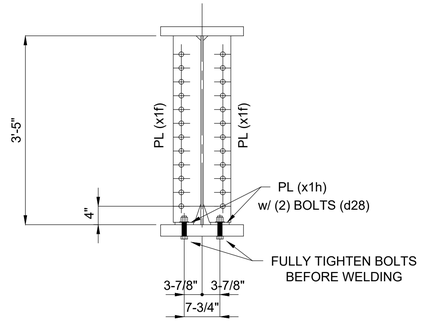

SECTION "B-B"

(5 PLACES)

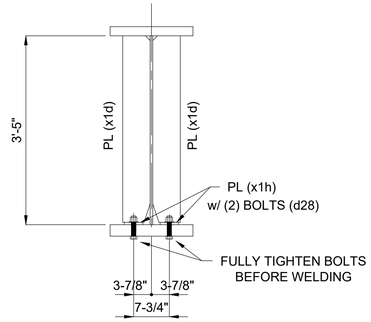

SECTION "C-C"

(17 PLACES)

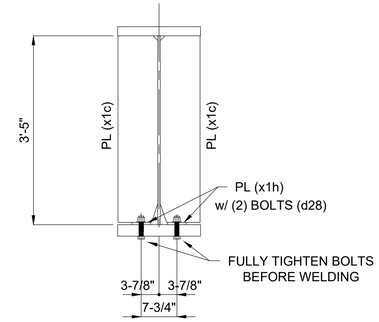

SECTION "D-D"

(2 PLACES)

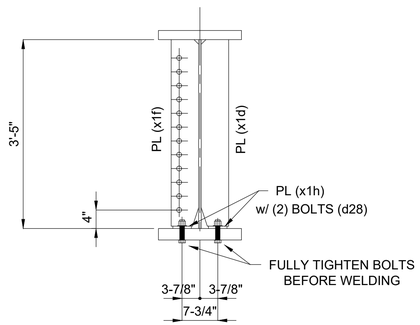

SECTION "E-E"

(ONE PLACE)

BILL OF MATERIAL

Kind	Section	Length	Req.	Mark	Grade	Remarks
		GIRDERS	1	28G10B		(28 064 #)
PL	41" x 9/16"	72'-4 7/16"	1	a28	A709-50-F2	5 687
PL	18" x 2"	72'-7 1/16"	1	b28	A709-50-T2	8 885
PL	18" x 2-1/2"	72'-7 1/16"	1	c28	A709-50-F2	11 106
BOLT	1" HSBN1W	0'-4 3/4"	100	d28	F3125 HS TYPE 1 (GALV)	188
PL	8-5/8" x 1/2"	3'-5"	4	x1b	A709-50	200
PL	8-5/8" x 1/2"	3'-4 1/2"	4	x1c	A709-50	198
PL	6" x 1/2"	3'-4 1/2"	35	x1d	A709-50	1 208
PL	6" x 1/2"	3'-4 1/2"	11	x1f	A709-50	379
PL	4" x 1/2"	0'-7 1/2"	50	x1h	A709-50	213

1

ONE - GIRDER - 28G10B

SHOP NOTES:

1) SEE SHEET X1 FOR GIRDER STANDARDS.
2) SEE SHEET C4 FOR WEB CUTTING DIAGRAM AND FLANGE ASSEMBLY DIAGRAM.
3) SEE SHEET GN1 THRU GN3 FOR GENERAL NOTES AND PAINT NOTES.
4) SEE SHEET GN2 FOR GIRDER ASSEMBLY WELD DETAILS AND WELD TERMINATION DETAILS.

1	REVISIONS TO SHOP BOLTS	08-11-20

REV / RELEASE RECORD

0	FINAL APPROVAL / PROD.	09-20-19
C	FINAL APPROVAL	06-21-19
B	REL. FOR APPROVAL	05-23-19
A	REL. FOR INTERNAL REVIEW	04-08-19

GIRDER 28G10B

WABASH

WABASH STEEL COMPANY, LLC
2007 OLIPHANT DRIVE
VINCENNES, INDIANA 47591

Drawn	Checked	Approved	Revised
DMW 3-26-19	DJW 3-29-19		

PROJECT NO. CUY-IR490/SR 010-2.09/19.28
SFN: 1801519 ~ REF. NO. 20
PID NO. 96833
BR. NO. CUY-010-2039
NORFOLK SOUTHERN RAILROAD OVER OH-10
CUYAHOGA COUNTY, OHIO
CONTRACTOR: KOKOSING
OWNER: OHIO DEPARTMENT OF TRANSPORTATION

Shop Paint: See Dwg. GN1 thru GN3

Edge Distance: AS NOTED | Holes: 1-1/16"Ø U.N.O.

WSLLC No.: 179-18 | Sh. 28B

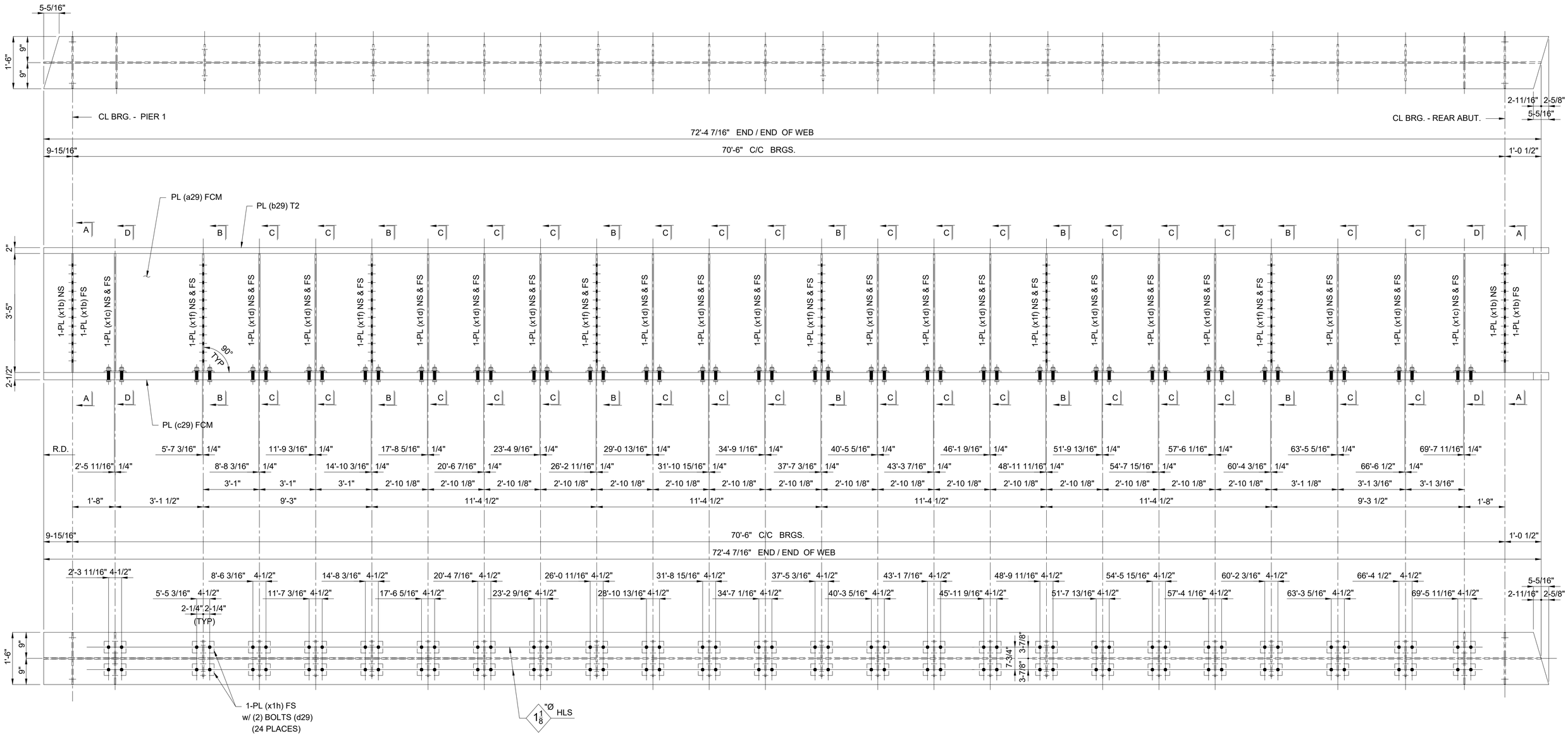

ONE - GIRDER - 29G11B

SHOP NOTES:

1) SEE SHEET X1 FOR GIRDER STANDARDS.
2) SEE SHEET C4 FOR WEB CUTTING DIAGRAM AND FLANGE ASSEMBLY DIAGRAM.
3) SEE SHEET GN1 THRU GN3 FOR GENERAL NOTES AND PAINT NOTES.
4) SEE SHEET GN2 FOR GIRDER ASSEMBLY WELD DETAILS AND WELD TERMINATION DETAILS.
5) SEE SHEET 29B FOR B.O.M.

REV / RELEASE RECORD		
0	FINAL APPROVAL / PROD.	09-20-19
C	FINAL APPROVAL	06-21-19
B	REL. FOR APPROVAL	05-23-19
A	REL. FOR INTERNAL REVIEW	04-08-19

GIRDER 29G11B

WABASH

WABASH STEEL COMPANY, LLC
2007 OLIPHANT DRIVE
VINCENNES, INDIANA 47591

Drawn	Checked	Approved	Revised
DMW 3-26-19	DJW 3-29-19		

PROJECT NO. CUY-IR490/SR 010-2.09/19.28
SFN: 1801519 ~ REF. NO. 20
PID NO. 96833
BR. NO. CUY-010-2039
NORFOLK SOUTHERN RAILROAD OVER OH-10
CUYAHOGA COUNTY, OHIO
CONTRACTOR: KOKOSING
OWNER: OHIO DEPARTMENT OF TRANSPORTATION

Shop Paint: See Dwg. GN1 thru GN3

Edge Distance: AS NOTED | Holes: 1-1/16"Ø U.N.O.

WSLLC No.: 179-18 | Sh. 29AB

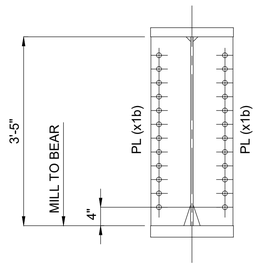

SECTION "A-A"

(2 PLACES)

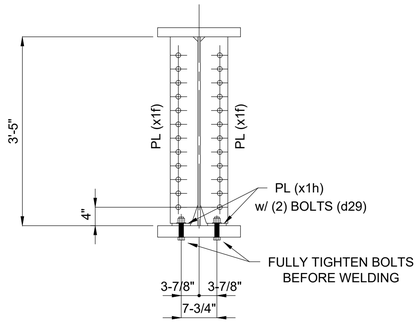

SECTION "B-B"

(6 PLACES)

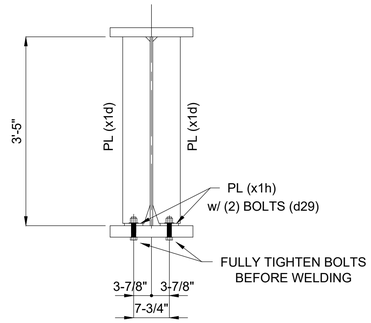

SECTION "C-C"

(16 PLACES)

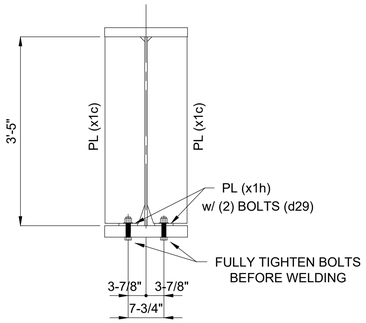

SECTION "D-D"

(2 PLACES)

BILL OF MATERIAL

Kind	Section	Length	Req.	Mark	Grade	Remarks
		GIRDERS	1	29G11B		(27 979 #)
PL	41" x 9/16"	72'-4 7/16"	1	a29	A709-50-F2	5 687
PL	18" x 2"	72'-7 1/16"	1	b29	A709-50-T2	8 885
PL	18" x 2-1/2"	72'-7 1/16"	1	c29	A709-50-F2	11 106
BOLT	1" HSBN1W	0'-4 3/4"	96	d29	F3125 HS TYPE 1 (GALV)	181
PL	8-5/8" x 1/2"	3'-5"	4	x1b	A709-50	200
PL	8-5/8" x 1/2"	3'-4 1/2"	4	x1c	A709-50	198
PL	6" x 1/2"	3'-4 1/2"	32	x1d	A709-50	1 104
PL	6" x 1/2"	3'-4 1/2"	12	x1f	A709-50	414
PL	4" x 1/2"	0'-7 1/2"	48	x1h	A709-50	204

1

ONE - GIRDER - 29G11B

SHOP NOTES:

1) SEE SHEET X1 FOR GIRDER STANDARDS.
2) SEE SHEET C4 FOR WEB CUTTING DIAGRAM AND FLANGE ASSEMBLY DIAGRAM.
3) SEE SHEET GN1 THRU GN3 FOR GENERAL NOTES AND PAINT NOTES.
4) SEE SHEET GN2 FOR GIRDER ASSEMBLY WELD DETAILS AND WELD TERMINATION DETAILS.

1	REVISIONS TO SHOP BOLTS	08-11-20

REV / RELEASE RECORD

0	FINAL APPROVAL / PROD.	09-20-19
C	FINAL APPROVAL	06-21-19
B	REL. FOR APPROVAL	05-23-19
A	REL. FOR INTERNAL REVIEW	04-08-19

GIRDER 29G11B

WABASH

WABASH STEEL COMPANY, LLC
2007 OLIPHANT DRIVE
VINCENNES, INDIANA 47591

Drawn	Checked	Approved	Revised
DMW 3-26-19	DJW 3-29-19		

PROJECT NO. CUY-IR490/SR 010-2.09/19.28
SFN: 1801519 ~ REF. NO. 20
PID NO. 96833
BR. NO. CUY-010-2039
NORFOLK SOUTHERN RAILROAD OVER OH-10
CUYAHOGA COUNTY, OHIO
CONTRACTOR: KOKOSING
OWNER: OHIO DEPARTMENT OF TRANSPORTATION

Shop Paint: See Dwg. GN1 thru GN3

Edge Distance: AS NOTED | Holes: 1-1/16"Ø U.N.O.

WSLLC No.: 179-18 | Sh. 29B

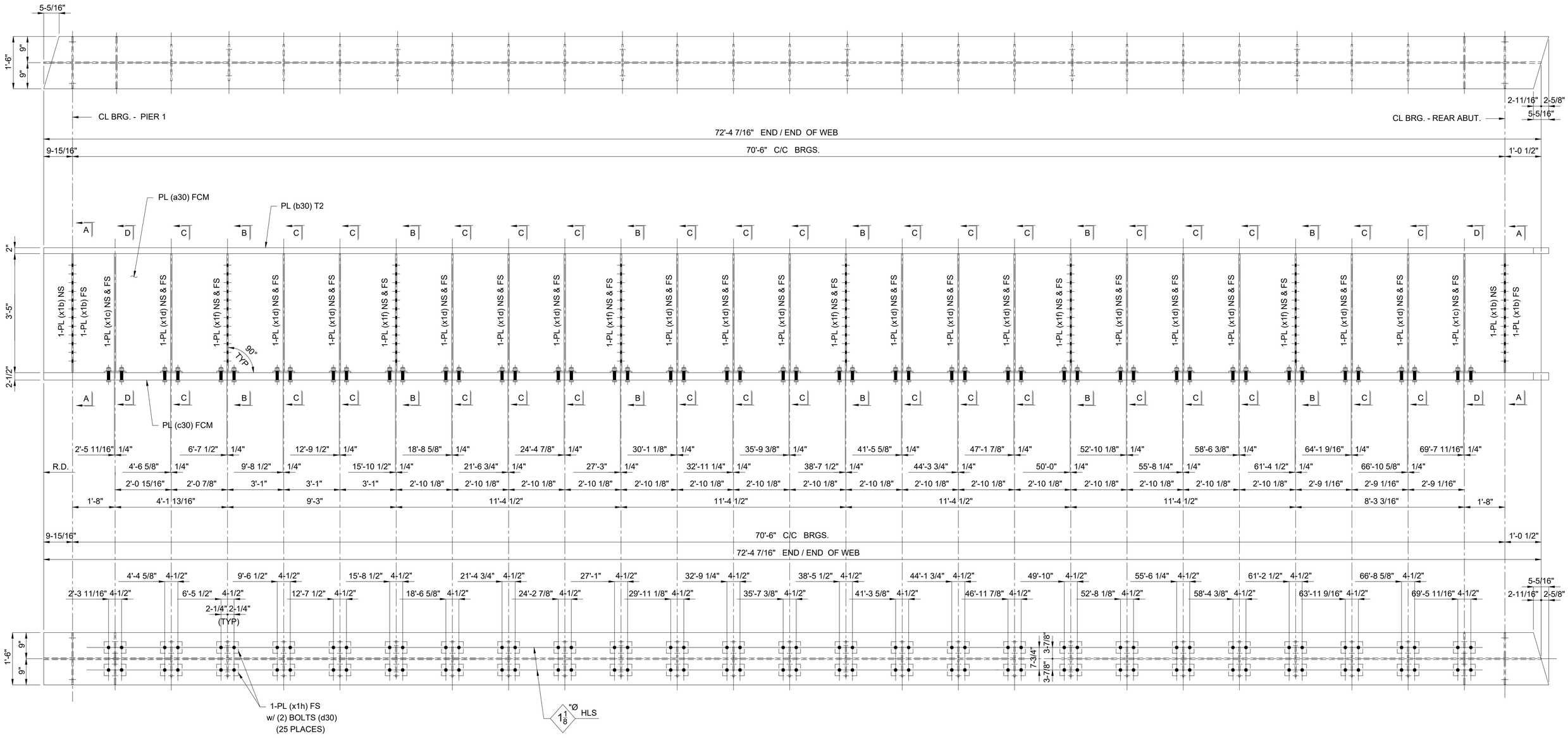

ONE - GIRDER - 30G12B

SHOP NOTES:

1) SEE SHEET X1 FOR GIRDER STANDARDS.
2) SEE SHEET C4 FOR WEB CUTTING DIAGRAM AND FLANGE ASSEMBLY DIAGRAM.
3) SEE SHEET GN1 THRU GN3 FOR GENERAL NOTES AND PAINT NOTES.
4) SEE SHEET GN2 FOR GIRDER ASSEMBLY WELD DETAILS AND WELD TERMINATION DETAILS.
5) SEE SHEET 30B FOR B.O.M.

REV / RELEASE RECORD

0	FINAL APPROVAL / PROD.	09-20-19
C	FINAL APPROVAL	06-21-19
B	REL. FOR APPROVAL	05-23-19
A	REL. FOR INTERNAL REVIEW	04-08-19

GIRDER 30G12B

WABASH

WABASH STEEL COMPANY, LLC
2007 OLIPHANT DRIVE
VINCENNES, INDIANA 47591

Drawn	Checked	Approved	Revised
DMW 3-26-19	DJW 3-29-19		

PROJECT NO. CUY-IR490/SR 010-2.09/19.28
SFN: 1801519 ~ REF. NO. 20
PID NO. 96833
BR. NO. CUY-010-2039
NORFOLK SOUTHERN RAILROAD OVER OH-10
CUYAHOGA COUNTY, OHIO
CONTRACTOR: KOKOSING
OWNER: OHIO DEPARTMENT OF TRANSPORTATION

Shop Paint: See Dwg. GN1 thru GN3

Edge Distance: AS NOTED | Holes: 1-1/16"Ø U.N.O.

WSLLC No.: 179-18 | Sh. 30AB

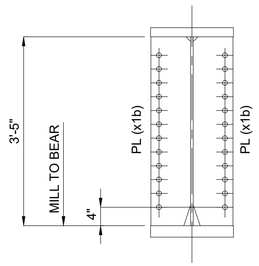

SECTION "A-A"

(2 PLACES)

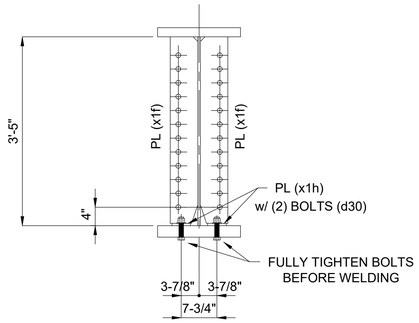

SECTION "B-B"

(6 PLACES)

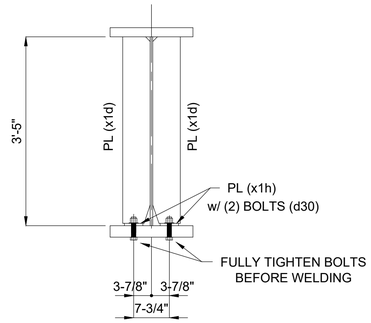

SECTION "C-C"

(17 PLACES)

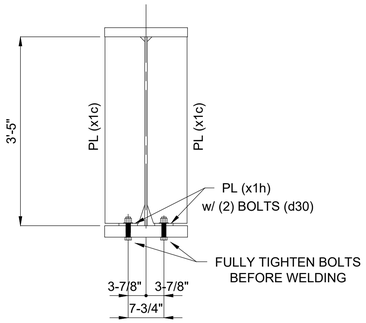

SECTION "D-D"

(2 PLACES)

BILL OF MATERIAL

Kind	Section	Length	Req.	Mark	Grade	Remarks
		GIRDERS	1	30G12B		(28 064 #)
PL	41" x 9/16"	72'-4 7/16"	1	a30	A709-50-F2	5 687
PL	18" x 2"	72'-7 1/16"	1	b30	A709-50-T2	8 885
PL	18" x 2-1/2"	72'-7 1/16"	1	c30	A709-50-F2	11 106
BOLT	1" HSBN1W	0'-4 3/4"	100	d30	F3125 HS TYPE 1 (GALV)	188
PL	8-5/8" x 1/2"	3'-5"	4	x1b	A709-50	200
PL	8-5/8" x 1/2"	3'-4 1/2"	4	x1c	A709-50	198
PL	6" x 1/2"	3'-4 1/2"	34	x1d	A709-50	1 173
PL	6" x 1/2"	3'-4 1/2"	12	x1f	A709-50	414
PL	4" x 1/2"	0'-7 1/2"	50	x1h	A709-50	213

1

ONE - GIRDER - 30G12B

SHOP NOTES:

1) SEE SHEET X1 FOR GIRDER STANDARDS.
2) SEE SHEET C4 FOR WEB CUTTING DIAGRAM AND FLANGE ASSEMBLY DIAGRAM.
3) SEE SHEET GN1 THRU GN3 FOR GENERAL NOTES AND PAINT NOTES.
4) SEE SHEET GN2 FOR GIRDER ASSEMBLY WELD DETAILS AND WELD TERMINATION DETAILS.

1	REVISIONS TO SHOP BOLTS	08-11-20

REV / RELEASE RECORD

0	FINAL APPROVAL / PROD.	09-20-19
C	FINAL APPROVAL	06-21-19
B	REL. FOR APPROVAL	05-23-19
A	REL. FOR INTERNAL REVIEW	04-08-19

GIRDER 30G12B

WABASH

WABASH STEEL COMPANY, LLC
2007 OLIPHANT DRIVE
VINCENNES, INDIANA 47591

Drawn	Checked	Approved	Revised
DMW 3-26-19	DJW 3-29-19		

PROJECT NO. CUY-IR490/SR 010-2.09/19.28
SFN: 1801519 ~ REF. NO. 20
PID NO. 96833
BR. NO. CUY-010-2039
NORFOLK SOUTHERN RAILROAD OVER OH-10
CUYAHOGA COUNTY, OHIO
CONTRACTOR: KOKOSING
OWNER: OHIO DEPARTMENT OF TRANSPORTATION

Shop Paint: See Dwg. GN1 thru GN3

Edge Distance: AS NOTED | Holes: 1-1/16"Ø U.N.O.

WSLLC No.: 179-18 | Sh. 30B

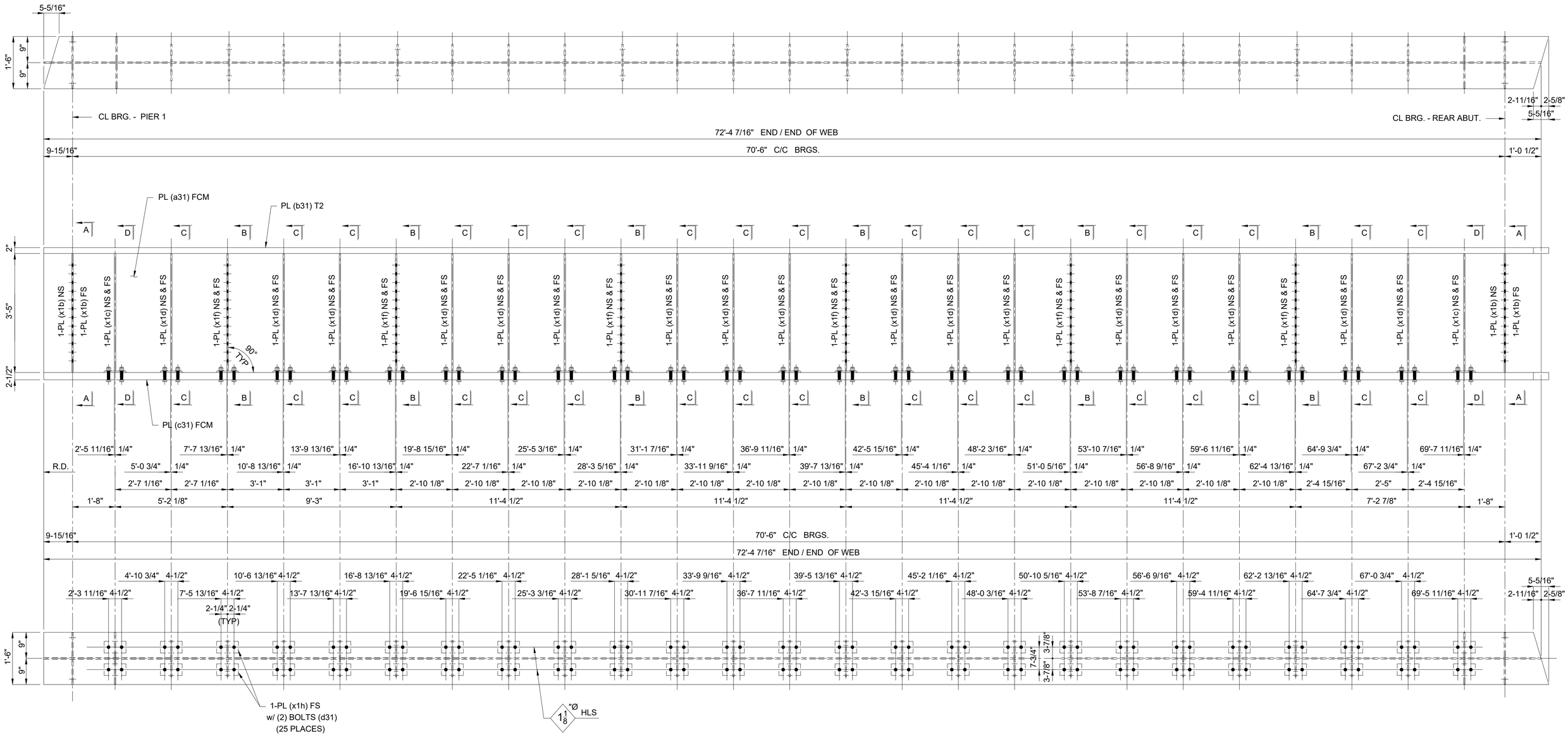

ONE - GIRDER - 31G13B

SHOP NOTES:

1) SEE SHEET X1 FOR GIRDER STANDARDS.
2) SEE SHEET C4 FOR WEB CUTTING DIAGRAM AND FLANGE ASSEMBLY DIAGRAM.
3) SEE SHEET GN1 THRU GN3 FOR GENERAL NOTES AND PAINT NOTES.
4) SEE SHEET GN2 FOR GIRDER ASSEMBLY WELD DETAILS AND WELD TERMINATION DETAILS.
5) SEE SHEET 31B FOR B.O.M.

REV / RELEASE RECORD		
0	FINAL APPROVAL / PROD.	09-20-19
C	FINAL APPROVAL	06-21-19
B	REL. FOR APPROVAL	05-23-19
A	REL. FOR INTERNAL REVIEW	04-08-19

GIRDER 31G13B

WABASH

WABASH STEEL COMPANY, LLC
2007 OLIPHANT DRIVE
VINCENNES, INDIANA 47591

Drawn	Checked	Approved	Revised
DMW 3-27-19	DJW 3-30-19		

PROJECT NO. CUY-IR490/SR 010-2.09/19.28
SFN: 1801519 ~ REF. NO. 20
PID NO. 96833
BR. NO. CUY-010-2039
NORFOLK SOUTHERN RAILROAD OVER OH-10
CUYAHOGA COUNTY, OHIO
CONTRACTOR: KOKOSING
OWNER: OHIO DEPARTMENT OF TRANSPORTATION

Shop Paint: See Dwg. GN1 thru GN3

Edge Distance: AS NOTED | Holes: 1-1/16"Ø U.N.O.

WSLLC No.: 179-18 | Sh. 31AB

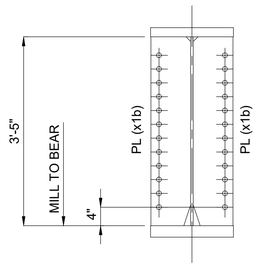

SECTION "A-A"

(2 PLACES)

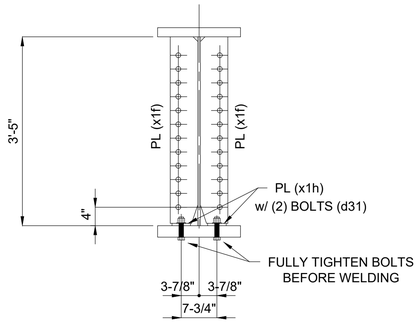

SECTION "B-B"

(6 PLACES)

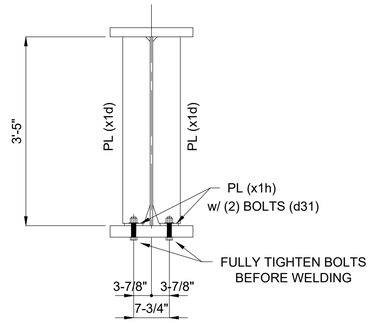

SECTION "C-C"

(17 PLACES)

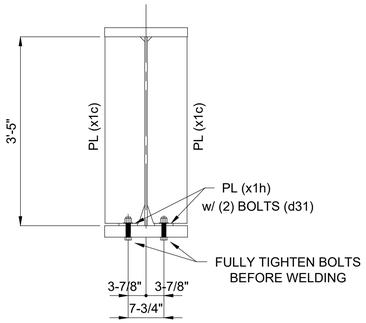

SECTION "D-D"

(2 PLACES)

BILL OF MATERIAL

Kind	Section	Length	Req.	Mark	Grade	Remarks
		GIRDERS	1	31G13B		(28 064 #)
PL	41" x 9/16"	72'-4 7/16"	1	a31	A709-50-F2	5 687
PL	18" x 2"	72'-7 1/16"	1	b31	A709-50-T2	8 885
PL	18" x 2-1/2"	72'-7 1/16"	1	c31	A709-50-F2	11 106
BOLT	1" HSBN1W	0'-4 3/4"	100	d31	F3125 HS TYPE 1 (GALV)	188
PL	8-5/8" x 1/2"	3'-5"	4	x1b	A709-50	200
PL	8-5/8" x 1/2"	3'-4 1/2"	4	x1c	A709-50	198
PL	6" x 1/2"	3'-4 1/2"	34	x1d	A709-50	1 173
PL	6" x 1/2"	3'-4 1/2"	12	x1f	A709-50	414
PL	4" x 1/2"	0'-7 1/2"	50	x1h	A709-50	213

1

ONE - GIRDER - 31G13B

SHOP NOTES:

1) SEE SHEET X1 FOR GIRDER STANDARDS.
2) SEE SHEET C4 FOR WEB CUTTING DIAGRAM AND FLANGE ASSEMBLY DIAGRAM.
3) SEE SHEET GN1 THRU GN3 FOR GENERAL NOTES AND PAINT NOTES.
4) SEE SHEET GN2 FOR GIRDER ASSEMBLY WELD DETAILS AND WELD TERMINATION DETAILS.

1	REVISIONS TO SHOP BOLTS	08-11-20

REV / RELEASE RECORD

0	FINAL APPROVAL / PROD.	09-20-19
C	FINAL APPROVAL	06-21-19
B	REL. FOR APPROVAL	05-23-19
A	REL. FOR INTERNAL REVIEW	04-08-19

GIRDER 31G13B

WABASH

WABASH STEEL COMPANY, LLC
2007 OLIPHANT DRIVE
VINCENNES, INDIANA 47591

Drawn	Checked	Approved	Revised
DMW 3-27-19	DJW 3-30-19		

PROJECT NO. CUY-IR490/SR 010-2.09/19.28
SFN: 1801519 ~ REF. NO. 20
PID NO. 96833
BR. NO. CUY-010-2039
NORFOLK SOUTHERN RAILROAD OVER OH-10
CUYAHOGA COUNTY, OHIO
CONTRACTOR: KOKOSING
OWNER: OHIO DEPARTMENT OF TRANSPORTATION

Shop Paint: See Dwg. GN1 thru GN3

Edge Distance: AS NOTED | Holes: 1-1/16"Ø U.N.O.

WSLLC No.: 179-18 | Sh. 31B

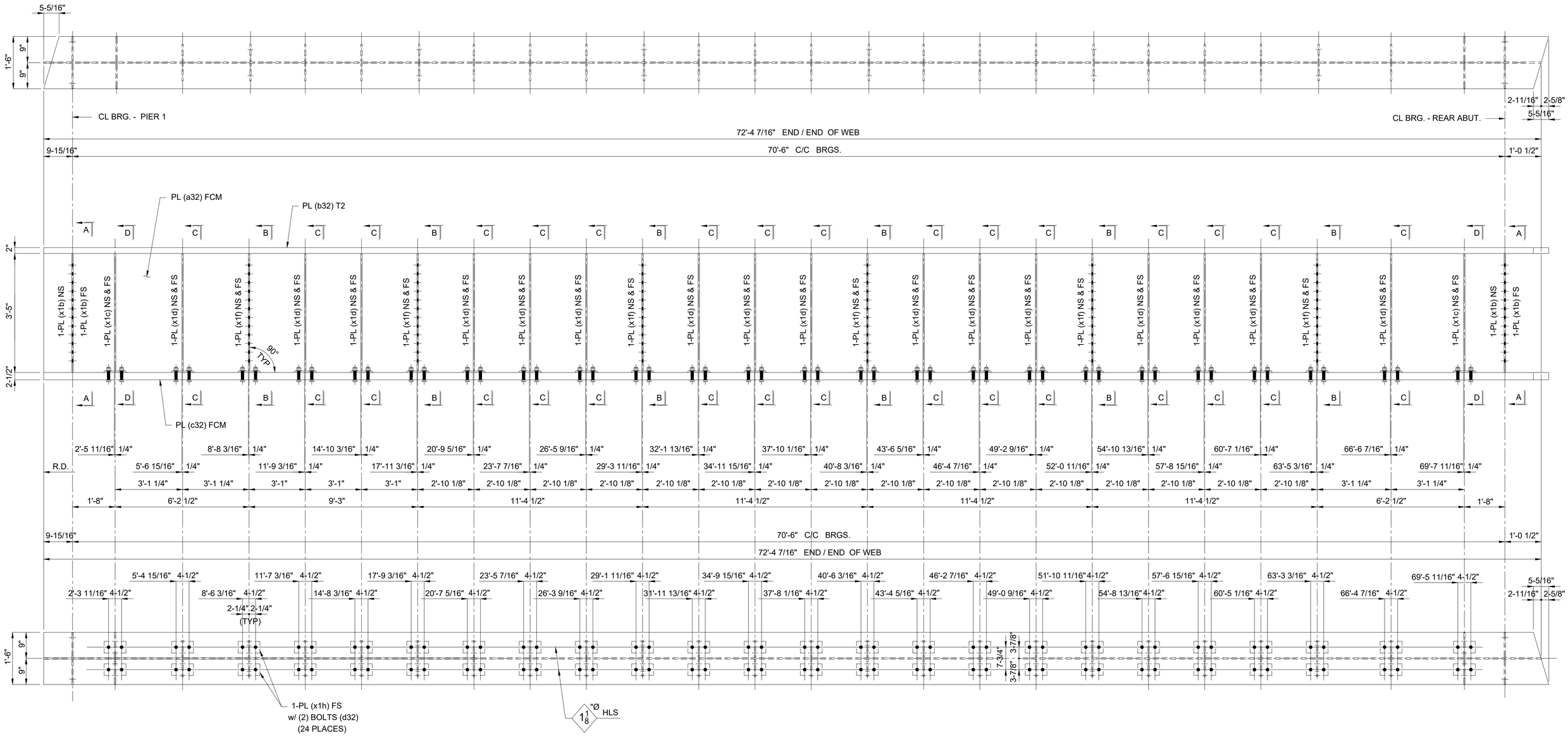

ONE - GIRDER - 32G14B

SHOP NOTES:

1) SEE SHEET X1 FOR GIRDER STANDARDS.
2) SEE SHEET C4 FOR WEB CUTTING DIAGRAM AND FLANGE ASSEMBLY DIAGRAM.
3) SEE SHEET GN1 THRU GN3 FOR GENERAL NOTES AND PAINT NOTES.
4) SEE SHEET GN2 FOR GIRDER ASSEMBLY WELD DETAILS AND WELD TERMINATION DETAILS.
5) SEE SHEET 32B FOR B.O.M.

REV / RELEASE RECORD		
0	FINAL APPROVAL / PROD.	09-20-19
C	FINAL APPROVAL	06-21-19
B	REL. FOR APPROVAL	05-23-19
A	REL. FOR INTERNAL REVIEW	04-08-19

GIRDER 32G14B

WABASH

WABASH STEEL COMPANY, LLC
2007 OLIPHANT DRIVE
VINCENNES, INDIANA 47591

Drawn	Checked	Approved	Revised
DMW 3-27-19	DJW 3-30-19		

PROJECT NO. CUY-IR490/SR 010-2.09/19.28
SFN: 1801519 ~ REF. NO. 20
PID NO. 96833
BR. NO. CUY-010-2039
NORFOLK SOUTHERN RAILROAD OVER OH-10
CUYAHOGA COUNTY, OHIO
CONTRACTOR: KOKOSING
OWNER: OHIO DEPARTMENT OF TRANSPORTATION

Shop Paint: See Dwg. GN1 thru GN3

Edge Distance: AS NOTED | Holes: 1-1/16"Ø U.N.O.

WSLLC No.: 179-18 | Sh. 32AB

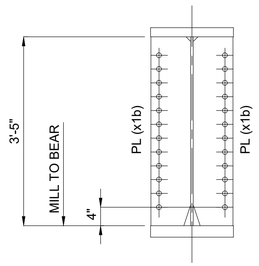

SECTION "A-A"

(2 PLACES)

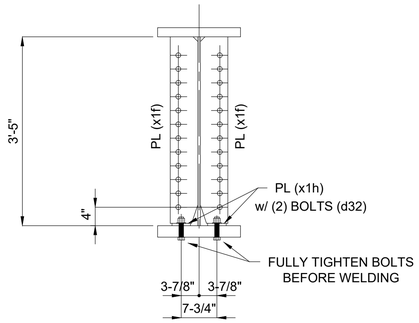

SECTION "B-B"

(6 PLACES)

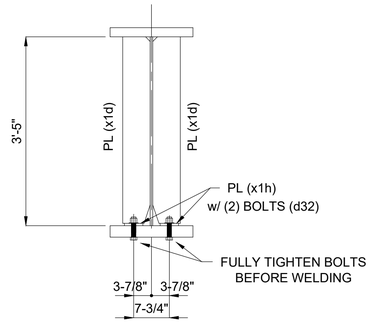

SECTION "C-C"

(16 PLACES)

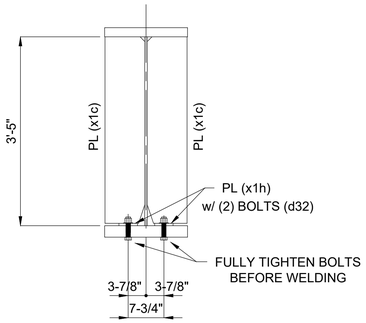

SECTION "D-D"

(2 PLACES)

BILL OF MATERIAL

Kind	Section	Length	Req.	Mark	Grade	Remarks
		GIRDERS	1	32G14B		(27 979 #)
PL	41" x 9/16"	72'-4 7/16"	1	a32	A709-50-F2	5 687
PL	18" x 2"	72'-7 1/16"	1	b32	A709-50-T2	8 885
PL	18" x 2-1/2"	72'-7 1/16"	1	c32	A709-50-F2	11 106
BOLT	1" HSBN1W	0'-4 3/4"	96	d32	F3125 HS TYPE 1 (GALV)	181
PL	8-5/8" x 1/2"	3'-5"	4	x1b	A709-50	200
PL	8-5/8" x 1/2"	3'-4 1/2"	4	x1c	A709-50	198
PL	6" x 1/2"	3'-4 1/2"	32	x1d	A709-50	1 104
PL	6" x 1/2"	3'-4 1/2"	12	x1f	A709-50	414
PL	4" x 1/2"	0'-7 1/2"	48	x1h	A709-50	204

1

ONE - GIRDER - 32G14B

SHOP NOTES:

1) SEE SHEET X1 FOR GIRDER STANDARDS.
2) SEE SHEET C4 FOR WEB CUTTING DIAGRAM AND FLANGE ASSEMBLY DIAGRAM.
3) SEE SHEET GN1 THRU GN3 FOR GENERAL NOTES AND PAINT NOTES.
4) SEE SHEET GN2 FOR GIRDER ASSEMBLY WELD DETAILS AND WELD TERMINATION DETAILS.

1	REVISIONS TO SHOP BOLTS	08-11-20

REV / RELEASE RECORD

0	FINAL APPROVAL / PROD.	09-20-19
C	FINAL APPROVAL	06-21-19
B	REL. FOR APPROVAL	05-23-19
A	REL. FOR INTERNAL REVIEW	04-08-19

GIRDER 32G14B

WABASH

WABASH STEEL COMPANY, LLC
2007 OLIPHANT DRIVE
VINCENNES, INDIANA 47591

Drawn	Checked	Approved	Revised
DMW 3-27-19	DJW 3-30-19		

PROJECT NO. CUY-IR490/SR 010-2.09/19.28
SFN: 1801519 ~ REF. NO. 20
PID NO. 96833
BR. NO. CUY-010-2039
NORFOLK SOUTHERN RAILROAD OVER OH-10
CUYAHOGA COUNTY, OHIO
CONTRACTOR: KOKOSING
OWNER: OHIO DEPARTMENT OF TRANSPORTATION

Shop Paint: See Dwg. GN1 thru GN3

Edge Distance: AS NOTED | Holes: 1-1/16"Ø U.N.O.

WSLLC No.: 179-18 | Sh. 32B

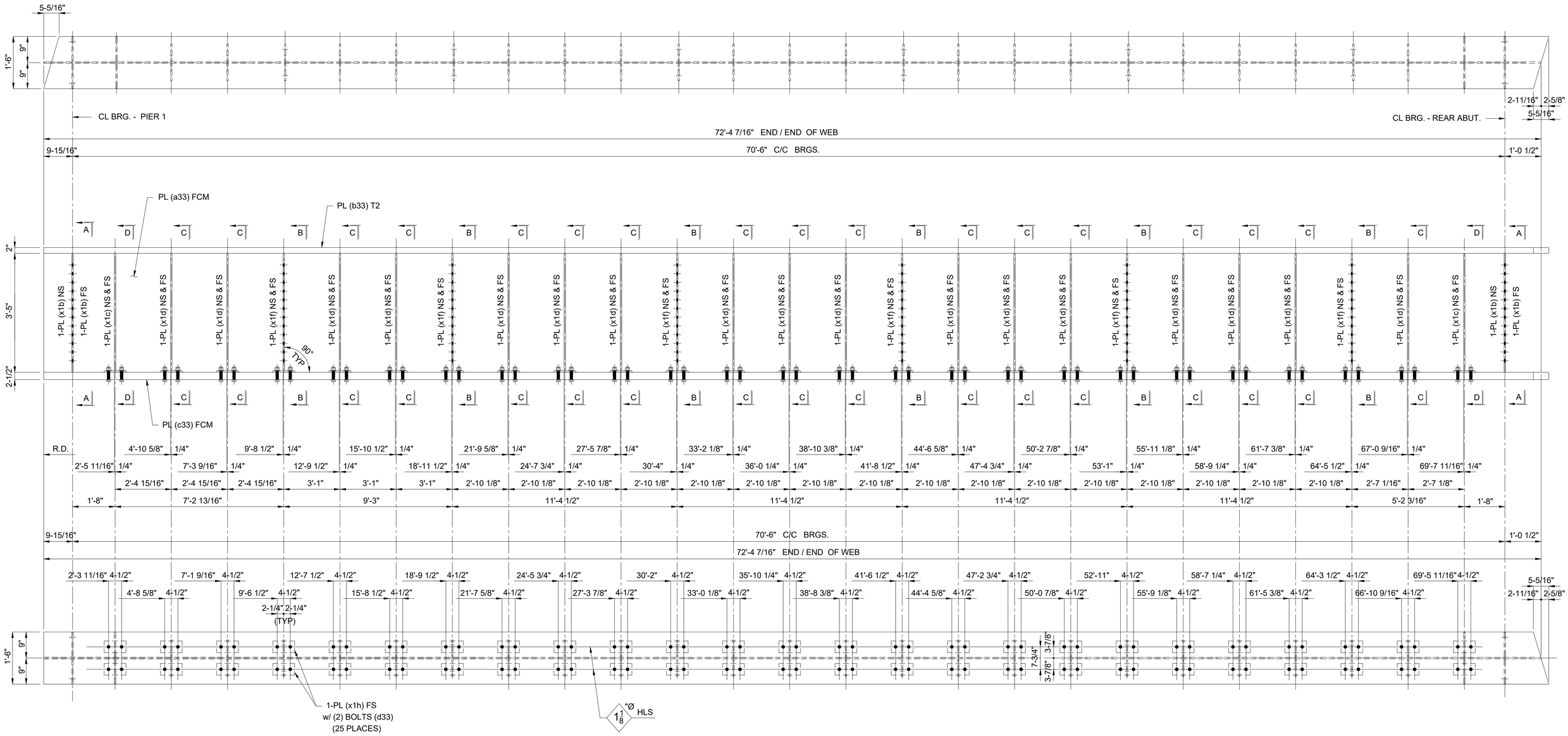

ONE - GIRDER - 33G15B

SHOP NOTES:

1) SEE SHEET X1 FOR GIRDER STANDARDS.
2) SEE SHEET C4 FOR WEB CUTTING DIAGRAM AND FLANGE ASSEMBLY DIAGRAM.
3) SEE SHEET GN1 THRU GN3 FOR GENERAL NOTES AND PAINT NOTES.
4) SEE SHEET GN2 FOR GIRDER ASSEMBLY WELD DETAILS AND WELD TERMINATION DETAILS.
5) SEE SHEET 33B FOR B.O.M.

REV / RELEASE RECORD		
0	FINAL APPROVAL / PROD.	09-20-19
C	FINAL APPROVAL	06-21-19
B	REL. FOR APPROVAL	05-23-19
A	REL. FOR INTERNAL REVIEW	04-08-19

GIRDER 33G15B

WABASH

WABASH STEEL COMPANY, LLC
2007 OLIPHANT DRIVE
VINCENNES, INDIANA 47591

Drawn	Checked	Approved	Revised
DMW 3-27-19	DJW 3-30-19		

PROJECT NO. CUY-IR490/SR 010-2.09/19.28
SFN: 1801519 ~ REF. NO. 20
PID NO. 96833
BR. NO. CUY-010-2039
NORFOLK SOUTHERN RAILROAD OVER OH-10
CUYAHOGA COUNTY, OHIO
CONTRACTOR: KOKOSING
OWNER: OHIO DEPARTMENT OF TRANSPORTATION

Shop Paint: See Dwg. GN1 thru GN3

Edge Distance: AS NOTED | Holes: 1-1/16"Ø U.N.O.

WSLLC No.: 179-18 | Sh. 33AB

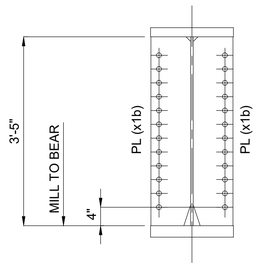

SECTION "A-A"

(2 PLACES)

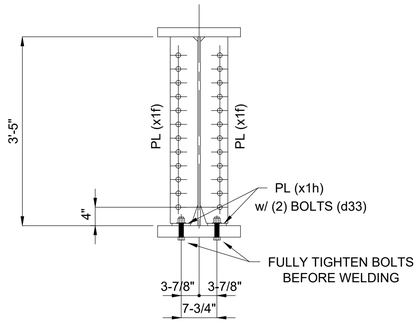

SECTION "B-B"

(6 PLACES)

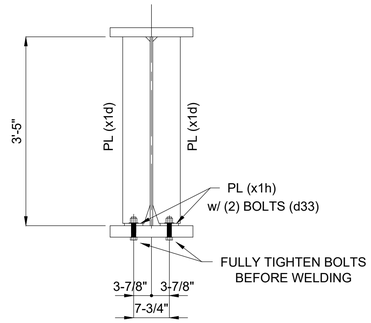

SECTION "C-C"

(17 PLACES)

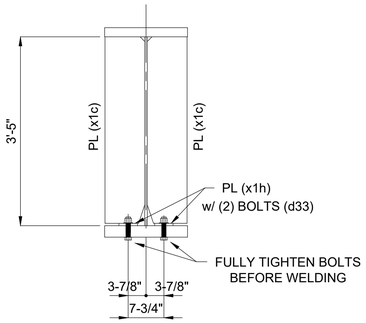

SECTION "D-D"

(2 PLACES)

BILL OF MATERIAL

Kind	Section	Length	Req.	Mark	Grade	Remarks
		GIRDERS	1	33G15B		(28 064 #)
PL	41" x 9/16"	72'-4 7/16"	1	a33	A709-50-F2	5 687
PL	18" x 2"	72'-7 1/16"	1	b33	A709-50-T2	8 885
PL	18" x 2-1/2"	72'-7 1/16"	1	c33	A709-50-F2	11 106
BOLT	1" HSBN1W	0'-4 3/4"	100	d33	F3125 HS TYPE 1 (GALV)	188
PL	8-5/8" x 1/2"	3'-5"	4	x1b	A709-50	200
PL	8-5/8" x 1/2"	3'-4 1/2"	4	x1c	A709-50	198
PL	6" x 1/2"	3'-4 1/2"	34	x1d	A709-50	1 173
PL	6" x 1/2"	3'-4 1/2"	12	x1f	A709-50	414
PL	4" x 1/2"	0'-7 1/2"	50	x1h	A709-50	213

1

ONE - GIRDER - 33G15B

SHOP NOTES:

1) SEE SHEET X1 FOR GIRDER STANDARDS.
2) SEE SHEET C4 FOR WEB CUTTING DIAGRAM AND FLANGE ASSEMBLY DIAGRAM.
3) SEE SHEET GN1 THRU GN3 FOR GENERAL NOTES AND PAINT NOTES.
4) SEE SHEET GN2 FOR GIRDER ASSEMBLY WELD DETAILS AND WELD TERMINATION DETAILS.

1	REVISIONS TO SHOP BOLTS	08-11-20

REV / RELEASE RECORD

0	FINAL APPROVAL / PROD.	09-20-19
C	FINAL APPROVAL	06-21-19
B	REL. FOR APPROVAL	05-23-19
A	REL. FOR INTERNAL REVIEW	04-08-19

GIRDER 33G15B

WABASH

WABASH STEEL COMPANY, LLC
2007 OLIPHANT DRIVE
VINCENNES, INDIANA 47591

Drawn	Checked	Approved	Revised
DMW 3-27-19	DJW 3-30-19		

PROJECT NO. CUY-IR490/SR 010-2.09/19.28
SFN: 1801519 ~ REF. NO. 20
PID NO. 96833
BR. NO. CUY-010-2039
NORFOLK SOUTHERN RAILROAD OVER OH-10
CUYAHOGA COUNTY, OHIO
CONTRACTOR: KOKOSING
OWNER: OHIO DEPARTMENT OF TRANSPORTATION

Shop Paint: See Dwg. GN1 thru GN3

Edge Distance: AS NOTED | Holes: 1-1/16"Ø U.N.O.

WSLLC No.: 179-18 | Sh. 33B

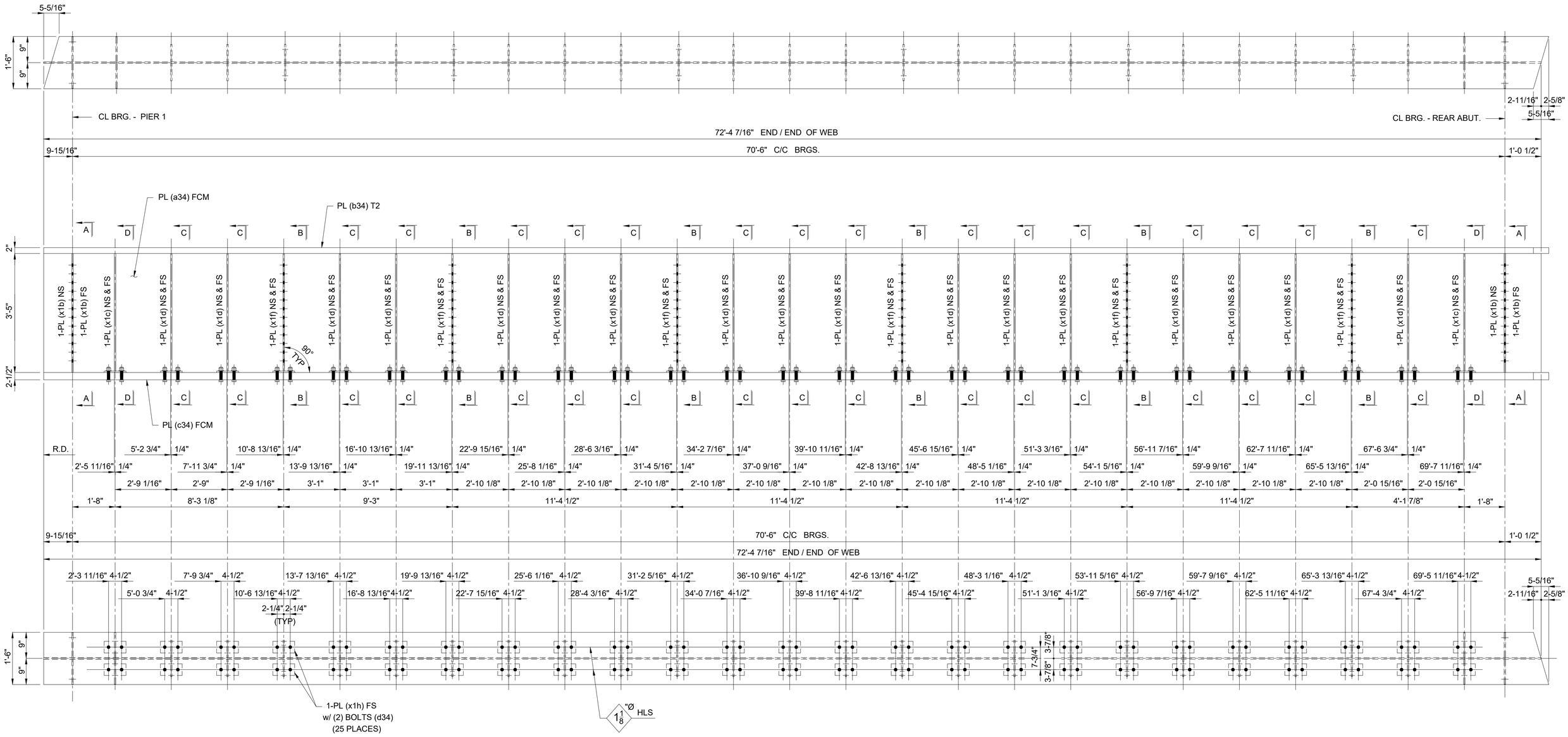

ONE - GIRDER - 34G16B

SHOP NOTES:

1) SEE SHEET X1 FOR GIRDER STANDARDS.
2) SEE SHEET C4 FOR WEB CUTTING DIAGRAM AND FLANGE ASSEMBLY DIAGRAM.
3) SEE SHEET GN1 THRU GN3 FOR GENERAL NOTES AND PAINT NOTES.
4) SEE SHEET GN2 FOR GIRDER ASSEMBLY WELD DETAILS AND WELD TERMINATION DETAILS.
5) SEE SHEET 34B FOR B.O.M.

REV / RELEASE RECORD		
0	FINAL APPROVAL / PROD.	09-20-19
C	FINAL APPROVAL	06-21-19
B	REL. FOR APPROVAL	05-23-19
A	REL. FOR INTERNAL REVIEW	04-08-19

GIRDER 34G16B

WABASH

WABASH STEEL COMPANY, LLC
2007 OLIPHANT DRIVE
VINCENNES, INDIANA 47591

Drawn	Checked	Approved	Revised
DMW 3-27-19	DJW 3-30-19		

PROJECT NO. CUY-IR490/SR 010-2.09/19.28
SFN: 1801519 ~ REF. NO. 20
PID NO. 96833
BR. NO. CUY-010-2039
NORFOLK SOUTHERN RAILROAD OVER OH-10
CUYAHOGA COUNTY, OHIO
CONTRACTOR: KOKOSING
OWNER: OHIO DEPARTMENT OF TRANSPORTATION

Shop Paint: See Dwg. GN1 thru GN3

Edge Distance: AS NOTED | Holes: 1-1/16"Ø U.N.O.

WSLLC No.: 179-18 | Sh. 34AB

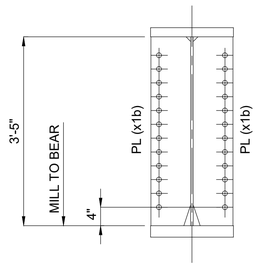

SECTION "A-A"

(2 PLACES)

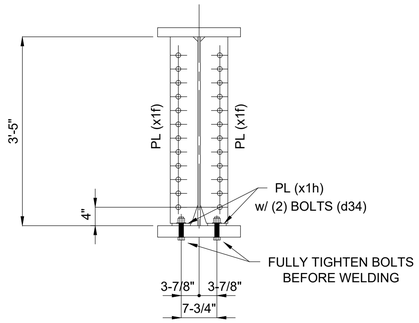

SECTION "B-B"

(6 PLACES)

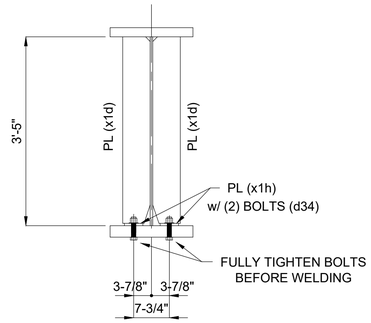

SECTION "C-C"

(17 PLACES)

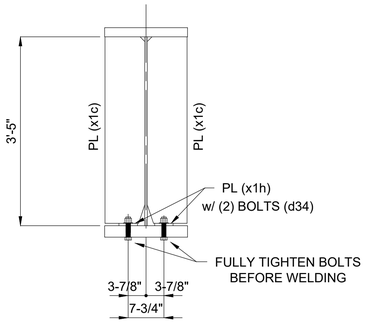

SECTION "D-D"

(2 PLACES)

BILL OF MATERIAL

Kind	Section	Length	Req.	Mark	Grade	Remarks
		GIRDERS	1	34G16B		(28 064 #)
PL	41" x 9/16"	72'-4 7/16"	1	a34	A709-50-F2	5 687
PL	18" x 2"	72'-7 1/16"	1	b34	A709-50-T2	8 885
PL	18" x 2-1/2"	72'-7 1/16"	1	c34	A709-50-F2	11 106
BOLT	1" HSBN1W	0'-4 3/4"	100	d34	F3125 HS TYPE 1 (GALV)	188
PL	8-5/8" x 1/2"	3'-5"	4	x1b	A709-50	200
PL	8-5/8" x 1/2"	3'-4 1/2"	4	x1c	A709-50	198
PL	6" x 1/2"	3'-4 1/2"	34	x1d	A709-50	1 173
PL	6" x 1/2"	3'-4 1/2"	12	x1f	A709-50	414
PL	4" x 1/2"	0'-7 1/2"	50	x1h	A709-50	213

1

ONE - GIRDER - 34G16B

SHOP NOTES:

1) SEE SHEET X1 FOR GIRDER STANDARDS.
2) SEE SHEET C4 FOR WEB CUTTING DIAGRAM AND FLANGE ASSEMBLY DIAGRAM.
3) SEE SHEET GN1 THRU GN3 FOR GENERAL NOTES AND PAINT NOTES.
4) SEE SHEET GN2 FOR GIRDER ASSEMBLY WELD DETAILS AND WELD TERMINATION DETAILS.

1	REVISIONS TO SHOP BOLTS	08-11-20

REV / RELEASE RECORD

0	FINAL APPROVAL / PROD.	09-20-19
C	FINAL APPROVAL	06-21-19
B	REL. FOR APPROVAL	05-23-19
A	REL. FOR INTERNAL REVIEW	04-08-19

GIRDER 34G16B

WABASH

WABASH STEEL COMPANY, LLC
2007 OLIPHANT DRIVE
VINCENNES, INDIANA 47591

Drawn	Checked	Approved	Revised
DMW 3-27-19	DJW 3-30-19		

PROJECT NO. CUY-IR490/SR 010-2.09/19.28
SFN: 1801519 ~ REF. NO. 20
PID NO. 96833
BR. NO. CUY-010-2039
NORFOLK SOUTHERN RAILROAD OVER OH-10
CUYAHOGA COUNTY, OHIO
CONTRACTOR: KOKOSING
OWNER: OHIO DEPARTMENT OF TRANSPORTATION

Shop Paint: See Dwg. GN1 thru GN3

Edge Distance: AS NOTED | Holes: 1-1/16"Ø U.N.O.

WSLLC No.: 179-18 | Sh. 34B

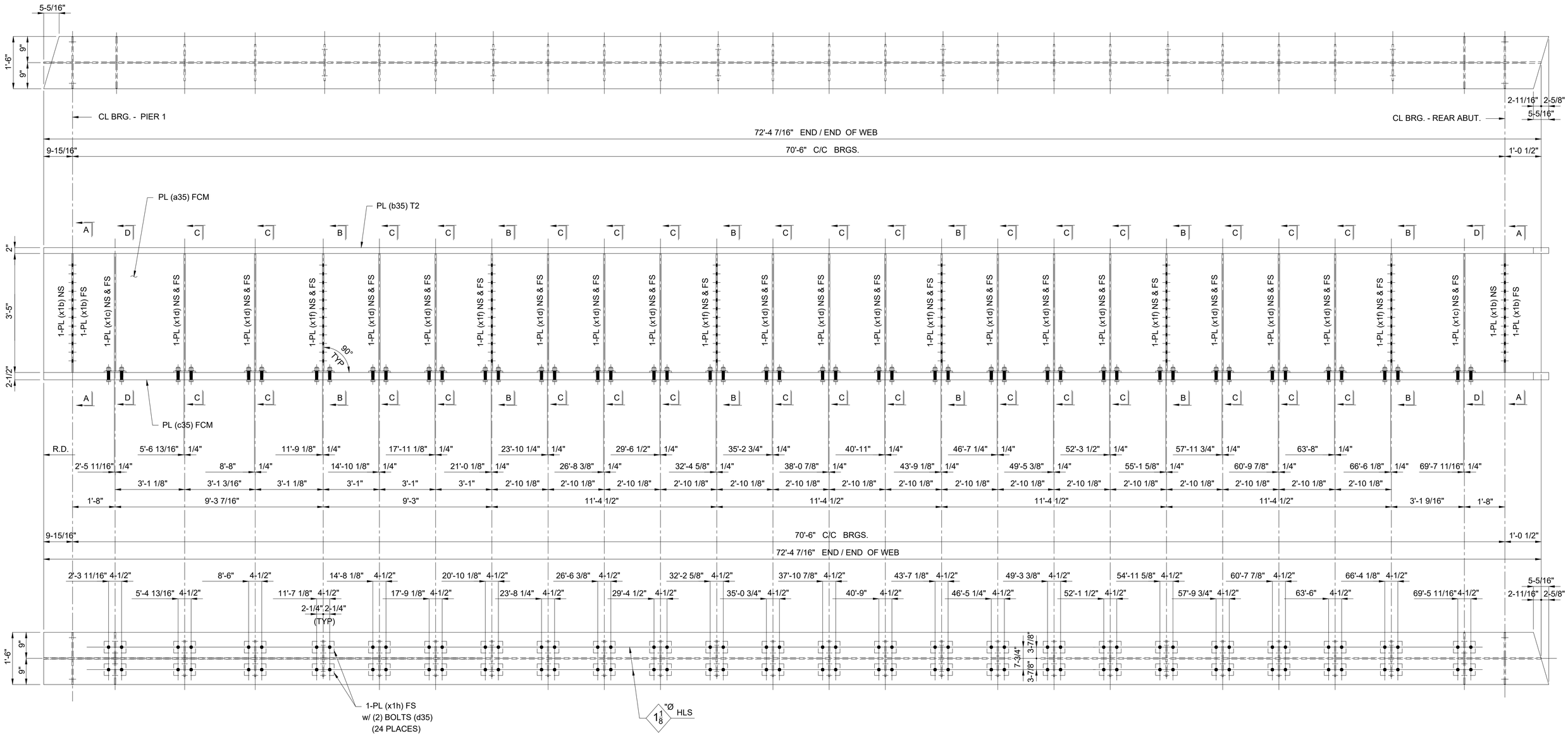

ONE - GIRDER - 35G17B

SHOP NOTES:

1) SEE SHEET X1 FOR GIRDER STANDARDS.
2) SEE SHEET C4 FOR WEB CUTTING DIAGRAM AND FLANGE ASSEMBLY DIAGRAM.
3) SEE SHEET GN1 THRU GN3 FOR GENERAL NOTES AND PAINT NOTES.
4) SEE SHEET GN2 FOR GIRDER ASSEMBLY WELD DETAILS AND WELD TERMINATION DETAILS.
5) SEE SHEET 35B FOR B.O.M.

REV / RELEASE RECORD		
0	FINAL APPROVAL / PROD.	09-20-19
C	FINAL APPROVAL	06-21-19
B	REL. FOR APPROVAL	05-23-19
A	REL. FOR INTERNAL REVIEW	04-08-19

GIRDER 35G17B

WABASH

WABASH STEEL COMPANY, LLC
2007 OLIPHANT DRIVE
VINCENNES, INDIANA 47591

Drawn	Checked	Approved	Revised
DMW 3-27-19	DJW 3-30-19		

PROJECT NO. CUY-IR490/SR 010-2.09/19.28
SFN: 1801519 ~ REF. NO. 20
PID NO. 96833
BR. NO. CUY-010-2039
NORFOLK SOUTHERN RAILROAD OVER OH-10
CUYAHOGA COUNTY, OHIO
CONTRACTOR: KOKOSING
OWNER: OHIO DEPARTMENT OF TRANSPORTATION

Shop Paint: See Dwg. GN1 thru GN3

Edge Distance: AS NOTED | Holes: 1-1/16"Ø U.N.O.

WSLLC No.: 179-18 | Sh. 35AB

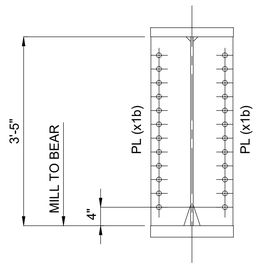

SECTION "A-A"

(2 PLACES)

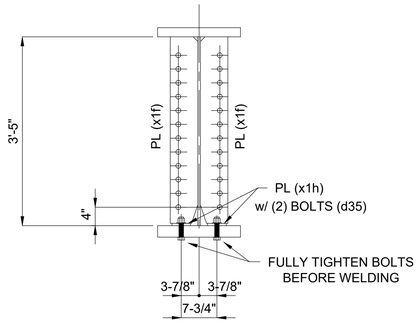

SECTION "B-B"

(6 PLACES)

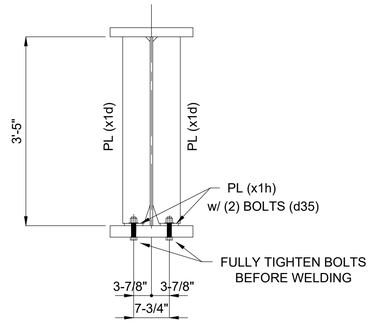

SECTION "C-C"

(16 PLACES)

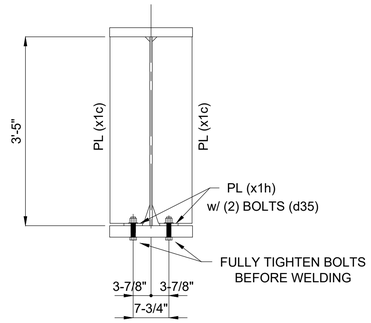

SECTION "D-D"

(2 PLACES)

BILL OF MATERIAL

Kind	Section	Length	Req.	Mark	Grade	Remarks
		GIRDERS	1	35G17B		(27 979 #)
PL	41" x 9/16"	72'-4 7/16"	1	a35	A709-50-F2	5 687
PL	18" x 2"	72'-7 1/16"	1	b35	A709-50-T2	8 885
PL	18" x 2-1/2"	72'-7 1/16"	1	c35	A709-50-F2	11 106
BOLT	1" HSBN1W	0'-4 3/4"	96	d35	F3125 HS TYPE 1 (GALV)	181
PL	8-5/8" x 1/2"	3'-5"	4	x1b	A709-50	200
PL	8-5/8" x 1/2"	3'-4 1/2"	4	x1c	A709-50	198
PL	6" x 1/2"	3'-4 1/2"	32	x1d	A709-50	1 104
PL	6" x 1/2"	3'-4 1/2"	12	x1f	A709-50	414
PL	4" x 1/2"	0'-7 1/2"	48	x1h	A709-50	204

1

ONE - GIRDER - 35G17B

SHOP NOTES:

1) SEE SHEET X1 FOR GIRDER STANDARDS.
2) SEE SHEET C4 FOR WEB CUTTING DIAGRAM AND FLANGE ASSEMBLY DIAGRAM.
3) SEE SHEET GN1 THRU GN3 FOR GENERAL NOTES AND PAINT NOTES.
4) SEE SHEET GN2 FOR GIRDER ASSEMBLY WELD DETAILS AND WELD TERMINATION DETAILS.

1	REVISIONS TO SHOP BOLTS	08-11-20

REV / RELEASE RECORD

0	FINAL APPROVAL / PROD.	09-20-19
C	FINAL APPROVAL	06-21-19
B	REL. FOR APPROVAL	05-23-19
A	REL. FOR INTERNAL REVIEW	04-08-19

GIRDER 35G17B

WABASH

WABASH STEEL COMPANY, LLC
2007 OLIPHANT DRIVE
VINCENNES, INDIANA 47591

Drawn	Checked	Approved	Revised
DMW 3-27-19	DJW 3-30-19		

PROJECT NO. CUY-IR490/SR 010-2.09/19.28
SFN: 1801519 ~ REF. NO. 20
PID NO. 96833
BR. NO. CUY-010-2039
NORFOLK SOUTHERN RAILROAD OVER OH-10
CUYAHOGA COUNTY, OHIO
CONTRACTOR: KOKOSING
OWNER: OHIO DEPARTMENT OF TRANSPORTATION

Shop Paint: See Dwg. GN1 thru GN3

Edge Distance: AS NOTED | Holes: 1-1/16"Ø U.N.O.

WSLLC No.: 179-18 | Sh. 35B

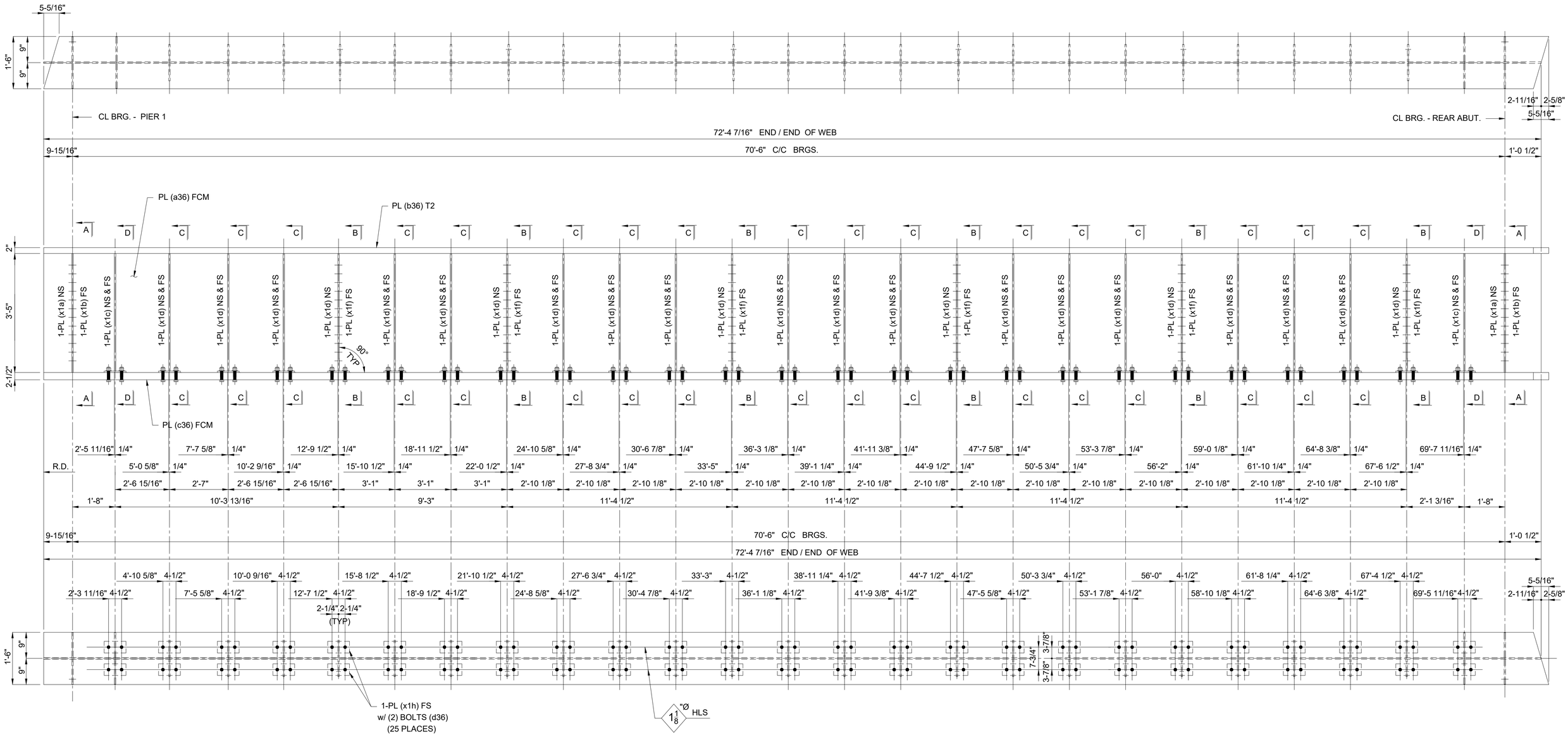

ONE - GIRDER - 36G18B

SHOP NOTES:

1) SEE SHEET X1 FOR GIRDER STANDARDS.
2) SEE SHEET C3 FOR WEB CUTTING DIAGRAM AND FLANGE ASSEMBLY DIAGRAM.
3) SEE SHEET GN1 THRU GN3 FOR GENERAL NOTES AND PAINT NOTES.
4) SEE SHEET GN2 FOR GIRDER ASSEMBLY WELD DETAILS AND WELD TERMINATION DETAILS.
5) SEE SHEET 36B FOR B.O.M.

REV / RELEASE RECORD		
0	FINAL APPROVAL / PROD.	09-20-19
C	FINAL APPROVAL	06-21-19
B	REL. FOR APPROVAL	05-23-19
A	REL. FOR INTERNAL REVIEW	04-08-19

GIRDER 36G18B

WABASH

WABASH STEEL COMPANY, LLC
2007 OLIPHANT DRIVE
VINCENNES, INDIANA 47591

Drawn	Checked	Approved	Revised
DMW 3-27-19	DJW 3-30-19		

PROJECT NO. CUY-IR490/SR 010-2.09/19.28
SFN: 1801519 ~ REF. NO. 20
PID NO. 96833
BR. NO. CUY-010-2039
NORFOLK SOUTHERN RAILROAD OVER OH-10
CUYAHOGA COUNTY, OHIO
CONTRACTOR: KOKOSING
OWNER: OHIO DEPARTMENT OF TRANSPORTATION

Shop Paint: See Dwg. GN1 thru GN3

Edge Distance: AS NOTED | Holes: 1-1/16"Ø U.N.O.

WSLLC No.: 179-18 | Sh. 36AB

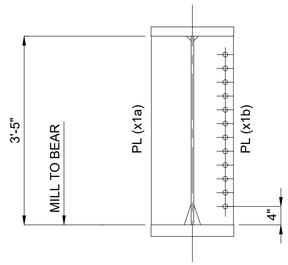

SECTION "A-A"

(2 PLACES)

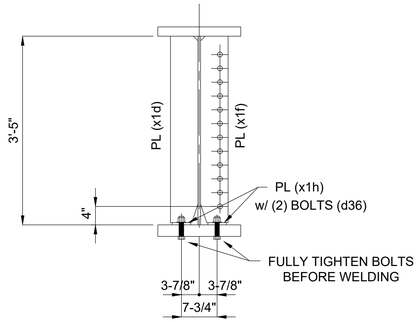

SECTION "B-B"

(6 PLACES)

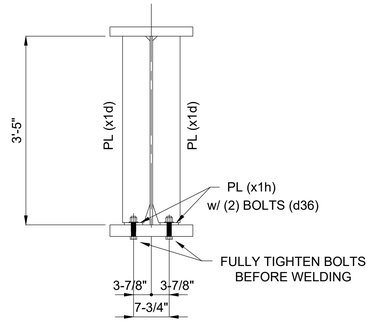

SECTION "C-C"

(17 PLACES)

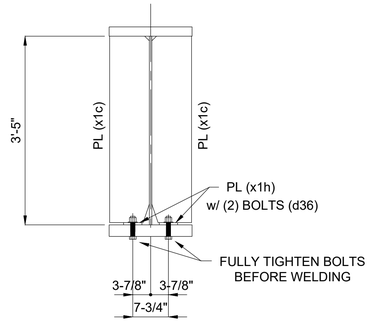

SECTION "D-D"

(2 PLACES)

BILL OF MATERIAL

Kind	Section	Length	Req.	Mark	Grade	Remarks
		GIRDERS	1	36G18B		(28 064 #)
PL	41" x 9/16"	72'-4 7/16"	1	a36	A709-50-F2	5 687
PL	18" x 2"	72'-7 1/16"	1	b36	A709-50-T2	8 885
PL	18" x 2-1/2"	72'-7 1/16"	1	c36	A709-50-F2	11 106
BOLT	1" HSBN1W	0'-4 3/4"	100	d36	F3125 HS TYPE 1 (GALV)	188
PL	8-5/8" x 1/2"	3'-5"	2	x1a	A709-50	100
PL	8-5/8" x 1/2"	3'-5"	2	x1b	A709-50	100
PL	8-5/8" x 1/2"	3'-4 1/2"	4	x1c	A709-50	198
PL	6" x 1/2"	3'-4 1/2"	40	x1d	A709-50	1 380
PL	6" x 1/2"	3'-4 1/2"	6	x1f	A709-50	207
PL	4" x 1/2"	0'-7 1/2"	50	x1h	A709-50	213

1

ONE - GIRDER - 36G18B

SHOP NOTES:

1) SEE SHEET X1 FOR GIRDER STANDARDS.
2) SEE SHEET C3 FOR WEB CUTTING DIAGRAM AND FLANGE ASSEMBLY DIAGRAM.
3) SEE SHEET GN1 THRU GN3 FOR GENERAL NOTES AND PAINT NOTES.
4) SEE SHEET GN2 FOR GIRDER ASSEMBLY WELD DETAILS AND WELD TERMINATION DETAILS.

1	REVISIONS TO SHOP BOLTS	08-11-20

REV / RELEASE RECORD

0	FINAL APPROVAL / PROD.	09-20-19
C	FINAL APPROVAL	06-21-19
B	REL. FOR APPROVAL	05-23-19
A	REL. FOR INTERNAL REVIEW	04-08-19

GIRDER 36G18B

WABASH

WABASH STEEL COMPANY, LLC
2007 OLIPHANT DRIVE
VINCENNES, INDIANA 47591

Drawn	Checked	Approved	Revised
DMW 3-27-19	DJW 3-30-19		

PROJECT NO. CUY-IR490/SR 010-2.09/19.28
SFN: 1801519 ~ REF. NO. 20
PID NO. 96833
BR. NO. CUY-010-2039
NORFOLK SOUTHERN RAILROAD OVER OH-10
CUYAHOGA COUNTY, OHIO
CONTRACTOR: KOKOSING
OWNER: OHIO DEPARTMENT OF TRANSPORTATION

Shop Paint: See Dwg. GN1 thru GN3

Edge Distance: AS NOTED | Holes: 1-1/16"Ø U.N.O.

WSLLC No.: 179-18 | Sh. 36B

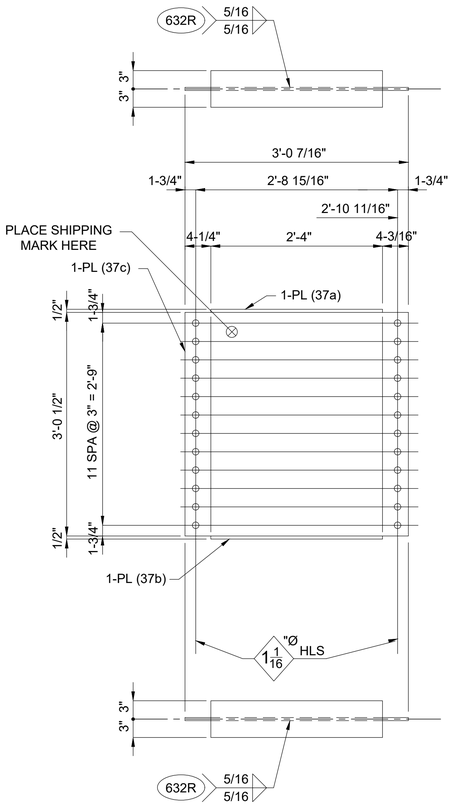

133 - DIAPHRAGMS - A37

77 ~ SHOP ASSEMBLY
56 ~ FIELD ASSEMBLY

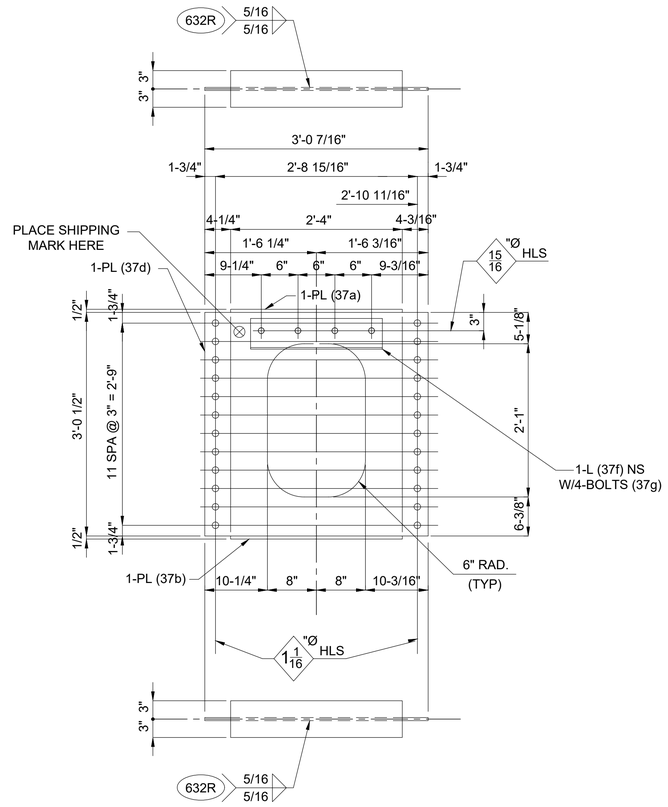

22 - DIAPHRAGMS - B37

11 ~ SHOP ASSEMBLY
11 ~ FIELD ASSEMBLY

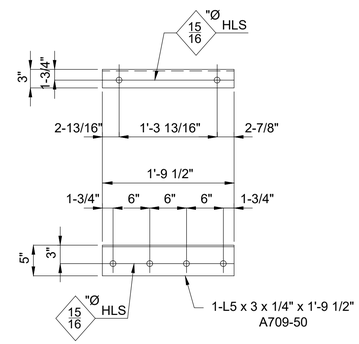

DETAIL OF L (37f)

22 - REQ'D.

BILL OF MATERIAL

Kind	Section	Length	Req.	Mark	Grade	Remarks
		DIAPHRAGMS	133	A37		(31 334 #)
PL	6" x 1/2"	2'-4"	133	37a	A709-50	3 165
PL	6" x 1/2"	2'-4"	133	37b	A709-50	3 165
PL	36-1/2" x 1/2"	3'-0 7/16"	133	37c	A709-50	25 004
		DIAPHRAGMS	22	B37		(4 298 #)
PL	6" x 1/2"	2'-4"	22	37a	A709-50	524
PL	6" x 1/2"	2'-4"	22	37b	A709-50	524
PL	36-1/2" x 1/2"	3'-0 7/16"	22	37d	A709-50	2 904
L	5 x 3 x 1/4"	1'-9 1/2"	22	37f	A709-50	260
BOLT	7/8" HSBN1W	0'-2 1/4"	88	37g	F3125 HS TYPE 1 (GALV)	86

SHOP NOTES:

1) SEE SHEET GN1 THRU GN3 FOR GENERAL NOTES AND PAINT NOTES.
2) SEE SHEET GN2 FOR WELD DETAILS AND WELD TERMINATION DETAILS.

REV / RELEASE RECORD		
0	FINAL APPROVAL / PROD.	09-20-19
C	FINAL APPROVAL	06-21-19
B	REL. FOR APPROVAL	05-23-19
A	REL. FOR INTERNAL REVIEW	04-08-19

DIAPHRAGM DETAILS

WABASH

WABASH STEEL COMPANY, LLC
2007 OLIPHANT DRIVE
VINCENNES, INDIANA 47591

Drawn	Checked	Approved	Revised
DMW 3-28-19	DJW 4-01-19		

PROJECT NO. CUY-IR490/SR 010-2.09/19.28
SFN: 1801519 ~ REF. NO. 20
PID NO. 96833
BR. NO. CUY-010-2039
NORFOLK SOUTHERN RAILROAD OVER OH-10
CUYAHOGA COUNTY, OHIO
CONTRACTOR: KOKOSING
OWNER: OHIO DEPARTMENT OF TRANSPORTATION

Shop Paint: See Dwg. GN1 thru GN3
Edge Distance: AS NOTED | Holes: 1-1/16"Ø U.N.O.
WSLLC No.: 179-18 | Sh. 37

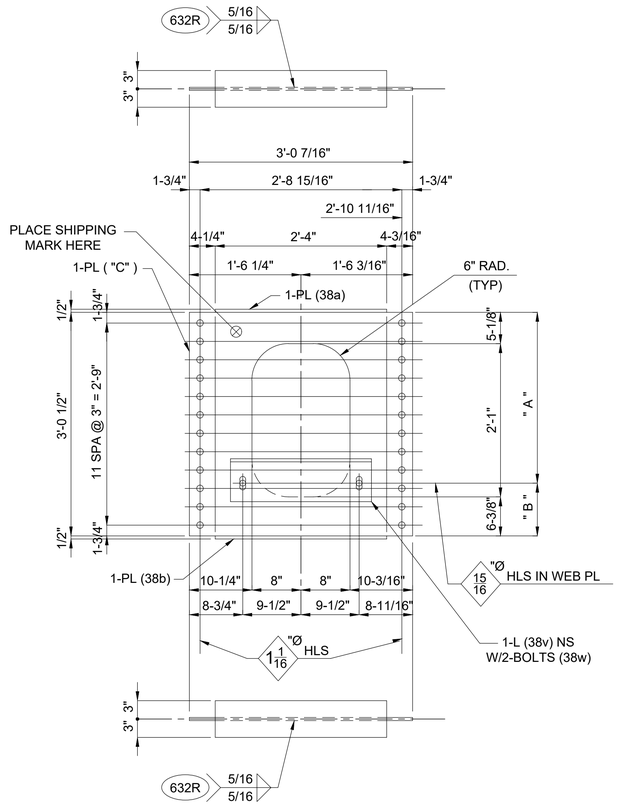

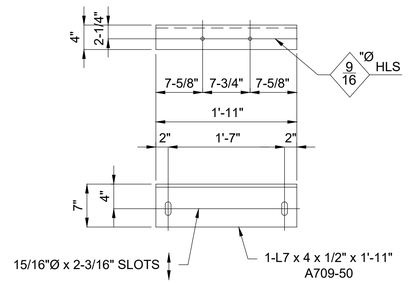

DETAIL OF L (38v)

30 - REQ'D.

MARK	QUAN	"A"	"B"	"C"	ASSEMBLY POSITION
A38	3	1'-9 15/16"	1'-2 9/16"	38c	FIELD ASSEMBLY
B38	3	1'-11 5/16"	1'-1 3/16"	38d	FIELD ASSEMBLY
C38	3	2'-0 13/16"	11 11/16"	38f	FIELD ASSEMBLY
D38	3	2'-2 3/8"	10 1/8"	38g	FIELD ASSEMBLY
E38	3	2'-3 3/4"	8 3/4"	38h	FIELD ASSEMBLY
F38	1	2'-5 1/16"	7 7/16"	38k	FIELD ASSEMBLY
G38	1	2'-5 1/2"	7"	38m	FIELD ASSEMBLY
H38	3	2'-5"	7 1/2"	38n	FIELD ASSEMBLY
J38	3	2'-4"	8 1/2"	38p	FIELD ASSEMBLY
K38	3	2'-2 15/16"	9 9/16"	38r	FIELD ASSEMBLY
L38	3	2'-1 15/16"	10 9/16"	38s	FIELD ASSEMBLY
M38	1	2'-1 1/16"	11 7/16"	38t	FIELD ASSEMBLY

BILL OF MATERIAL

Kind	Section	Length	Req.	Mark	Grade	Remarks
		DIAPHRAGMS	3	A38		(648 #)
		DIAPHRAGMS	3	B38		(648 #)
		DIAPHRAGMS	3	C38		(648 #)
		DIAPHRAGMS	3	D38		(648 #)
		DIAPHRAGMS	3	E38		(648 #)
		DIAPHRAGMS	1	F38		(216 #)
		DIAPHRAGMS	1	G38		(216 #)
		DIAPHRAGMS	3	H38		(648 #)
		DIAPHRAGMS	3	J38		(648 #)
		DIAPHRAGMS	3	K38		(648 #)
		DIAPHRAGMS	3	L38		(648 #)
		DIAPHRAGMS	1	M38		(216 #)
PL	6" x 1/2"	2'-4"	30	38a	A709-50	714
PL	6" x 1/2"	2'-4"	30	38b	A709-50	714
PL	36-1/2" x 1/2"	3'-0 7/16"	3	38c	A709-50	396
PL	36-1/2" x 1/2"	3'-0 7/16"	3	38d	A709-50	396
PL	36-1/2" x 1/2"	3'-0 7/16"	3	38f	A709-50	396
PL	36-1/2" x 1/2"	3'-0 7/16"	3	38g	A709-50	396
PL	36-1/2" x 1/2"	3'-0 7/16"	3	38h	A709-50	396
PL	36-1/2" x 1/2"	3'-0 7/16"	1	38k	A709-50	132
PL	36-1/2" x 1/2"	3'-0 7/16"	1	38m	A709-50	132
PL	36-1/2" x 1/2"	3'-0 7/16"	3	38n	A709-50	396
PL	36-1/2" x 1/2"	3'-0 7/16"	3	38p	A709-50	396
PL	36-1/2" x 1/2"	3'-0 7/16"	3	38r	A709-50	396
PL	36-1/2" x 1/2"	3'-0 7/16"	3	38s	A709-50	396
PL	36-1/2" x 1/2"	3'-0 7/16"	1	38t	A709-50	132
L	7 x 4 x 1/2"	1'-11"	30	38v	A709-50	1 030
BOLT	7/8" HSBN1W	0'-2 1/2"	60	38w	F3125 HS TYPE 1 (GALV)	61

SHOP NOTES:

1) SEE SHEET GN1 THRU GN3 FOR GENERAL NOTES AND PAINT NOTES.
2) SEE SHEET GN2 FOR WELD DETAILS AND WELD TERMINATION DETAILS.

REV / RELEASE RECORD

0	FINAL APPROVAL / PROD.	09-20-19
C	FINAL APPROVAL	06-21-19
B	REL. FOR APPROVAL	05-23-19
A	REL. FOR INTERNAL REVIEW	04-08-19

DIAPHRAGM DETAILS

WABASH

WABASH STEEL COMPANY, LLC
2007 OLIPHANT DRIVE
VINCENNES, INDIANA 47591

Drawn	Checked	Approved	Revised
DMW 3-28-19	DJW 4-01-19		

PROJECT NO. CUY-IR490/SR 010-2.09/19.28
SFN: 1801519 ~ REF. NO. 20
PID NO. 96833
BR. NO. CUY-010-2039
NORFOLK SOUTHERN RAILROAD OVER OH-10
CUYAHOGA COUNTY, OHIO
CONTRACTOR: KOKOSING
OWNER: OHIO DEPARTMENT OF TRANSPORTATION

Shop Paint: See Dwg. GN1 thru GN3

Edge Distance: AS NOTED | Holes: 1-1/16"Ø U.N.O.

WSLLC No.: 179-18 | Sh. 38

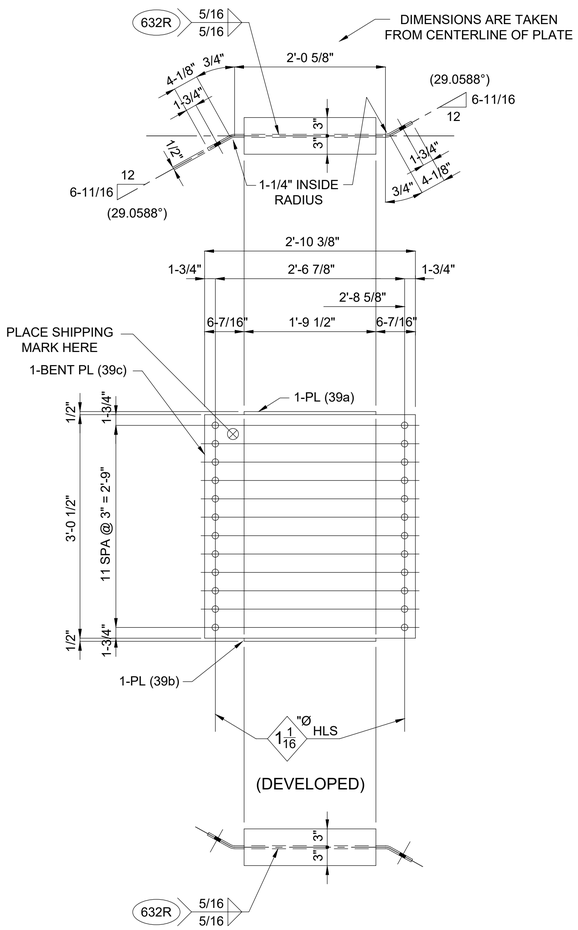

54 - DIAPHRAGMS - A39

28 ~ SHOP ASSEMBLY
26 ~ FIELD ASSEMBLY

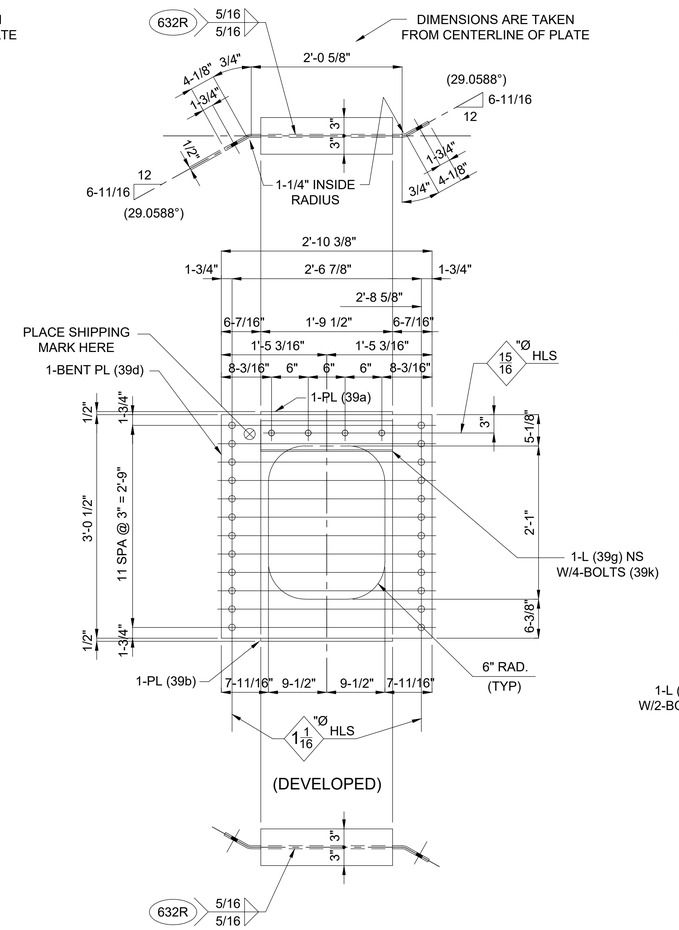

8 - DIAPHRAGMS - B39

4 ~ SHOP ASSEMBLY
4 ~ FIELD ASSEMBLY

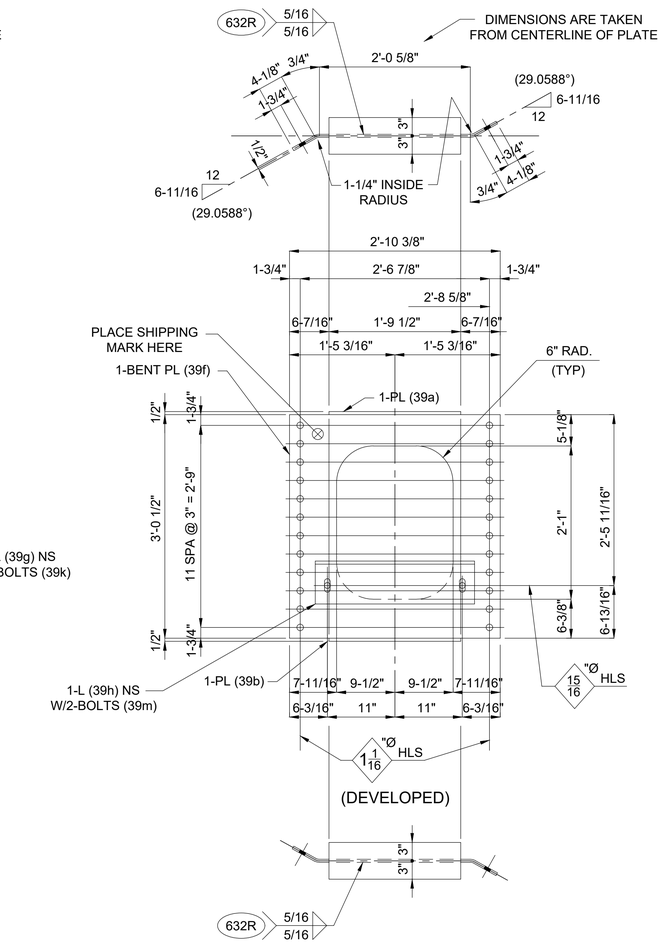

6 - DIAPHRAGMS - C39

6 ~ FIELD ASSEMBLY

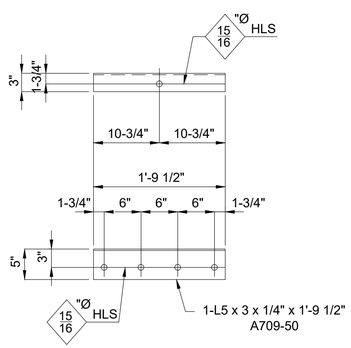

DETAIL OF L (39g)

8 - REQ'D.

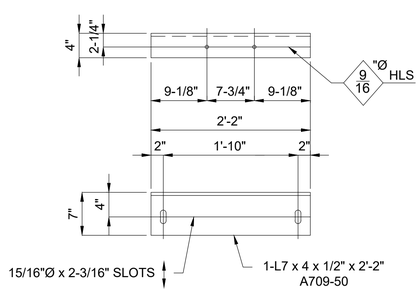

DETAIL OF L (39h)

6 - REQ'D.

SHOP NOTES:

1) SEE SHEET GN1 THRU GN3 FOR GENERAL NOTES AND PAINT NOTES.
2) SEE SHEET GN2 FOR WELD DETAILS AND WELD TERMINATION DETAILS.

BILL OF MATERIAL

Kind	Section	Length	Req.	Mark	Grade	Remarks
		DIAPHRAGMS	54	A39		(11 573 #)
PL	6" x 1/2"	1'-9 1/2"	54	39a	A709-50	987
PL	6" x 1/2"	1'-9 1/2"	54	39b	A709-50	987
PL	36-1/2" x 1/2"	2'-10 3/8"	54	39c	A709-50	9 599
		DIAPHRAGMS	8	B39		(1 306 #)
PL	6" x 1/2"	1'-9 1/2"	8	39a	A709-50	146
PL	6" x 1/2"	1'-9 1/2"	8	39b	A709-50	146
PL	36-1/2" x 1/2"	2'-10 3/8"	8	39d	A709-50	888
L	5 x 3 x 1/4"	1'-9 1/2"	8	39g	A709-50	95
BOLT	7/8" HSBN1W	0'-2 1/4"	32	39m	F3125 HS TYPE 1 (GALV)	31
		DIAPHRAGMS	6	C39		(1 130 #)
PL	6" x 1/2"	1'-9 1/2"	6	39a	A709-50	110
PL	6" x 1/2"	1'-9 1/2"	6	39b	A709-50	110
PL	36-1/2" x 1/2"	2'-10 3/8"	6	39f	A709-50	665
L	7 x 4 x 1/2"	2'-2"	6	39h	A709-50	233
BOLT	7/8" HSBN1W	0'-2 1/2"	12	39m	F3125 HS TYPE 1 (GALV)	12

REV / RELEASE RECORD		
0	FINAL APPROVAL / PROD.	09-20-19
C	FINAL APPROVAL	06-21-19
B	REL. FOR APPROVAL	05-23-19
A	REL. FOR INTERNAL REVIEW	04-08-19

DIAPHRAGM DETAILS

WABASH

WABASH STEEL COMPANY, LLC
2007 OLIPHANT DRIVE
VINCENNES, INDIANA 47591

Drawn	Checked	Approved	Revised
DMW 3-28-19	DJW 4-01-19		

PROJECT NO. CUY-IR490/SR 010-2.09/19.28
SFN: 1801519 ~ REF. NO. 20
PID NO. 96833
BR. NO. CUY-010-2039
NORFOLK SOUTHERN RAILROAD OVER OH-10
CUYAHOGA COUNTY, OHIO
CONTRACTOR: KOKOSING
OWNER: OHIO DEPARTMENT OF TRANSPORTATION

Shop Paint: See Dwg. GN1 thru GN3
Edge Distance: AS NOTED Holes: 1-1/16"Ø U.N.O.
WSLLC No.: 179-18 Sh. 39

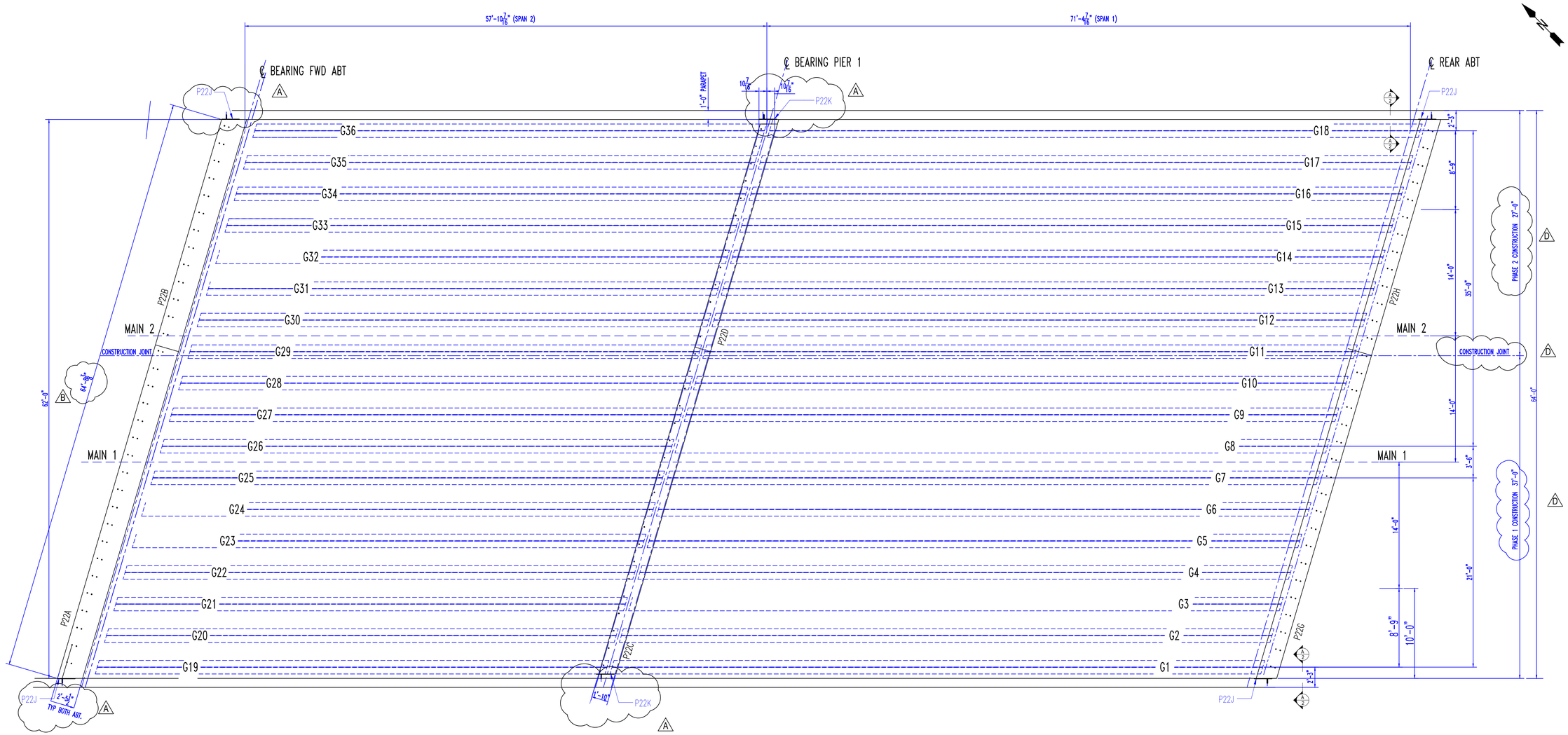

LOCATION PLAN

FIELD NOTE:

ANCHOR RODS TO BE SET IN FORMED HOLES
IN THE CONCRETE AND GROUTED IN PLACE.
MASONRY PLATE TO BE WELDED TO ANCHOR
RODS AND GROUNED SMOOTH (TYP - SEE SHEET 2)

NOTES:

SEE SHEET 2 FOR EXPANSION JOINT COVER PLATE DETAILS
SEE CONTRACT SHEETS 5/45 (7/47) & 34/45 (36/47) FOR ADDITIONAL INFORMATION

AISC CERTIFIED FABRICATOR

BRIDGE - INTERMEDIATE (MAJOR)
FRACTURE CRITICAL ENDORSEMENT
SOPHISTICATED PAINT ENDORSEMENT

REV. No.	REVISION
A	ADD VERTICAL PLATES 1/15/20
D	CHANGE DIMENSION / CENTER LINE 4/9/20

SHOP INSPECTED BY:

APPROVAL

KOKOSING CONSTRUCTION

- [x] NO EXCEPTIONS TAKEN
- [ ] MAKE CORRECTIONS AS NOTED
- [ ] REVISE AND RESUBMIT
- [ ] REJECTED
- [ ] FOR INFORMATION ONLY

REVIEW IS FOR GENERAL COMPLIANCE WITH CONTRACT DOCUMENTS
NO RESPONSIBILITY ASSUMED FOR CORRECTNESS OF DIMENSIONS OR DETAILS

BY mwf DATE 5/6/2020

OHIO STRUCTURES INC.
4030 Boardman Canfield Road, Ste. 200 D
Canfield, Ohio 44406
(330) 533-0084 FAX: (330) 533-0191

OHIO DEPARTMENT OF TRANSPORTATION
BRIDGE NO.: CUY - 010 - 2039
NORFORK SOUTHERN RAILROAD OVER OH - 10

SCALE: N.T.S.	KOKOSING CONST. CO. INC.	DRAWN: LF
DATE: 1/20		CHECK: JDC
LOCATION EXPANSION JOINT HORIZONTAL EXTENSION		
REF NO.: 100		ITEM NO.: 516
ODOT PROJ. NO.: 173000	CUYAHOGA COUNTY	DWG. NO.: E1
OSI PROJ. NO.: 19-22	PID NO.: 96833 SFN: 1801519	1 OF 3

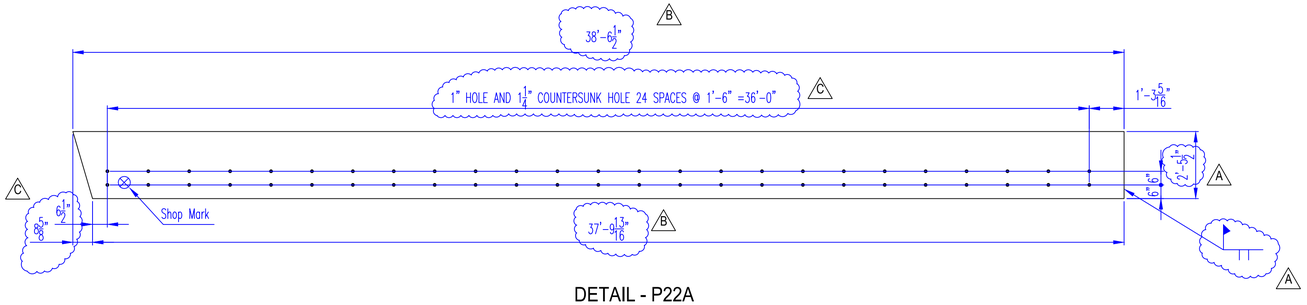

DETAIL - P22A

MATERIAL: 1/2" PL.
QUANTITY: 1 PC.

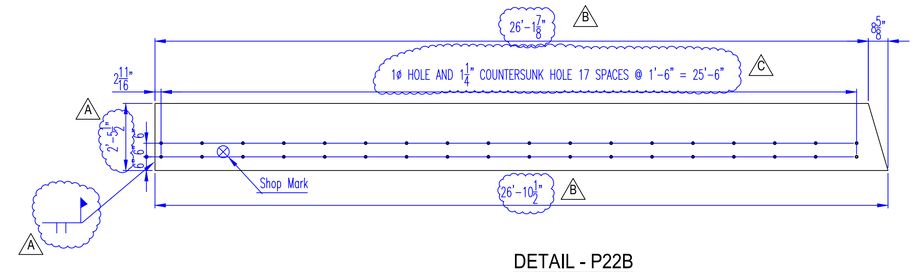

DETAIL - P22B

MATERIAL: 1/2" PL.
QUANTITY: 1 PC.

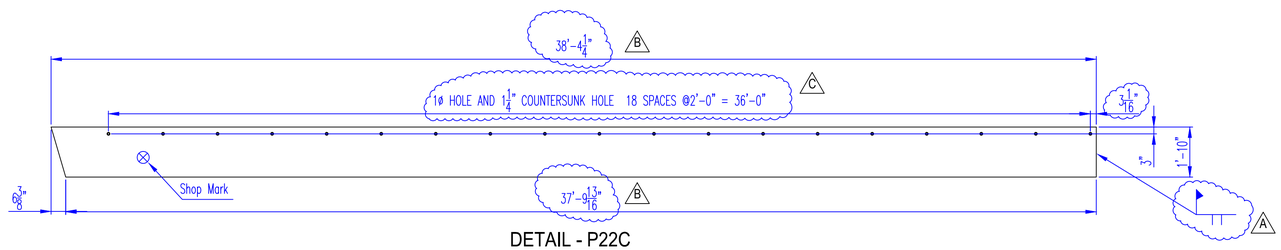

DETAIL - P22C

MATERIAL: 1/2" PL.
QUANTITY: 1 PC.

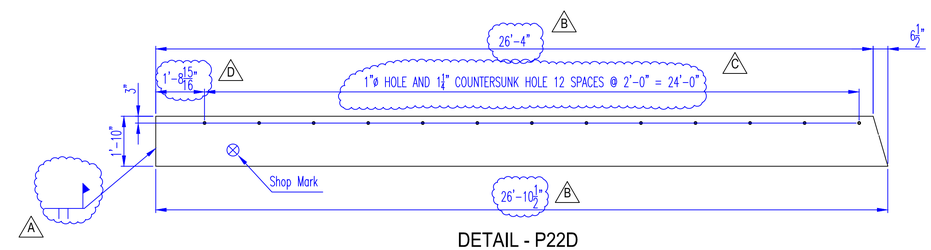

DETAIL - P22D

MATERIAL: 1/2" PL.
QUANTITY: 1 PC.

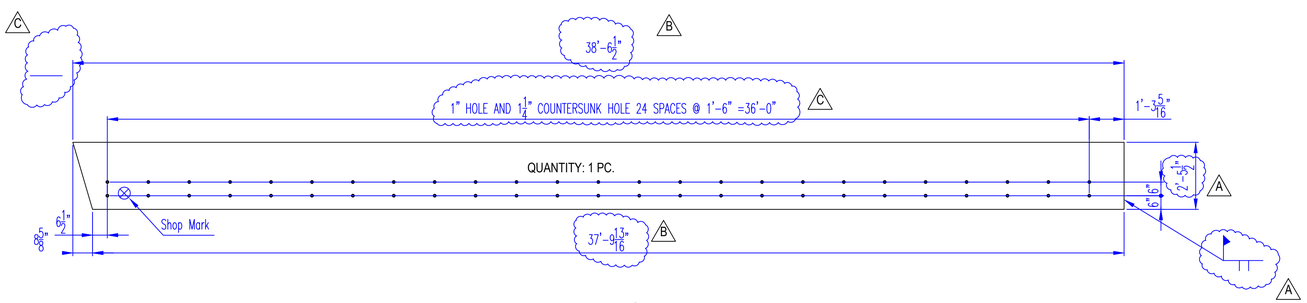

QUANTITY: 1 PC.

DETAIL - P22G

MATERIAL: 1/2" PL.

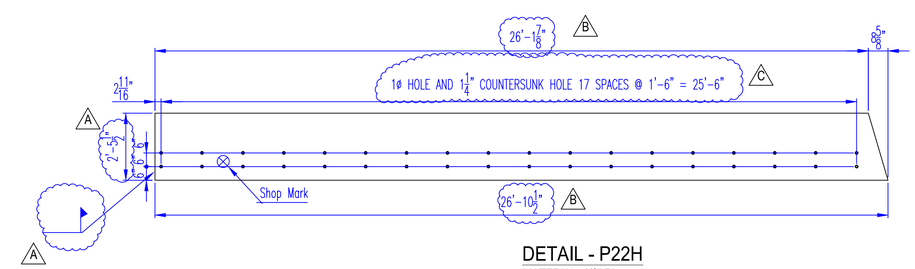

DETAIL - P22H

MATERIAL: 1/2" PL.
QUANTITY: 1 PC.

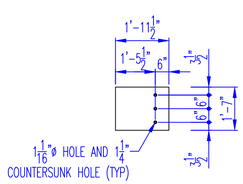

DETAIL - P22J

MATERIAL: 1/2" PL.
QUANTITY: 4 PC.

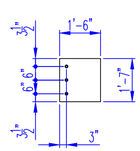

DETAIL - P22K

MATERIAL: 1/2" PL.
QUANTITY: 2 PC.

NOTES:

SEE SHEET E1 FORCOVER PLATE LOCATION PLAN
SEE SHEET 3 FOR HOLE DETAIL, GENERAL NOTES & BILL OF MATERIAL

AISC CERTIFIED FABRICATOR

BRIDGE - INTERMEDIATE (MAJOR)**
FRACTURE CRITICAL ENDORSEMENT
SOPHISTICATED PAINT ENDORSEMENT

REV. No.	REVISION
A	CHANGE WELD TO BUTT WELD 1/15/20
B	CHANGE DIMENSION BY 1/2" 1/17/20
C	CHANGE DIMENSIONS PER CONTRACTOR 4/2/20
D	CHANGE DIMENSION PER REVIEW 4/92/20

SHOP INSPECTED BY:

APPROVAL

KOKOSING CONSTRUCTION

- [x] NO EXCEPTIONS TAKEN
- [ ] MAKE CORRECTIONS AS NOTED
- [ ] REVISE AND RESUBMIT
- [ ] REJECTED
- [ ] FOR INFORMATION ONLY

REVIEW IS FOR GENERAL COMPLIANCE WITH CONTRACT DOCUMENTS
NO RESPONSIBILITY ASSUMED FOR CORRECTNESS OF DIMENSIONS OR DETAILS

BY mwf DATE 5/6/2020

OHIO STRUCTURES INC.
4030 Boardman Canfield Road, Ste. 200 D
Canfield, Ohio 44406
(330) 533-0084 FAX: (330) 533-0191

OHIO DEPARTMENT OF TRANSPORTATION
BRIDGE NO.: CUY - 010 - 2039
NORFORK SOUTHERN RAILROAD OVER OH - 10

SCALE: N.T.S.	KOKOSING CONST. CO. INC.	DRAWN: LF
DATE: 1/20		CHECK: JDC
HORIZONTAL EXTENSION EXPANSION JOINT DETAILS		
REF NO.: 100		ITEM NO.: 516
ODOT PROJ. NO.: 173000	CUYAHOGA COUNTY	DWG. NO.: D1
OSI PROJ. NO.: 19-22	PID NO.: 96833 SFN: 1801519	2 OF 3

* * * EXPANSION JOINTS COVER PLATES - P22A, P22B, PL22C, P22D, P22G & P22H, P22J * * *

MATERIALS ONLY:

LINE	PO#	QTY	MARK	SECTION	LENGTH (FEET)	LENGTH (INCHES)	STL SPEC	PC WT (IN LBS)	NET WT (IN LBS)	HEAT #	REMARK
1											
2		1	P22A	PLATE 1/2 x 29 1/2	38	6 1/2	A709-50	1,916.70	1,916.70		FWD ABUT
3		1	P22B	PLATE 1/2 x 29 1/2	26	10 1/2	A709-50	1,331.12	1,331.12		FWD ABUT
4		1	P22C	PLATE 1/2 x 22	38	4 1/4	A709-50	1,425.93	1,425.93		PIER
5		1	P22D	PLATE 1/2 x 22	26	10 1/2	A709-50	996.16	996.16		PIER
6		1	P22G	PLATE 1/2 x 29 1/2	38	6 1/2	A709-50	1,916.70	1,916.70		REAR ABUT
7		1	P22H	PLATE 1/2 x 29 1/2	26	10 1/2	A709-50	1,331.12	1,331.12		REAR ABUT
8		4	P22J	PLATE 1/2 x 19	1	11 1/2	A709-50	63.31	253.24		BOTH ABUTMENTS
9		2	P22K	PLATE 1/2 x 18	1	7	A709-50	48.50	97.00		
10		* 1		J - 400 STRIP SEAL	67	0					DS BROWN - PIER
11		* 1		GAL OF GLUE							DS BROWN
12											PIER
								SUB TOTAL	**9,267.97**		

HARDWARE ONLY:

LINE		QTY	MARK	DESCRIPTION		STL SPEC	WT PER (IN LBS)	NET WT (IN LBS)	HEAT #	REMARKS
58		204	S1	3/4 x 6 THREADED ANCHOR RODS	Gr. 55	F1554	0.75	153.00		
							SUB TOTAL	**153.00**		
							TOTAL WT	**9,420.97**		

* INDICATES AN ITEM THAT WILL BE SHIPPED LOOSE

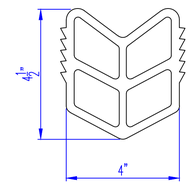

J-400 JOINT SEAL @ PIER

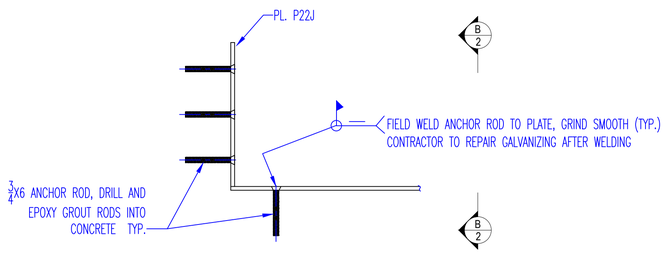

SECTION A 1

GENERAL NOTES:

* ALL MATERIAL SHALL BE ASTM A709 GR50.
* MATERIAL AND WORKMANSHIP SHALL BE IN ACCORDANCE WITH ODOT-CMS-2016.
* WELDING SHALL BE IN ACCORDANCE WITH AWS/AASHTO D1.5-15 AND ODOT 1011.
* ALL MATERIAL TO BE GALVANIZED AFTER FABRICATION IN ACCORDANCE WITH O.D.O.T. 711.02 & TO CONFORM WITH ASTM A123.
* ALL INFORMATION & DIMENSIONS ARE TO BE APPROVED BY THE CONTRACTOR PRIOR TO COMMENCING FABRICATION.

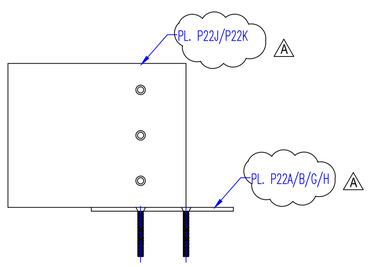

SECTION B 2

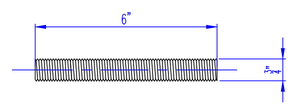

DETAIL - ANCHOR BOLT - S1 (SIMILAR FOR ALL CALLOUTS THROUGHOUT SHOP DRAWINGS)

MATERIAL: 3/4" FULL THREAD
QUANTITY: 165 PC.

NOTES:

SEE SHEET E1 FORCOVER PLATE LOCATION PLAN
SEE SHEET 3 FOR HOLE DETAIL, GENERAL NOTES & BILL OF MATERIAL

AISC CERTIFIED FABRICATOR

BRIDGE - INTERMEDIATE (MAJOR)
FRACTURE CRITICAL ENDORSEMENT
SOPHISTICATED PAINT ENDORSEMENT

REV. No.	REVISION
A	SHOW PLATES FOR PIER AND BOTH ABUTMENTS

SHOP INSPECTED BY:

APPROVAL

KOKOSING CONSTRUCTION

- [x] NO EXCEPTIONS TAKEN
- [ ] MAKE CORRECTIONS AS NOTED
- [ ] REVISE AND RESUBMIT
- [ ] REJECTED
- [ ] FOR INFORMATION ONLY

REVIEW IS FOR GENERAL COMPLIANCE WITH CONTRACT DOCUMENTS
NO RESPONSIBILITY ASSUMED FOR CORRECTNESS OF DIMENSIONS OR DETAILS

BY rmwf DATE 5/6/2020

OHIO STRUCTURES INC.
4030 Boardman Canfield Road, Ste. 200 D
Canfield, Ohio 44406
(330) 533-0084 FAX: (330) 533-0191

OHIO DEPARTMENT OF TRANSPORTATION
BRIDGE NO.: CUY - 010 - 2039
NORFORK SOUTHERN RAILROAD OVER OH - 10

SCALE: N.T.S.	KOKOSING CONST. CO. INC.	DRAWN: LF
DATE: 1/20		CHECK: JDC
DETAILS, GENERAL NOTES, MATERIAL LIST		
REF NO.: 100		ITEM NO.: 516
ODOT PROJ. NO.: 173000	CUYAHOGA COUNTY	DWG. NO.: D2
OSI PROJ. NO.: 19-22	PID NO.: 96833 SFN: 1801519	3 OF 3

Submittal: 074

Revision: 0
Date Submitted: 5/1/2020
Response Due By: N/A

kokosing CONSTRUCTION COMPANY, INC.
886 McKinley Ave.
Columbus, OH 43222
Phone: (614) 228-1029
Fax: (614) 228-7065

Project: 16051 - ODOT 173000 CUY IR 490/SR010 (OC3)
Description: NSRR - Structure Drainage System

To: Julie Meyer, PE
Ohio Department of Transportation - District 12
Email: Julie.Meyer@dot.ohio.gov

From: Oliver Bluestone
Kokosing Construction Company, Inc.
Email: obluestone@kokosing.biz

Submittal Type:	Submitted For:
☐ Engineered Drawings	☐ Approval
☐ Shop Drawings	☒ Record
☐ Working Drawings	☐ Other
☐ CPM Schedule	
☐ Material Certifications / Test Results	**Sent Via:**
☐ Reports	☒ Attached (Electronic)
☒ Product Data/Samples	☐ Attached (Hard Copy)
☐ Other:	

Submittal #	Copies	Spec #	Rev. #	Description	Status
074	1	518	0	074 – NSRR - Structure Drainage System	For Record

Comments:

Please see the attached product data for the NSRR structure drainage system (BU22). Please note this submittal is for record only.

Please feel free to contact me with any questions/concerns regarding this submittal.

Signed: _____

SUBMITTAL

THE PROFESSIONAL'S SOURCE • FERGUSON ®

FERGUSON®
Waterworks

SUBMITTAL

JOB NAME: MJ BRIDGE DRAINAGE

JOB SITE: CLEVELAND, OH

ASSOCIATE: KEITH STRAHLER

CUSTOMER: KOKOSING CONSTRUCTION

DATE: 5/1/20

FERGUSON WATERWORKS
3845 Groveport Rd.
Columbus, OH 43207

P: (614) 497-2323
F: (614) 497-1614

AMERICAN Ductile Iron Pipe

ANSI/AWWA C150/A21.50
and
ANSI/AWWA C151/A21.51
Nominal Wall Thicknesses for Special Thickness Classes

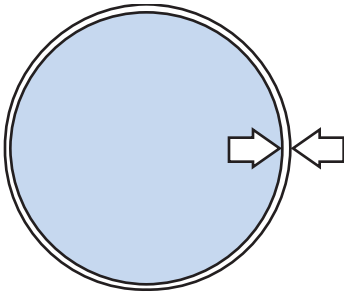

Table No. 3-12

Size in.	Outside Diameter in.	SPECIAL THICKNESS CLASSES—Wall Thickness in Inches*						
		50	51	52	53	54	55	56
4	4.80	-	.26	.29	.32	.35	.38	.41
6	6.90	.25	.28	.31	.34	.37	.40	.43
8	9.05	.27	.30	.33	.36	.39	.42	.45
10	11.10	.29	.32	.35	.38	.41	.44	.47
12	13.20	.31	.34	.37	.40	.43	.46	.49
14	15.30	.33	.36	.39	.42	.45	.48	.51
16	17.40	.34	.37	.40	.43	.46	.49	.52
18	19.50	.35	.38	.41	.44	.47	.50	.53
20	21.60	.36	.39	.42	.45	.48	.51	.54
24	25.80	.38	.41	.44	.47	.50	.53	.56
30	32.00	.39	.43	.47	.51	.55	.59	.63
36	38.30	.43	.48	.53	.58	.63	.68	.73
42	44.50	.47	.53	.59	.65	.71	.77	.83
48	50.80	.51	.58	.65	.72	.79	.86	.93
54	57.56	.57	.65	.73	.81	.89	.97	1.05

*These are Special Thickness Classes as shown in AWWA C150 and C151. They were previously designated standard thickness classes. AMERICAN can furnish any thickness in between these Special Thicknesses if deemed economical for major projects.

Special classes are most appropriately used for some threaded, grooved, or ball and socket pipes or for extraordinary design conditions, and they are generally less available than standard pressure class pipe.

For pressure rating and maximum depth of cover capabilities of Special Thickness Classes, check AMERICAN. These capabilities can be estimated by comparing metal thickness and capabilities of those of Pressure Classes in Table No. 3-11, or may be calculated by using the design formulas shown in AWWA C150.

AMERICAN Ductile Iron Fastite® Joint and Mechanical Joint Pipe
ANSI/AWWA C151/A21.51
Wall Thickness and Weights for Special Thickness Classes

Table No. 3-13

Size in.	Thickness Class	Wall Thickness in.	Weight in Pounds				
				Fastite Joint		Mechanical Joint*	
			Per Foot Plain End	Per Foot inc. Bell	Per 20' Nominal Length	Per Foot inc. Bell	Per 20' Nominal Length
4	51	.26	11.3	11.8	235	-	-
	52	.29	12.6	13.1	265	-	-
	53	.32	13.8	14.3	285	14.5	290
	54	.35	15.0	15.5	310	-	-
	55	.38	16.1	16.6	335	-	-
	56	.41	17.3	17.8	355	-	-
6	50	.25	16.0	16.7	335	-	-
	51	.28	17.8	18.5	370	-	-
	52	.31	19.6	20.3	410	-	-
	53	.34	21.4	22.1	445	22.3	450
	54	.37	23.2	23.9	480	-	-
	55	.40	25.0	25.7	515	-	-
	56	.43	26.7	27.4	550	-	-
8	50	.27	22.8	23.8	480	-	-
	51	.30	25.2	26.2	525	-	-
	52	.33	27.7	28.7	575	-	-
	53	.36	30.1	31.1	625	31.3	630
	54	.39	32.5	33.5	675	-	-
	55	.42	34.8	35.8	720	-	-
	56	.45	37.2	38.3	770	-	-
10	50	.29	30.1	31.4	630	-	-
	51	.32	33.2	34.5	695	-	-
	52	.35	36.2	37.5	755	-	-
	53	.38	39.2	40.5	815	40.7	820
	54	.41	42.1	43.5	875	-	-
	55	.44	45.1	46.5	935	-	-
	56	.47	48.0	49.3	990	-	-
12	50	.31	38.4	40.0	805	-	-
	51	.34	42.0	43.6	875	-	-
	52	.37	45.6	47.2	950	-	-
	53	.40	49.2	50.8	1020	51.1	1030
	54	.43	52.8	54.3	1090	-	-
	55	.46	56.3	57.9	1165	-	-
	56	.49	59.9	61.5	1235	-	-
14	50	.33	47.5	50.3	1010	-	-
	51	.36	51.7	54.6	1095	-	-
	52	.39	55.9	58.7	1175	-	-
	53	.42	60.1	62.9	1260	-	-
	54	.45	64.2	67.0	1345	-	-
	55	.48	68.4	71.3	1430	-	-
	56	.51	72.5	75.3	1510	-	-
16	50	.34	55.8	59.0	1180	-	-
	51	.37	60.6	63.8	1280	-	-
	52	.40	65.4	68.6	1375	-	-
	53	.43	70.1	73.3	1470	-	-
	54	.46	74.9	78.1	1565	-	-
	55	.49	79.7	82.9	1660	-	-
	56	.52	84.4	87.6	1755	-	-
18	50	.35	64.4	68.0	1365	-	-
	51	.38	69.8	73.4	1470	-	-
	52	.41	75.2	78.8	1580	-	-
	53	.44	80.6	84.2	1690	-	-
	54	.47	86.0	89.6	1795	-	-
	55	.50	91.3	95.0	1905	-	-
	56	.53	96.7	100.3	2010	-	-

*Mechanical Joint Pipe is available in 4"-12" diameters and Special Thickness Class 53 only.

AMERICAN Fastite® Joint Pipe

For Water, Sewage or Other Liquids

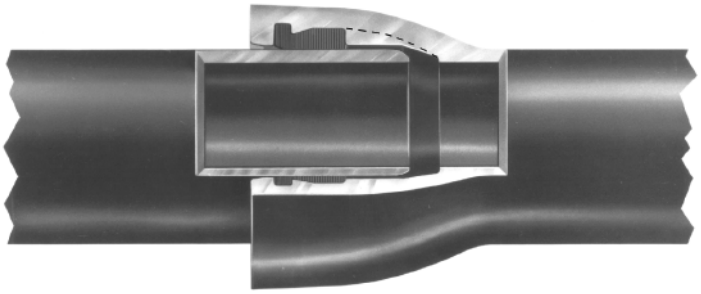

AMERICAN Fastite Joint Pipe in sizes 4"-64" for water, sewage or other liquids has the proven long-life and high-strength qualities inherent in pipe produced centrifugally in accordance with AWWA C151. In addition, this significant AMERICAN development, a dependable, single gasket, push-on type joint meeting the requirements of AWWA C111, affords the customer lower joint cost and time-saving advantages in installation. It provides exceptional strength and flexibility and has been widely accepted by engineers, contractors and utility officials since the 1950s. For added flexibility during construction, and for possible elimination of bends, a liberal 5° allowable deflection is standard in all sizes through 30", offering 21" offset in a 20' length of pipe. Liberal deflection can also be provided in larger diameter pipe with standard and Special Fastite Deflection Bells.

The patented AMERICAN Fastite Joint embodies many advanced design features and is rated for a water working pressure of 350 psi. For specific conditions, ductile iron piping with this joint has been approved for much higher pressure conditions. The socket, which is scientifically designed with two gasket recesses and a dividing buttress, is manufactured to close tolerances so that the gasket is self-centered, securely confined, and firmly compressed for a permanent, tight, trouble-free joint. The Fastite joint seal, bubble-tight under vacuum and external pressure, becomes even tighter with the application of internal pressure due to a specially designed wedging surface in the socket.

Fastite Joint Assembly

The bell opening is slightly tapered to provide easy entry of the pipe end; the flared socket design permits liberal joint deflection. The plain end of the pipe is tapered or rounded to facilitate entry into the bell and self-centering in the gasket. On pipe cut in the field, the plain end can be easily beveled and smoothed by the use of a portable grinding wheel or other suitable apparatus. Methods of cutting ductile iron pipe are described in Section 3.

A stripe is painted on the plain end of AMERICAN Fastite Joint Pipe to provide a visual means of checking the joint alignment and to assure proper insertion. See page 2-10 for detailed assembly instructions.

Fastite Gasket

The Fastite Joint sealing component—a molded synthetic rubber ring gasket of two hardnesses, shaped to fit the configuration of the gasket socket—is manufactured per all requirements of ANSI/AWWA C111/A21.11 and under AMERICAN's own rigid specifications, assuring closely controlled dimensional and hardness properties. The smaller end of the gasket is of harder rubber, approximately 85 durometer hardness, which provides a strong shoulder for self-centering on the gasket buttress, a permanent seal against cold flow, and protection from deterioration. The larger end of the gasket is of softer rubber, approximately 65 durometer hardness, providing ease of assembly and positive sealing. The design assures effective sealing at low or high pressures and in straight or deflected joint alignment. It also eliminates any concerns of infiltration or root intrusion, and assures positive sealing against negative pressure, thus preventing gasket "pullout" should a vacuum be created in the line.

A taper on the inside of the gasket allows the entering pipe to locate and center on the hard section and reduces friction loads during

subsequent assembly. The snug fit and the hard section of the gasket, in conjunction with the design of the buttress, act to restrain the gasket against dislodgment during assembly. Additional internal pressure results in increased tightness of the seal when pipe is either in straight alignment or deflected.

Gaskets made of SBR (Styrene Butadiene Rubber) are standard. For information on gaskets made of special types of rubber, for applications involving air or liquid temperatures in excess of 150°F, or for chemical, hydrocarbon or other special service applications, and for installations in contaminated soils where permeation through gaskets might be a concern, consult AMERICAN for recommendations. See Table 2-1.

Fastite Lubricant

AMERICAN Fastite Joint Lubricant is a non-toxic water soluble material imparting neither taste nor odor to the conveyed water and is ANSI/NSF 61 approved. The lubricant is suitable for use in hot or cold weather and will adhere to wet or dry pipe. AMERICAN Fastite Joint Pipe can be assembled when submerged, though for such installation, special AMERICAN underwater joint lubricant is recommended. See Table No. 2-5 for appropriate lubricant quantities.

Fastite Joint Materials

Standard joint materials include Fastite plain rubber gaskets and a sufficient supply of Fastite joint lubricant. Fastite pipes are most often readily joined with available excavating equipment; however, assembly tools can be supplied by AMERICAN on a loan basis with a nominal deposit which is refundable upon return of tools in good condition.

Fittings

AMERICAN Fastite fittings in all sizes and AMERICAN 4"-48" Mechanical Joint Fittings are used with Fastite Joint pipe. See Sections 4 and 5.

Coating and Lining

AMERICAN Fastite Joint Pipe can be furnished asphaltic coated, cement lined, or with special coating or lining where required. See Section 11.

Fastite Gaskets

Table No. 2-1

Common Name or Trade Name*	Chemical Name	Temperature Capability**	Common Uses
Plain Rubber	Styrene Butadiene Copolymer(SBR)	150°F	Fresh Water, Salt Water, Sanitary Sewage
Plain Rubber (conductive)	Styrene Butadiene Copolymer(SBR)	150°F	Electrical continuity for thawing of Service Water and Sewage
EPDM	Ethylene Propylene Diene Monomer	250°F	Water, Sewage, Ketones, Dilute Acids and Alkalies, Vegetable Oil, Alcohols, Air
Neoprene	Polychloroprene(CR)	200°F	Fresh Water, Sewage
Nitrile Buna-N	Acrylonitrile Butadiene(NBR)	150°F	Non-Aromatic Hydrocarbons, Petroleum Oil, Hydraulic Fluids, Fuel Oil, Fats, Oil, Grease†
Fluoroelastomer Fluorel Viton®***	FKM	300°F	Aromatic Hydrocarbons, Gasoline, Refined Petroleum Products, most Chemicals and Solvents, High Temp., Air (Least permeable of all available Fastite gasket rubbers)

*AMERICAN reserves the right to furnish any Trade or Brand rubber for the chemical formulation specified.
**Temperature is in reference to conveyed fluid.
***Viton® is a registered trademark of DuPont Dow Elastomers.
Refer to Section 11 for temperature and service capabilities of pipe linings.
Refer higher temperatures or other special requirements to AMERICAN for recommendations regarding suitable gasket material.
†This gasket rubber is chemically resistant in the non-potable water uses shown but is not as resistant to permeation in potable water applications as FKM.
All Fastite gaskets made from the materials in the above table are suitable for use with water containing normal concentrations of chloramine. Where increased resistance to chloramine is desired, neoprene or fluoroelastomer materials should be considered.

AMERICAN Fastite® Joint for Ductile Iron Pipe

ANSI/AWWA C111/A21.11

Standard Dimensions

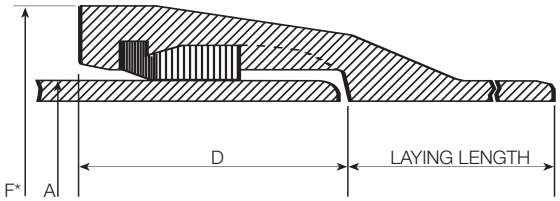

Table No. 2-2

Size in.	Nominal Laying Length ft.	Dimensions in Inches		
		A Outside Diameter	D Depth of Socket	F* Bell O.D.
4	20	4.80	3.31	6.40
6	20	6.90	3.38	8.60
8	20	9.05	3.75	11.16
10	20	11.10	3.75	13.25
12	20	13.20	3.75	15.22
14	20	15.30	5.23	17.73
16	20	17.40	5.23	19.86
18	20	19.50	5.50	22.16
20	20	21.60	5.50	24.28
24	20	25.80	5.50	28.50
30	20	32.00	6.50	34.95
36	20	38.30	6.50	41.37
42	20	44.50	7.50	48.27
48	20	50.80	8.00	54.71
54	20	57.56	8.50	61.65
60	20	61.61	8.75	65.80
64	20	65.67	9.00	70.04

*Dimensions subject to change at our option. Check AMERICAN if exact dimensions required.
See Section 3 for additional information on ductile iron pipe.
See Sections 4 and 7 for information on Fastite fittings.

AMERICAN Fastite® Joint Pipe

Allowable Joint Deflection

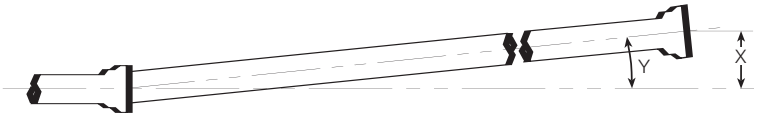

Table No. 2-3

Size in.	Nominal Laying Length ft.	Maximum Recommended Deflection†					
		Standard Bell			Special Deflection Bell		
		X Offset per 20' Length in.	Y Deflection Angle	Radius of Curve* ft.	X Offset per 20' Length in.	Y Deflection Angle	Radius of Curve* ft.
4	20	21	5°	230	-	-	-
6	20	21	5°	230	-	-	-
8	20	21	5°	230	-	-	-
10	20	21	5°	230	-	-	-
12	20	21	5°	230	-	-	-
14	20	21	5°	230	-	-	-
16	20	21	5°	230	-	-	-
18	20	21	5°	230	-	-	-
20	20	21	5°	230	-	-	-
24	20	21	5°	230	-	-	-
30	20	21	5°	230	-	-	-
36	20	17	4°	285	21	5°	230
42	20	12	3°	380	21	5°	230
48	20	12	3°	380	17	4°	285
54	20	12	3°	380	17	4°	285
60	20	12	3°	380	17	4°	285
64	20	12	3°	380	17	4°	285

*Approximate radius of curve produced by a succession of 20' lengths of pipe fully deflected.
†Special Deflection Bells must be specifically ordered and will be marked with white bell face for easy identification.
For easiest assembly, the joints should be assembled with the pipe in reasonably straight alignment. After joint assembly, the pipe may be deflected up to the maximum shown above. Offset distances are based on 20' lengths.

Maximum Allowable Separation

Table No. 2-4

Size in.	S Separation in.
4	3/8
6	9/16
8	3/4
10	15/16
12	1 1/8
14	1 5/16
16	1 1/2
18	1 5/8
20	1 7/8
24	2 1/4
30	2 3/4
36	2 5/8
42	2 1/4
48	2 1/2
54	2 7/8
60	3 1/8
64	3 3/8

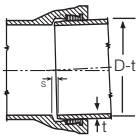

Maximum Allowable Separation, "S", in Standard Bell pipe is approximately equal to the median pipe diameter in inches times the sine of the deflection angle. This is provided for information only and should not be used to determine precise joint deflection.

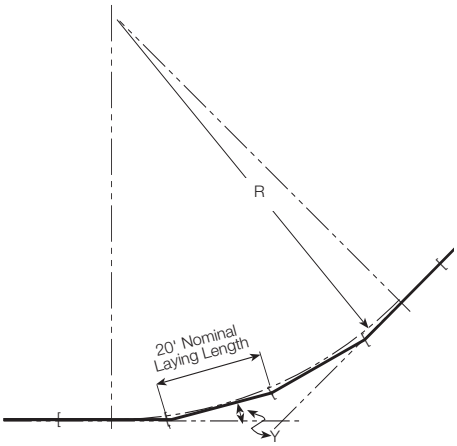

R = Radius of Curve (ft.)

Y = Deflection Angle (degrees)

$$\text{Radius of Curve} = \frac{\text{Nominal Laying Length}}{2 \times \text{Tangent } (Y \div 2)}$$

Tyler/Union

MECHANICAL JOINT C153 DUCTILE IRON COMPACT FITTINGS

Sizes 3" thru 12" UL Listed For Fire Main Equipment

SAMPLE SPECIFICATIONS

Mechanical Joint watermain fittings with accessories, 2" through 36" shall be produced in the USA of Ductile Iron in accordance with and meet all applicable terms and provisions of standards ANSI/AWWA C153/A21.53 ANSI/AWWA C111/A21.11 (current revisions). Ductile Iron Mechanical Joint Fittings 3" through 24" shall be rated for 350 PSI working pressure. 30" through 36" shall be rated for 250 psi working pressure

NOTE - EXCEPTIONS: Mechanical Joint Fittings with flanged branches are rated for water pressure of 250 PSI.

NOTE: Fittings are CEMENT LINED and seal coated in accordance with ANSI/AWWA C104/A21.4; also available double cement-lined, bare or epoxy coated.

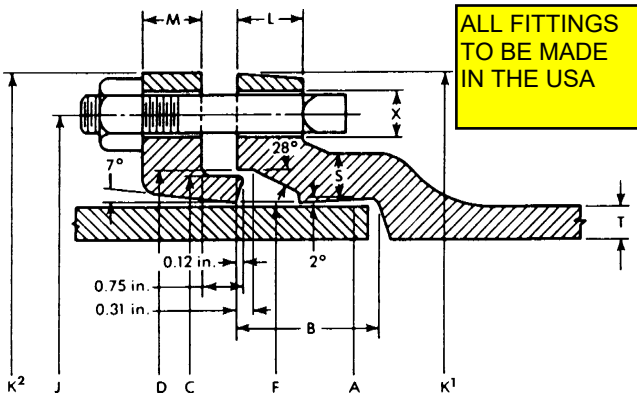

ALL FITTINGS TO BE MADE IN THE USA

	JOINT DIMENSIONS IN INCHES													BOLTS	
Size	**A Dia.**	**B**	**C Dia.**	**D Dia.**	**F Dia.**	**J Dia.**	**K¹ Dia.**	**K² Dia.**	**L**	**M**	**S**	**T**	**X**	**Size**	**No.**
3	3.96	2.50	4.84	4.94	4.06	6.19	7.62	7.69	.58	.62	.39	.33	3	5/8x3	4
4	**4.80**	**2.50**	**5.92**	**6.02**	**4.90**	**7.50**	**9.06**	**9.12**	**.60**	**.75**	**.39**	**.34**	**7/8**	**3/4x3 1/2**	**4**
6	6.90	2.50	8.02	8.12	7.00	9.50	11.06	11.12	.63	.88	.43	.36	7/8	3/4x3 1/2	6
8	**9.05**	**2.50**	**10.17**	**10.27**	**9.15**	**11.75**	**13.31**	**13.37**	**.66**	**1.00**	**.45**	**.38**	**7/8**	**3/4x3 1/2**	**6**
10	11.10	2.50	12.22	12.34	11.20	14.00	15.62	15.62	.70	1.00	.47	.40	7/8	3/4x3 1/2	8
12	**13.20**	**2.50**	**14.32**	**14.44**	**13.30**	**16.25**	**17.88**	**17.88**	**.73**	**1.00**	**.49**	**.42**	**7/8**	**3/4x3 1/2**	**8**
14	15.30	3.50	16.40	16.54	15.44	18.75	20.31	20.25	.79	1.25	.56	.47	7/8	3/4x4	10
16	**17.40**	**3.50**	**18.50**	**18.64**	**17.54**	**21.00**	**22.56**	**22.50**	**.85**	**1.31**	**.57**	**.50**	**7/8**	**3/4x4**	**12**
18	19.50	3.50	20.60	20.74	19.64	23.25	24.83	24.75	1.00	1.38	.68	.54	7/8	3/4x4	12
20	**21.60**	**3.50**	**22.70**	**22.84**	**21.74**	**25.50**	**27.08**	**27.08**	**1.02**	**1.44**	**.69**	**.57**	**7/8**	**3/4x4**	**14**
24	25.80	3.50	26.90	27.04	25.94	30.00	31.58	31.50	1.02	1.56	.75	.61	7/8	3/4x4 1/2	16
30	**32.00**	**4.00**	**33.29**	**33.46**	**32.17**	**36.88**	**39.12**	**39.12**	**1.31**	**2.00**	**.82**	**.66**	**1 1/8**	**1x5 1/2**	**20**
36	38.30	4.00	39.59	39.76	38.47	43.75	46.00	46.00	1.45	2.00	1.00	.74	1 1/8	1x5 1/2	24

BENDS

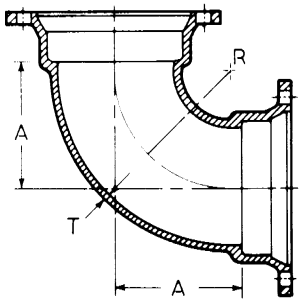

90° Bends (1/4)

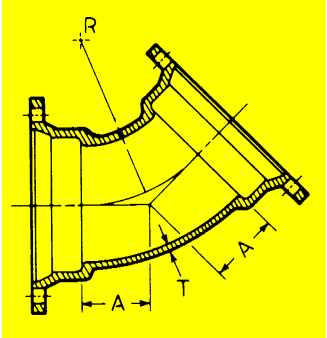

45° Bends (1/8)

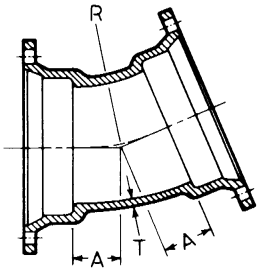

22 1/2° Bends (1/16)

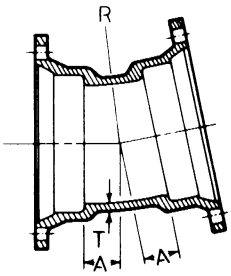

11 1/4° (1/32)

	Dimensions				Dimensions			Dimensions			Dimensions		
Size	**T**	**A**	**R**	**Weight**	**A**	**R**	**Weight**	**A**	**R**	**Weight**	**A**	**R**	**Weight**
3	.34	4.5	4.0	19	2.00	3.62	17	1.50	4.98	15	1.25	7.62	16
4	**.35**	**5.0**	**4.5**	**26**	**2.49**	**4.81**	**22**	**1.82**	**6.66**	**20**	**1.55**	**10.70**	**20**
6	.37	6.5	6.0	49	3.50	7.25	39	2.59	10.50	31	1.81	13.26	29
8	**.39**	**7.5**	**7.0**	**64**	**4.00**	**8.44**	**56**	**2.85**	**11.80**	**50**	**2.06**	**15.80**	**45**
10	.41	9.5	9.0	102	5.01	10.88	78	3.35	14.35	66	2.32	18.36	59
12	**.43**	**10.5**	**10.0**	**129**	**5.98**	**13.25**	**102**	**3.86**	**16.90**	**87**	**2.56**	**20.90**	**82**
14	.51	12.0	11.5	214	5.50	12.06	155	3.93	17.25	142	2.59	21.25	136
16	**.52**	**13.0**	**12.5**	**273**	**5.98**	**13.25**	**204**	**3.98**	**17.50**	**178**	**2.62**	**21.50**	**157**
18	.59	15.5	14.0	411	7.50	14.50	292	7.50	30.19	286	7.50	60.94	283
20	**.60**	**17.0**	**15.5**	**519**	**8.00**	**16.88**	**372**	**8.50**	**35.19**	**376**	**8.50**	**71.07**	**374**
24	.62	20.0	18.5	721	9.00	18.12	490	9.00	37.69	512	9.00	76.12	487
30	*** (Available Soon see List Prices)**				*** (Available Soon see List Prices)**			*** (Available Soon see List Prices)**			*** (Available Soon see List Prices)**		
36	* (Available Soon see List Prices)				*** (Available Soon see List Prices)**			*** (Available Soon see List Prices)**			*** (Available Soon see List Prices)**		

Tyler/Union

MECHANICAL JOINT C153 DUCTILE IRON COMPACT FITTINGS

Sizes 3" thru 12" UL Listed For Fire Main Equipment

BENDS

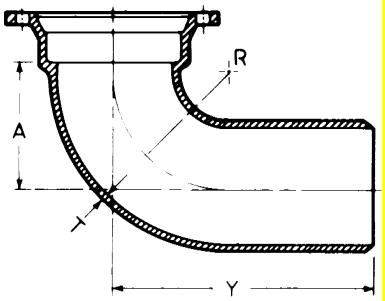

90° Bend MJ x PE (1/4)

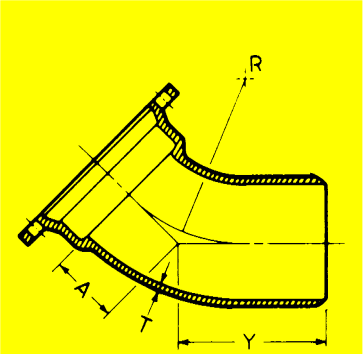

45° Bend MJ x PE (1/8)

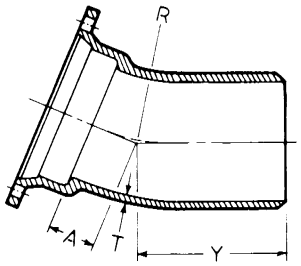

22¹/₂° Bend MJ x PE (1/16)

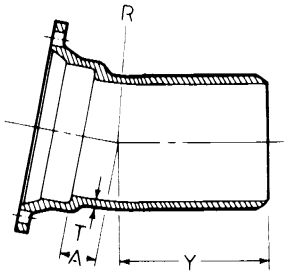

11¹/₄° Bend MJ x PE (1/32)

	Dimensions					Dimensions				Dimensions				Dimensions			
Size	T	A	Y	R	Weight	A	Y	R	Weight	A	Y	R	Weight	A	Y	R	Weight
3	.34	4.5	10.0	4.0	18	2.0	7.5	3.62	17	1.50	7.00	4.98	19	1.25	6.75	7.62	15
4	**.35**	**5.0**	**10.5**	**4.5**	**26**	**2.5**	**8.0**	**4.81**	**22**	**1.82**	**7.32**	**6.66**	**20**	**1.55**	**7.05**	**10.70**	**20**
6	.37	6.5	12.0	6.0	45	3.5	9.0	7.25	38	2.58	8.08	13.50	33	1.80	7.30	13.26	32
8	**.39**	**7.5**	**13.0**	**7.0**	**64**	**4.0**	**9.5**	**8.44**	**55**	**2.84**	**8.34**	**11.80**	**51**	**2.05**	**7.55**	**15.80**	**44**
10	.41	9.5	15.0	9.0	108	5.0	10.5	10.88	78	3.35	8.85	14.35	66	2.31	7.81	18.36	60
12	**.43**	**10.5**	**16.0**	**10.0**	**114**	**6.0**	**11.5**	**13.25**	**104**	**3.86**	**9.36**	**16.90**	**89**	**2.56**	**8.06**	**20.90**	**79**
14	.51	12.0	20.0	11.5	219	5.5	13.5	12.06	165	3.93	11.93	17.25	152	2.59	10.59	21.25	137
16	**.52**	**13.0**	**21.0**	**12.5**	**254**	**6.0**	**14.0**	**13.25**	**206**	**3.98**	**11.98**	**17.50**	**181**	**2.62**	**10.62**	**21.50**	**161**
24	.62	17.0	25.0	15.58	710	7.5	16.2	14.69	460	9.00	17.00	37.69	455	9.00	17.00	76.12	475
30	* (Available Soon see List Prices)					* (Available Soon see List Prices)				* (Available Soon see List Prices)				* (Available Soon see List Prices)			

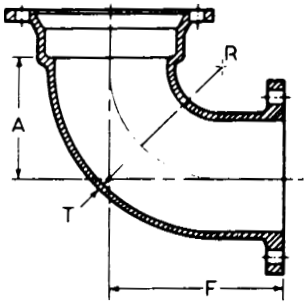

90° Bend MJ x Flange (1/4)

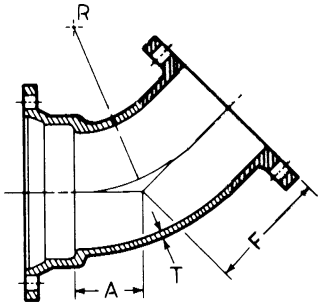

45° Bend MJ x Flange (1/8)

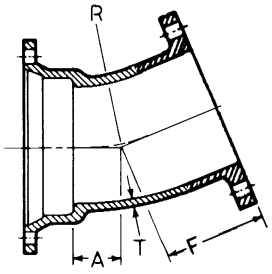

22¹/₂° Bend MJ x Flange (1/16)

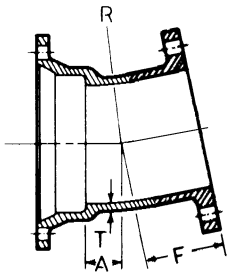

11¹/₄° Bend MJ x Flange (1/32)

	Dimensions					Dimensions				Dimensions				Dimensions			
Size	T	A	R	F	Weight	A	R	F	Weight	A	R	F	Weight	A	R	F	Weight
3	.34	4.5	4.0	5.5	21	...	...	..	..	...	...	..	..	...	...	..	..
4	**.35**	**5.0**	**4.5**	**6.5**	**28**	**2.50**	**3.56**	**4.0**	**34**	**1.75**	**3.81**	**4.0**	**34**	**1.50**	**5.12**	**4.0**	**19**
6	.37	6.5	6.0	8.0	45	3.25	5.49	5.0	57	2.25	6.35	5.0	57	1.50	5.12	5.0	30
8	**.39**	**7.5**	**7.0**	**9.0**	**73**	**4.25**	**7.93**	**5.5**	**83**	**2.50**	**7.62**	**5.5**	**83**	**1.75**	**7.70**	**5.5**	**50**
10	.41	9.5	9.0	11.0	113	5.00	9.76	6.5	122	3.00	10.16	6.5	122	2.00	10.25	6.5	75
12	**.43**	**10.5**	**10.0**	**12.0**	**141**	**6.00**	**12.19**	**7.5**	**159**	**3.50**	**12.70**	**7.5**	**159**	**2.25**	**12.82**	**7.5**	**88**
14	.51	12.0	11.5	14.0	217	5.50	10.85	8.5	207								
16	**.52**	**13.0**	**12.5**	**15.0**	**280**	**6.00**	**12.02**	**9.5**	**290**								

90° Swivel x Swivel Hydrant Ell

	Dimensions								
Size	T	A	B	C	D	E	F	R	*Weight
6	.37	10.5	15.5	6.90	11.2	6.81	7.98	6.0	74

*** Weight includes two swivel glands.**

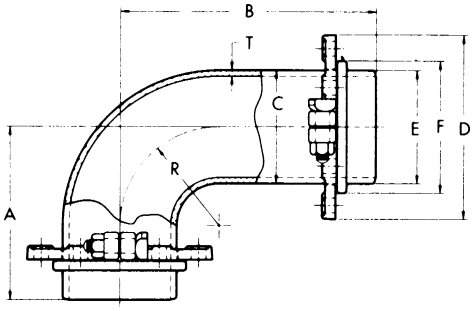

Tyler/Union

MECHANICAL JOINT C153 DUCTILE IRON COMPACT FITTINGS

Sizes 3" thru 12" UL Listed For Fire Main Equipment

TEES **CROSS**

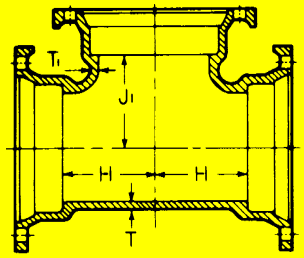

MJ Tee

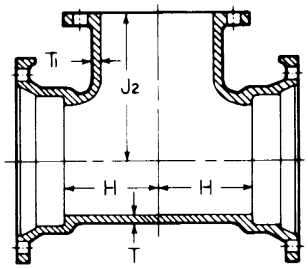

MJ x FE Tee

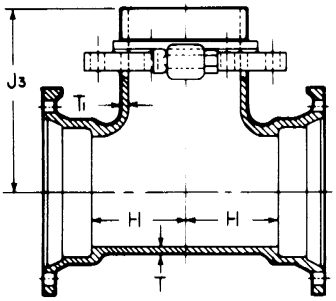

MJ x Swivel Tee

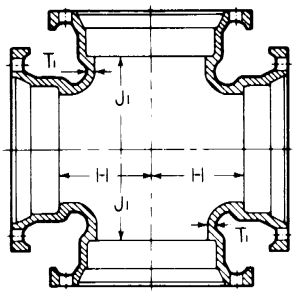

Cross

Size	T	T[1]	H	J[1]	J[2]	J[3]	MJ	MJxFE	MJxS†	Cross
			Dimensions				Weights			
3	.34	.34	3.5	3.50	5.5	...	26	29	...	31
4x3	**.35**	**.34**	**3.5**	**4.00**	**6.5**	**...**	**35**	**34**	**...**	**39**
4	.35	.35	4.0	4.00	6.5	...	36	39	...	45
6x3	**.37**	**.34**	**3.5**	**5.00**	**8.0**	**...**	**51**	**54**	**...**	**...**
6x4	.37	.35	4.0	5.00	8.0	...	52	57	...	62
6	**.37**	**.37**	**5.0**	**5.00**	**8.0**	**10.50**	**66**	**68**	**77**	**79**
8x3	.39	.34	4.0	6.50	9.0	...	56	...	...	...
8x4	**.39**	**.35**	**4.5**	**6.50**	**9.0**	**...**	**72**	**82**	**...**	**84**
8x6	.39	.37	5.5	6.50	9.0	11.50	79	81	105	98
8	**.39**	**.39**	**6.5**	**6.50**	**9.0**	**11.50**	**90**	**101**	**116**	**112**
10x3	.41	.34	4.0	7.50	11.0	...	80	...	...	...
10x4	**.41**	**.35**	**4.5**	**7.50**	**11.0**	**...**	**82**	**92**	**...**	**98**
10x6	.41	.37	5.5	7.50	11.0	13.00	99	116	114	121
10x8	**.41**	**.39**	**6.5**	**7.50**	**11.0**	**13.00**	**116**	**128**	**138**	**135**
10	.41	.41	7.5	7.50	11.0	...	132	144	...	156
12x3	**.43**	**.34**	**4.0**	**8.75**	**12.0**	**...**	**99**	**...**	**...**	**...**
12x4	.43	.35	4.5	8.75	12.0	...	108	118	...	119
12x6	**.43**	**.37**	**5.5**	**8.75**	**12.0**	**14.25**	**119**	**133**	**132**	**138**
12x8	.43	.39	6.5	8.75	12.0	14.25	126	146	149	149
12x10	**.43**	**.41**	**7.5**	**8.75**	**12.0**	**...**	**159**	**174**	**...**	**187**
12	.43	.43	8.75	8.75	12.0	...	171	198	...	202
14x6	**.51**	**.44**	**6.5**	**10.50**	**14.0**	**16.00**	**183**	**205**	**211**	**210**
14x8	.51	.45	7.5	10.50	14.0	...	211	...	...	231
14x10	**.51**	**.46**	**8.5**	**10.50**	**14.0**	**...**	**229**	**244**	**...**	**255**
14x12	.51	.47	9.5	10.50	14.0	...	245	284	...	269
14	**.51**	**.51**	**10.5**	**10.50**	**14.0**	**...**	**281**	**291**	**...**	**299**
16x6	.52	.45	6.5	11.50	15.0	17.00	222	230	243	250
16x8	**.52**	**.46**	**7.5**	**11.50**	**15.0**	**...**	**245**	**248**	**...**	**264**
16x10	.52	.47	8.5	11.50	15.0	...	265	287	...	286
16x12	**.52**	**.48**	**9.5**	**11.50**	**15.0**	**...**	**277**	**312**	**...**	**312**
16x14	.52	.51	10.5	11.50	15.0	...	317	348	...	...
16	**.52**	**.52**	**11.5**	**11.50**	**15.0**	**...**	**337**	**324**	**...**	**457**

† Weights include swivel gland

Tyler/Union

MECHANICAL JOINT C153 DUCTILE IRON COMPACT FITTINGS

Sizes 3" thru 12" UL Listed For Fire Main Equipment

WYES

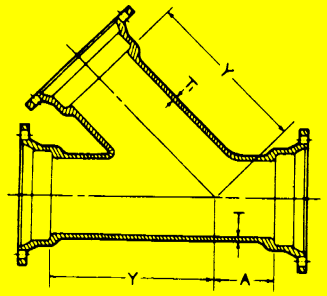

***Wyes**

Size	Dimensions A	Y	T	T¹	Weights
3	2.0	8.5	.34	.34	36
4x3	**1.0**	**9.0**	**.35**	**.34**	**39**
4	2.5	9.5	.35	.35	45
6x4	**1.5**	**11.0**	**.37**	**.35**	**67**
6	3.0	13.0	.37	.37	85
8x4	0.5	13.0	.39	.35	86
8x6	2.0	14.5	.39	.37	109
8	**3.5**	**16.0**	**.39**	**.39**	**117**
10x4	0.0	15.0	.41	.35	112
10x6	**1.0**	**16.0**	**.41**	**.37**	**129**
10x8	2.5	17.0	.41	.39	162
10	**3.5**	**19.0**	**.41**	**.41**	**199**
12x4	0.0	16.5	.43	.35	141
12x6	**1.5**	**18.5**	**.43**	**.37**	**170**
12x8	1.5	18.5	.43	.39	177
12x10	**3.0**	**20.0**	**.43**	**.41**	**216**
12	4.5	22.5	.43	.43	269
†14	**6.0**	**25.0**	**.51**	**.51**	**476**
16x6	0.0	21.0	.52	.45	300
16x8	**0.5**	**22.5**	**.52**	**.46**	**349**
†16x12	3.5	25.0	.52	.48	471
†16	**6.5**	**28.0**	**.52**	**.52**	**635**

*** Not included in AWWA C153.**

† Rated at 250 psi.

MJ x FE Flange Dimensions are on Page 1.

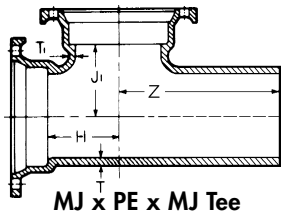

MJ x PE x MJ Tee

Size	Dimensions T	T¹	H	J¹	Z	Weights
6	.37	.37	5.0	5.0	11.5	57
8x6	**.39**	**.37**	**5.5**	**6.5**	**11.5**	**79**
8	.39	.39	6.5	6.5	12.5	83
10	**.41**	**.41**	**7.5**	**7.5**	**13.0**	**133**

REDUCERS

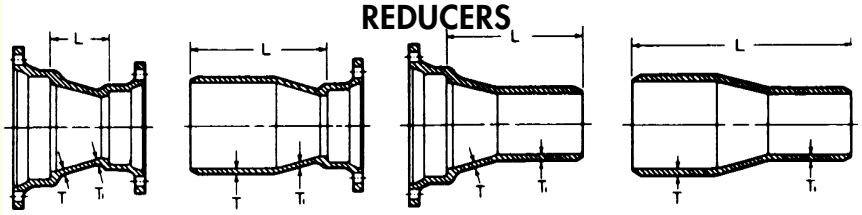

MJ x MJ | **MJSEBxPE** | **MJLEBxPE** | **PE x PE**

Size	Dimensions T	T¹	MJ L	SEB L	LEB L	PE L	Weights MJ	SEB	LEB	PE
4x3	.35	.34	4.0	9.5	9.5	15.0	18	17	17	18
6x3	**.37**	**.34**	**5.0**	**10.5**	**10.5**	**16.0**	**28**	**25**	**27**	**20**
6x4	.37	.35	4.0	9.5	9.5	15.0	28	26	27	26
8x4	**.39**	**.35**	**5.0**	**10.5**	**10.5**	**16.0**	**36**	**34**	**36**	**33**
8x6	.39	.37	4.0	9.5	9.5	15.0	39	38	39	30
10x4	**.41**	**.35**	**7.0**	**12.5**	**12.5**	**18.0**	**53**	**46**	**51**	**...**
10x6	.41	.37	5.0	10.5	10.5	16.0	59	48	52	49
10x8	**.41**	**.39**	**4.0**	**9.5**	**9.5**	**15.0**	**54**	**52**	**52**	**47**
12x4	.43	.35	9.0	14.5	14.5	20.0	67	61	68	60
12x6	**.43**	**.37**	**7.0**	**12.5**	**12.5**	**18.0**	**64**	**58**	**66**	**54**
12x8	.43	.39	5.0	10.5	10.5	16.0	57	62	65	60
12x10	**.43**	**.41**	**4.0**	**9.5**	**9.5**	**15.0**	**63**	**61**	**65**	**57**
14x6	.51	.44	9.0	17.0	14.5	22.5	104	107	112	...
14x8	**.51**	**.45**	**7.0**	**15.0**	**12.5**	**20.5**	**104**	**107**	**108**	**...**
14x10	.51	.46	5.0	13.0	10.5	18.5	100	102	100	...
14x12	**.51**	**.47**	**4.0**	**12.0**	**9.5**	**17.5**	**100**	**101**	**100**	**100**
16x6	.52	.45	11.0	19.0	16.5	24.5	132	131	141	128
16x8	**.52**	**.46**	**9.0**	**17.0**	**14.5**	**22.5**	**136**	**128**	**136**	**136**
16x10	.52	.47	7.0	15.0	12.5	20.5	128	124	128	123
16x12	**.52**	**.48**	**5.0**	**13.0**	**10.5**	**18.5**	**120**	**123**	**119**	**113**
16x14	.52	.51	4.0	12.0	12.0	20.0	140	139	138	133
18x8	**.59**	**.45**	**14.0**	**22.0**	**19.5**	**27.5**	**201**	**180**	**195**	**...**
18x10	.59	.47	12.0	20.0	17.5	25.5	196	180	185	...
18x12	**.59**	**.49**	**10.0**	**18.0**	**15.5**	**23.5**	**175**	**170**	**190**	**...**
18x14	.59	.56	8.0	16.0	16.0	24.0	180	181	200	...
18x16	**.59**	**.57**	**7.0**	**15.0**	**15.0**	**23.0**	**194**	**180**	**190**	**...**
20x10	.60	.47	14.0	22.0	19.0	27.5	225	210	210	...
20x12	**.60**	**.49**	**12.0**	**20.0**	**17.5**	**25.5**	**214**	**208**	**210**	**...**
20x14	.60	.56	10.0	18.0	18.0	26.0	208	198	205	...
20x16	**.60**	**.57**	**8.0**	**16.0**	**16.0**	**24.0**	**225**	**215**	**222**	**...**
20x18	.60	.59	7.0	15.0	15.0	23.0	233	220	...	...
24x12	**.62**	**.49**	**16.0**	**24.0**	**21.5**	**29.5**	**320**	**302**	**300**	**...**
24x14	.62	.56	14.0	22.0	22.0	30.0	314	325	322	...
24x16	**.62**	**.57**	**12.0**	**20.0**	**20.0**	**28.0**	**325**	**319**	**340**	**...**
24x18	.62	.59	10.0	18.0	18.0	26.0	325	310	...	...
24x20	**.62**	**.60**	**8.0**	**16.0**	**16.0**	**24.0**	**315**	**305**	**...**	**...**
30x16	* (Available Soon see List Prices)						...	...		
30x18	*** (Available Soon see List Prices)**						**...**	**...**		
30x20	* (Available Soon see List Prices)						...	...		
30x24	*** (Available Soon see List Prices)**						**...**	**...**		
36x16	* (Available Soon see List Prices)						...	...		
36x20	* (Available Soon see List Prices)						...	...		
36x24	* (Available Soon see List Prices)						...	...		

Tyler/Union

MECHANICAL JOINT C153 DUCTILE IRON COMPACT FITTINGS

Sizes 3" thru 12" UL Listed For Fire Main Equipment

SOLID & TAPPED PLUGS & CAPS

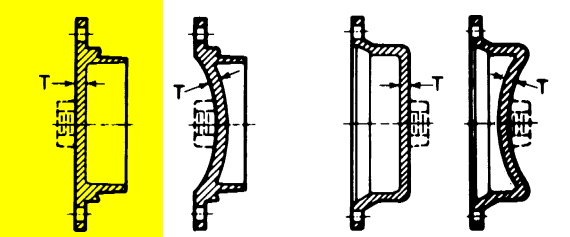

3"-12" 14"-24" 3"-12" 14"-24"

MJ Plug MJ Cap

Size	Dimensions T	Max. Tap	Weights Plugs	Caps
3	.46	2	9	8
4	**.46**	**2**	**9**	**10**
6	.46	2	18	18
8	**.46**	**2**	**25**	**26**
10	.56	2	36	32
12	**.56**	**2**	**47**	**46**
14	.62	2	76	85
16	**.62**	**2**	**98**	**94**
18	.65	2	138	121
20	**.66**	**2**	**158**	**149**
24	.68	2	223	210
30	* (Available Soon see List Prices)		...	...
36	* (Available Soon see List Prices)		...	...

SOLID SLEEVES

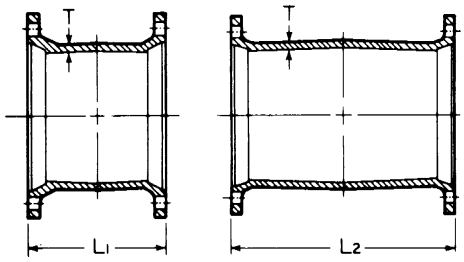

Short Long

Size	T	Dimensions L1	L2	Weights Short	Long
3	.34	7.5	12	13	22
4	**.35**	**7.5**	**12**	**19**	**25**
6	.37	7.5	12	28	39
8	**.39**	**7.5**	**12**	**38**	**55**
10	.41	7.5	12	48	68
12	**.43**	**7.5**	**12**	**62**	**81**
14	.56	9.5	15	116	146
16	**.57**	**9.5**	**15**	**138**	**174**
18	.68	9.5	15	160	230
20	**.69**	**9.5**	**15**	**212**	**269**
24	.75	9.5	15	272	380
30	* (Available Soon see List Prices)			...	...
36	* (Available Soon see List Prices)			...	...

MJ x FE Flange Dimensions are on Page 1.

TAPPED TEE

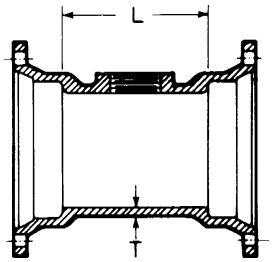

MJ Tapped Tee (2" Tap)

Size	Dimensions T	L	Max. Tap	Weights
3	.34	6	2	19
4	**.35**	**6**	**2**	**23**
6	.37	6	2	35
8	**.39**	**6**	**2**	**54**
10	.41	6	2	68
12	**.43**	**6**	**2**	**88**
16	.52	6	2	164

ADAPTERS

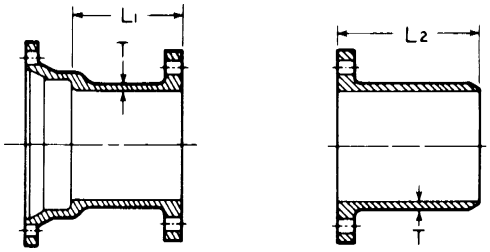

MJ x FE FE x PE

Size	T	Dimensions L1	L2	Weights MJxFE	FExPE
3	.34	6	12	18	...
4	**.35**	**6**	**12**	**26**	**23**
6	.37	6	12	36	35
8	**.39**	**6**	**12**	**50**	**50**
10	.41	6	12	60	69
12	**.43**	**6**	**12**	**88**	**88**
14	.51	6	12	127	...
16	**.52**	**6**	**12**	**155**	**149**
20	.60	6	...	275	...
30	**.66**	**8**	**...**	**...**	**...**
36	.74	8	...	...	...

Tyler/Union

MECHANICAL JOINT DUCTILE IRON COMPACT SPLIT REPAIR GLANDS

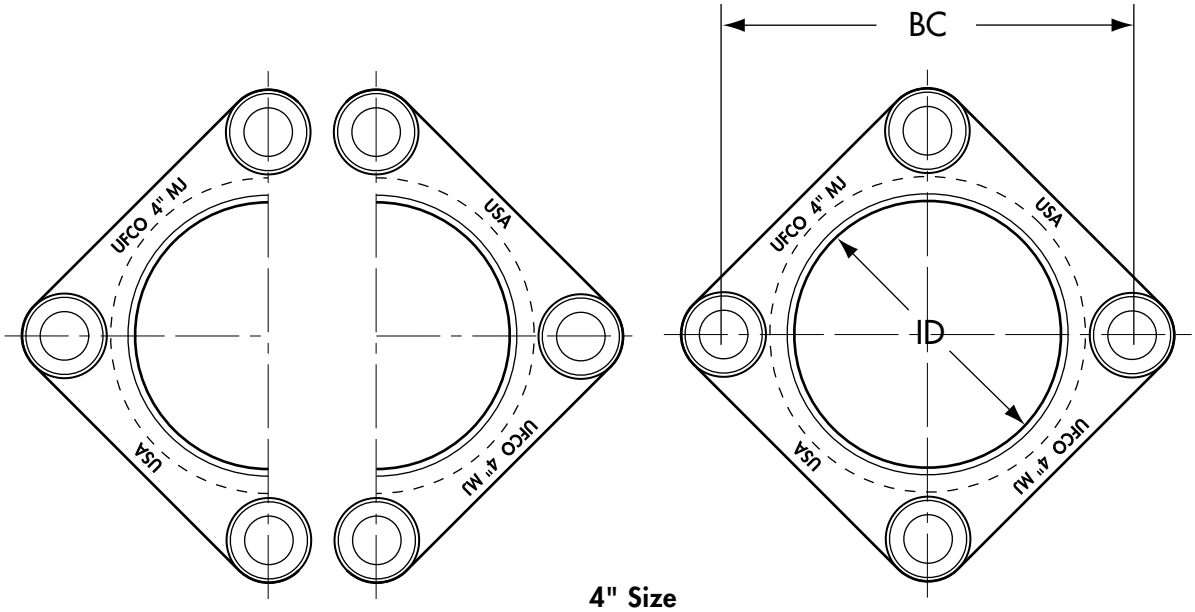

4" Size

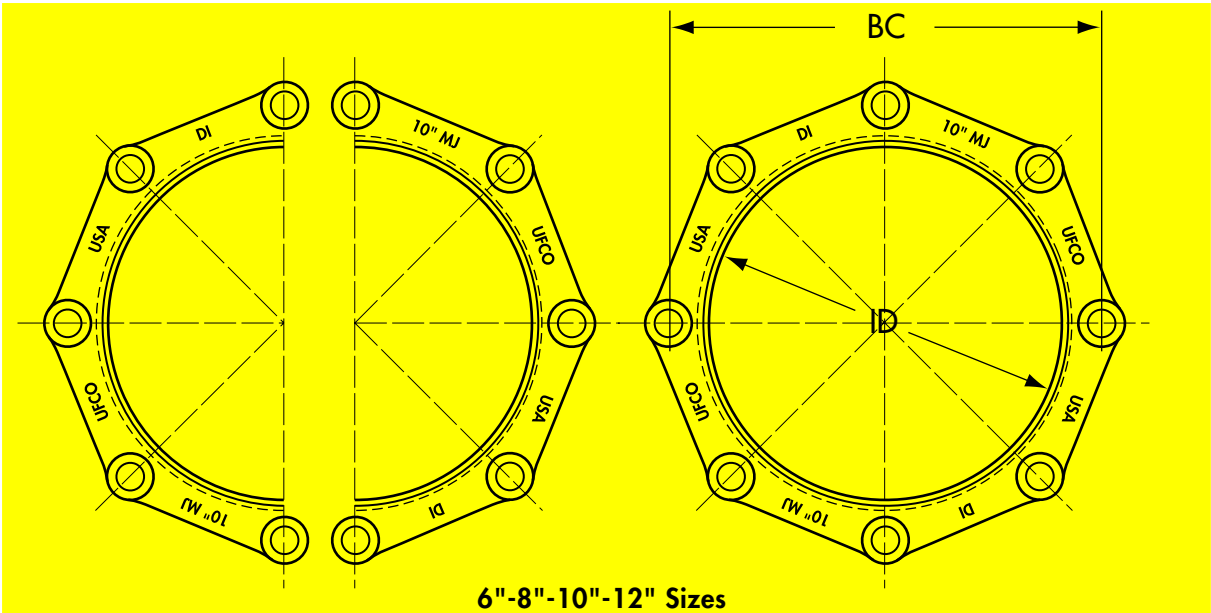

6"-8"-10"-12" Sizes

MJ Compact Split Repair Glands

Size	Inside Diameter (+.07-.03)	Bolt Circle (+-.06)	Weight Lbs.
4	4.90	7.50	4.0
6	**7.00**	**9.50**	**5.0**
8	9.15	11.75	6.0
10	**11.20**	**14.00**	**7.7**
12	13.50	16.25	10.2

Split glands work with standard MJ gaskets and standard T-head bolts.
Glands are shipped in halves and do not need separate bolts.
T-head bolts alone hold the halves together.

Certificate of Compliance

Birmingham Fastener Manufacturing
P.O. Box 10323
Birmingham, AL 35202
(205) 595-3511

Description Material

Customer: Union Foundry

Item Description: 3/4"-10 Fluorocarbon Coated T-Head Bolt

Bolt Specification: ANSI/AWWA C111/A21.11-00

Coating Type: FluoroKote#1

Raw Material Analysis [1]

Material: Low carbon weathering steel Grade: ASTM A242

C	0.20 max	Mn	1.25 max	S	0.030 max
Ni	0.25 max	Cu	0.20 min	Combined (Ni, Cu, Cr)	1.25 min

Note 1: The raw materials analysis is taken from the chemical and physical requirements of AWWA C111/A21.11-00 MFG in USA

Product Analysis

Yield Strength	45,000 psi min.	Elongation in 2 inches	20% min.
Proof Load	13,500 lbf min.		

Coating Analysis

Thickness	0.0005 - 0.0025 in.	Coefficent of Friction	0.02 - 0.10
Continous Use Temp.	-420°F - 500°F	Tensile Strength	2000 - 4000 psi
Corrosion Resistance(Salt Spray ASTM B117)	up to 4000 hrs.		

This information represents the range of chemical and physical characteristics of the referenced item. Items sold by Birmingham Fastener Manufacturing under the above item description will meet the requirements above.

Authorized Signature: *Shawn Brasher* 6/15/2009

Shawn Brasher
Sales

MECHANICAL JOINT GASKETS

ANSI/AWWA C111/A21.11

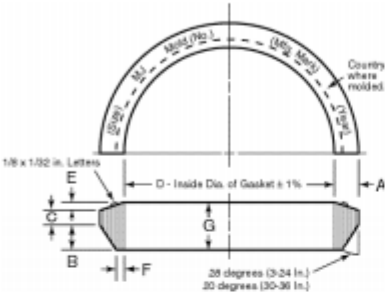

Mechanical Joint Gasket Dimensions in Inches

Pipe Size	Pipe OD	A ± 0.01"	B	C	D ±1%	E ± 0.01%	F ± 0.01"	G ± 0.02"
2*	2.50	.48	.62	.31	2.48	.12	.15	1.05
3	3.96	.48	.62	.31	3.86	.12	.15	1.05
4	4.80	.62	.75	.31	4.68	.16	.22	1.22
6	6.90	.62	.75	.31	6.73	.16	.22	1.22
8	9.05	.62	.75	.31	8.85	.16	.22	1.22
10	11.10	.62	.75	.31	10.87	.16	.22	1.22
12	13.20	.62	.75	.31	12.95	.16	.22	1.22
14	15.30	.62	.75	.31	14.99	.16	.22	1.22
16	17.40	.62	.75	.31	17.07	.16	.22	1.22
18	19.50	.62	.75	.31	19.13	.16	.22	1.22
20	21.60	.62	.75	.31	21.20	.16	.22	1.22
24	25.80	.62	.75	.31	25.34	.16	.22	1.22
30	32.00	.73	1.00	.38	31.47	.16	.37	1.54
36	38.30	.73	1.00	.38	37.67	.16	.37	1.54
42	44.50	.73	1.00	.38	43.78	.16	.37	1.54
48	50.80	.73	1.00	.38	49.98	.16	.37	1.54

Not included in AWWA C111. Manufacturer's Standard.

GASKETS ARE MADE IN THE USA

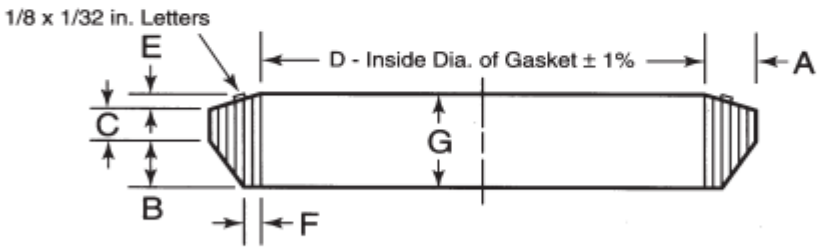

Mechanical Joint Transition Gasket Dimensions in Inches

Pipe Size	A ± 0.01"	B	C	D ±1%	E	F ± 0.01"	G ± 0.02"
3	.70	.62	.31	3.45	.16	.37	1.11
4	.77	.75	.31	4.43	.16	.37	1.26
6	.76	.75	.31	6.53	.16	.36	1.25
8	.82	.75	.31	8.50	.16	.42	1.27
10	.79	.75	.31	10.59	.16	.39	1.26
12	.84	.75	.31	12.56	.16	.44	1.28

"AS IS" Disclaimers

The information contained is this submittal is a compilation of product information made available by manufactures or other suppliers about their products, and while Ferguson Enterprises, INC. ("Ferguson") makes reasonable efforts to present current information in the form in which it is received by Ferguson, the information is provided to you "AS IS", for your internal informational purposes only, without any representation or warranty of any kind, including any implied warranty of quality, merchantability, fitness for any particular purpose, or non-infringement. In no event will Ferguson be liable to any party for any direct, indirect, incidental, special or any other damages, even if Ferguson is expressly advised about the possibility of such damages, to the fullest extent allowable by law. The material in this submittal could contain technical inaccuracies or typographical errors, and information will be changed, updated and deleted without notice. Manufactures or other suppliers may make improvements and/or changes in the products described in this material at any time.

Customer Service Policy

Ferguson Enterprises, Inc. is unconditionally committed to customer service satisfaction.

Ferguson's commitment to assisting our customers obtain redress under the terms of manufactures' warranties is a fundamental principle of our customer service philosophy. Ferguson does not manufacture any of the products we sell. Consequently, like our customers, Ferguson must look to manufactures to provide warranty, therefore, is that provided by manufactures.

Warranty Disclaimer. Ferguson Enterprises, Inc. and its subsidiaries ("Ferguson") make no express or implied warranties. ***Ferguson hereby disclaims all warranties, whether express or implied by operation of law or otherwise, including, without limitation, all implied warranties of merchantability or fitness for a particular purpose***. Ferguson shall not be liable, directly or indirectly, for any loss, cost, damage or expense, including, without limitation, labor charges or consequential or incidental damages, arising directly or indirectly from operation, condition or use of products sold by Ferguson. Ferguson's sole liability, if any shall be limited to the product's sale price in all cases.

Submittal: 118
Revision: 1
Date Submitted: 8/9/2021
Response Due By:

kokosing CONSTRUCTION COMPANY, INC.
886 McKinley Ave.
Columbus, OH 43222
Phone: (614) 228-1029
Fax: (614) 228-7065

Project: 16051 - ODOT 173000 CUY IR 490/SR010 (OC3)
Description: BU22 Decorative Fence

To: Mark Gabele, PE
Ohio Department of Transportation - District 12
Email: Mark.Gabele@dot.ohio.gov

From: Nicole DeVille
Kokosing Construction Company, Inc.
Email: nfd@kokosing.biz

Submittal Type:	Submitted For:
☐ Engineered Drawings	☐ Approval
☒ Shop Drawings	☒ Record
☐ Working Drawings	☐ Other
☐ CPM Schedule	
☐ Material Certifications / Test Results	**Sent Via:**
☐ Reports	☒ Attached (Electronic)
☐ Product Data/Samples	☐ Attached (Hard Copy)
☐ Other:	

Submittal #	Copies	Spec #	Rev. #	Description	
118	1		1	118 – BU22 Decorative Fence	

Comments:
Please see attached for BU22 Decorative Fence Shop Drawings. They are under review with NSRR simultaneous.

Signed: Nicole DeVille

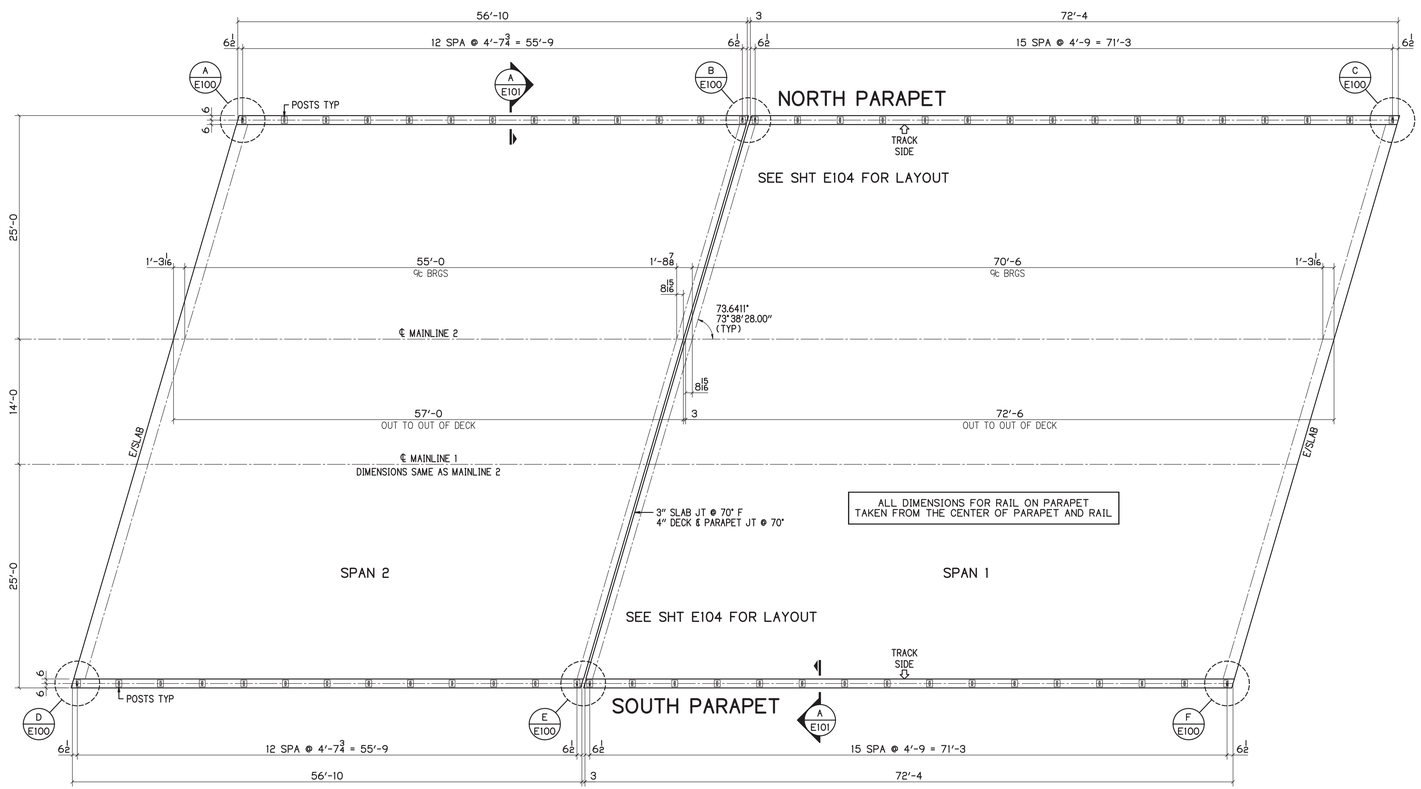

FENCE RAIL POST PLAN

NORFOLK SOUTHERN RR BRIDGE

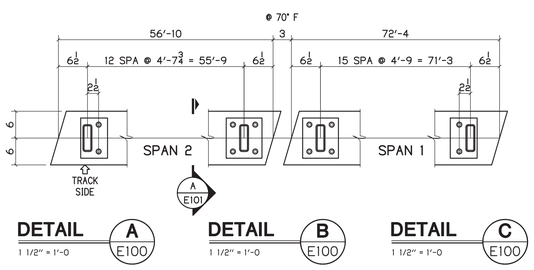

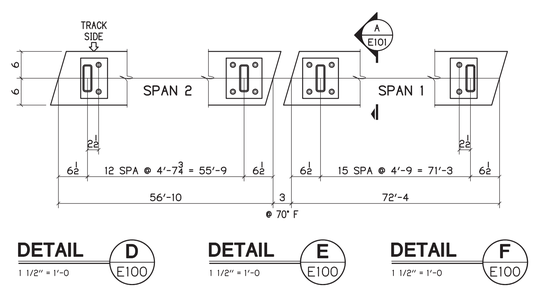

INDEX OF SHEETS

SHEET #	DESCRIPTION
E100	PLAN & NOTES
E101	ELEVATIONS & DETAILS
E102	RAIL / WIRE MESH SECTIONS & DETAILS
E103	ALUMINUM HANDRAIL DETAILS
E104	FENCE RAIL LAYOUT
E105	HANDRAIL LAYOUT
100	ANCHOR DETAILS & FIELD BOLTS
101 - 105	POSTS
106 - 110	RAIL PANELS
111	CLAMP BARS
112	WIRE MESH PANELS
113	HANDRAILS

GENERAL NOTES

FINISH

THE FABRICATED RAILING AND HARDWARE (EXCEPT EMBED ANCHORS AND ALUMINUM HANDRAIL SYSTEM) SHALL BE GALVANIZED PER CEMS 711.02 EXCEPT THAT FABRICATED RAILING ELEMENTS SHALL NOT BE POST TREATED WITH WATER QUENCHING OR CHROMATE CONVERSION COATED.

ALL VENT HOLES REQUIRED FOR GALVANIZING SHALL BE AT THE DISCRETION OF THE FABRICATOR AND GALVANIZER.

THE PAINT SYSTEM SHALL BE PROVIDED UNDER A SEPARATE COVER. THE FINISH COAT SHALL MATCH FEDERAL COLOR STANDARD FS 595C-17038 BLACK.

WELDING

AWS - BRIDGE WELDING CODE D1.5 - LATEST EDITION

AWS - STRUCTURAL WELDING CODE D1.1 - LATEST EDITION

WELD PROCESS SHALL BE GMAW

RAILING NOTES

1. ALL POSTS SHALL BE FABRICATED AND SET NORMAL (PERPENDICULAR) TO GRADE FOR BU-22, NORFOLK SOUTHERN RR BRIDGE. THE SLOPE GRADE IS NOT GREAT ENOUGH TO SUPPORT FABRICATING PLUMB POSTS WITH SLOPED RAIL PANELS.
2. ALL EMBEDDED ANCHORS SHALL BE INSTALLED WITH A TOLERANCE OF +/- 1/16".
3. ALL TEMPLATE PLATES FOR THE ANCHORS SHALL NOT BE SUPPLIED BY THIS FABRICATOR. THE CONTRACTOR SHALL BE RESPONSIBLE TO INSTALL THE ANCHORS WITH THE PRECISION REQUIRED FOR POST INSTALLATION.
4. ALL PLASTIC BASE ℙ SHIMS AND CAULKING SHALL NOT BE SUPPLIED BY THIS FABRICATOR. THE CONTRACTOR OR INSTALLER SHALL BE REQUIRED TO SUPPLY AND INSTALL THESE REQUIREMENTS PER THE CONTRACT.

WIRE MESH NOTES

1. THE WELDED WIRE MESH SHALL BE 10.5 GA CORE WIRE, GALVANIZED AFTER WELDING.
2. THE WIRE MESH PATTERN SHALL BE 1x1 SET IN THE SQUARE POSITION AS PLUMB.
3. THE WIRE MESH PANELS SHALL BE FIELD INSTALLED USING CLAMP BARS.
4. THE CLAMP BARS SHALL BE SHOP DRILLED FOR FASTENER LOCATIONS.
5. FIELD INSTALLATION SHALL USE THE 1/4" SELF DRILL AND TAP SCREWS.
6. THE TEK SCREW HEADS SHALL BE FIELD PAINTED BLACK AFTER INSTALLATION.

ALUMINUM HANDRAIL NOTES

1. ALL ALUMINUM COMPONENTS FOR THE HANDRAIL AND SUPPORTS SHALL BE MILL FINISH.
2. ALUMINUM HANDRAIL SHALL BE ATTACHED TO A MINIMUM OF THREE POSTS BEFORE SPLICING.
3. ALL HOLES FOR MOUNTING HANDRAIL TO SLEEVES SHALL BE FIELD DRILLED AND TAPPED.

ENGINEER NOTES

THE ENGINEER STAMP IS TO CONFIRM THAT THE RAIL DETAILS SHOWN MEETS THE THE DESIGN LIVE LOADS PER AASHTO LRFD 13.8.2.

MATERIAL NOTES

NO	MATERIAL	ASTM	GRADE	TYPE	NOTES
1	PLATES, ANGLES & BARS	A709	36/50		
2	HSS RAIL TUBES	A500	B		
3	WIRE MESH	A185-1064			
4	ALUMINUM PIPE	B429	6061-T6		
5	ALUMINUM PLATE	B209	6061-T6		

FASTENER NOTES

NO	MATERIAL	ASTM/ANSI	GRADE	TYPE	REMARKS
1	HIGH STRENGTH BOLTS	A325			GALV ASTM A153
2	HIGH STRENGTH NUTS	A563			GALV ASTM A153
3	HIGH STRENGTH WASHERS	F436			GALV ASTM A153
4	SS ALL THREAD ANCHOR RODS	A276		304	MILL FINISH
5	SS HEX BOLTS	A276		304	MILL FINISH
6	SS HEX NUTS	A276		304	MILL FINISH
7	SS WASHERS	A276		302	MILL FINISH

MATERIAL QUANTITY

DESCRIPTION	POSTS	CONTRACT LN/FT	ACTUAL LN/FT	REMARKS
BU-22 DECORATIVE FENCE ON RR BRIDGE	58	259'-6	259'-6	

BU-22 NSRR BRIDGE

FOR APPROVAL 06-18-21

P.H. DREW INC.
2450 N. RACEWAY RD. - P.O. BOX 34295
INDIANAPOLIS, INDIANA 46234
PHONE : (317) 297-5152
FAX : (317) 297-5313

APPROVAL

CUY-IR490 / SR010-2.09 / 19.28

DECORATIVE FENCE

PLAN & NOTES

REVISION

REV	DATE	DESCRIPTION	BY
1	03-10-21	REV PER APP & RFI COMMENTS	MRH

APPROVAL RECORD

DATE	ISSUED	APP DATE	APPROVAL STATUS
11-01-20	APPROVAL	01-25-21	RESUBMIT
03-10-21	APPROVAL	04-13-21	RESUBMIT
04-13-21	APPROVAL	06-18-21	RESUBMIT
06-18-21	APPROVAL		

STATE	OHIO
COUNTY	CUYAHOGA (CITY OF CLEVELAND)
PROJECT	3000 (17)
CONTRACT	PID 96833
SECTION	
STRUCTURE	
STATE JOB	
CUSTOMER	LAKE ERIE CONSTRUCTION COMPANY
CONTRACTOR	
ARCH/ENG	
REFERENCE	
ITEM	
FINISH	SEE NOTES-SHT E100

STATE OF OHIO
EYN B. UZMAN
62564
REGISTERED PROFESSIONAL ENGINEER
8/4/21

DRAWN BY	CHECKED BY	MRH NO	JOB MGR	DWG STATUS	JOB NO.	TOTAL SHEETS	SHEET
MRH 04-07-20	SRF 06-15-21	1914	JL	APPROVAL 06-18-21	19-1108		E100

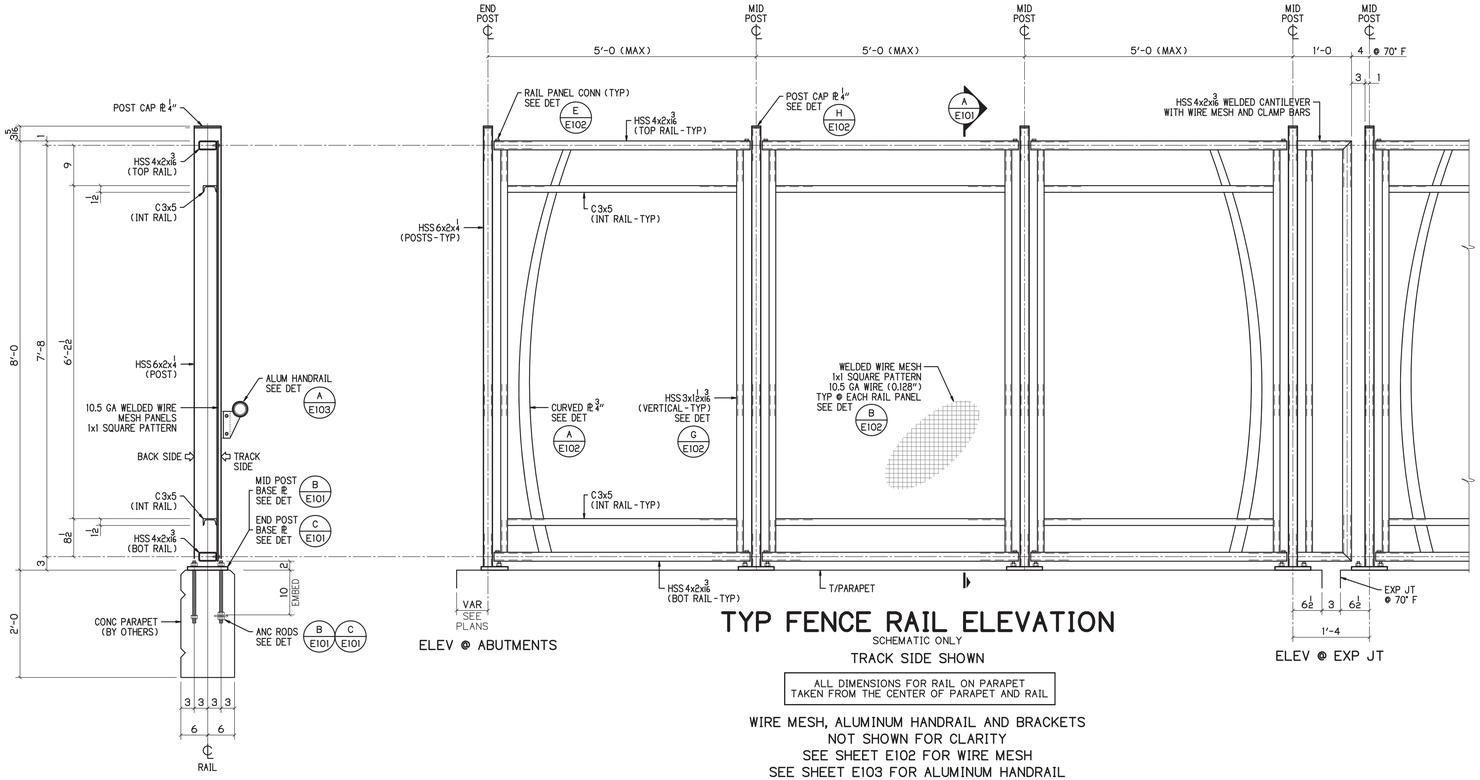

ELEV @ ABUTMENTS

ELEV @ EXP JT

TYP FENCE RAIL ELEVATION

SCHEMATIC ONLY

TRACK SIDE SHOWN

ALL DIMENSIONS FOR RAIL ON PARAPET TAKEN FROM THE CENTER OF PARAPET AND RAIL

WIRE MESH, ALUMINUM HANDRAIL AND BRACKETS NOT SHOWN FOR CLARITY
SEE SHEET E102 FOR WIRE MESH
SEE SHEET E103 FOR ALUMINUM HANDRAIL

SECTION A / E101

3/4" = 1'-0

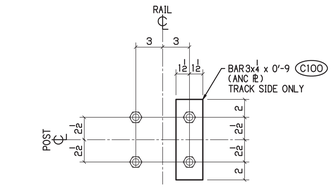

PLAN @ ANCHORS

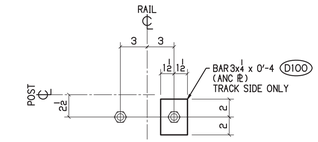

PLAN @ ANCHORS

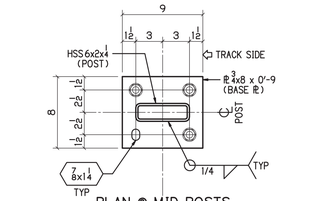

PLAN @ MID POSTS

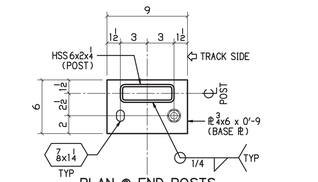

PLAN @ END POSTS

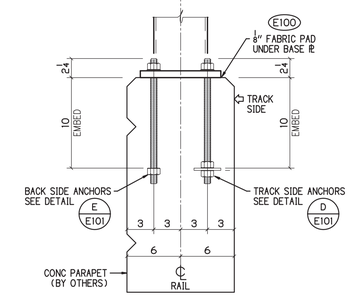

DETAIL B / E101

1 1/2" = 1'-0

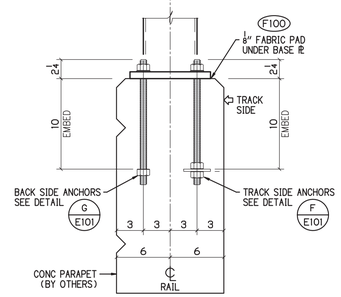

DETAIL C / E101

1 1/2" = 1'-0

NOTE
ALL NUTS, WASHERS AND ANCHOR PLATES SHALL BE FIELD INSTALLED

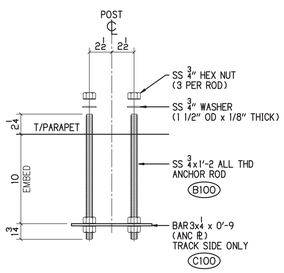

DETAIL D / E101

1 1/2" = 1'-0

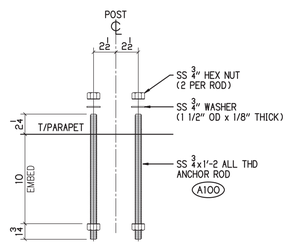

DETAIL E / E101

1 1/2" = 1'-0

NOTE
ALL NUTS, WASHERS AND ANCHOR PLATES SHALL BE FIELD INSTALLED

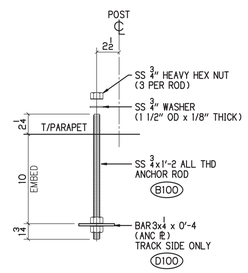

DETAIL F / E101

1 1/2" = 1'-0

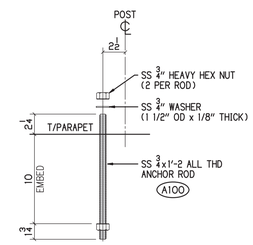

DETAIL G / E101

1 1/2" = 1'-0

BU-22 NSRR BRIDGE

FOR APPROVAL 06-18-21

P.H. DREW INC.
2450 N. RACEWAY RD. - P.O. BOX 34295
INDIANAPOLIS, INDIANA 46234
PHONE : (317) 297-5152
FAX : (317) 297-5313

APPROVAL

CUY-IR490 / SR010-2.09 / 19.28

DECORATIVE FENCE

ELEVATIONS & DETAILS

REVISION REV	DATE	DESCRIPTION	BY
1	03-10-21	REV PER APP & RFI COMMENTS	MRH

APPROVAL RECORD DATE	ISSUED	APP DATE	APPROVAL STATUS
11-01-20	APPROVAL	01-25-21	RESUBMIT
03-10-21	APPROVAL	04-13-21	RESUBMIT
04-13-21	APPROVAL	06-18-21	RESUBMIT
06-18-21	APPROVAL		

STATE	OHIO
COUNTY	CUYAHOGA (CITY OF CLEVELAND)
PROJECT	3000 (17)
CONTRACT	PID 96833
SECTION	
STRUCTURE	
STATE JOB	
CUSTOMER	LAKE ERIE CONSTRUCTION COMPANY
CONTRACTOR	
ARCH/ENG	
REFERENCE	
ITEM	
FINISH	SEE NOTES-SHT E100

STATE OF OHIO
JOHN B. KIZMAN
62564
REGISTERED PROFESSIONAL ENGINEER
8/4/21

DRAWN BY	CHECKED BY	MRH NO	JOB MGR	DWG STATUS	JOB NO.	TOTAL SHEETS	SHEET
MRH 04-07-20	SRF 06-15-21	1914	JL	APPROVAL 06-18-21	19-1108		E101

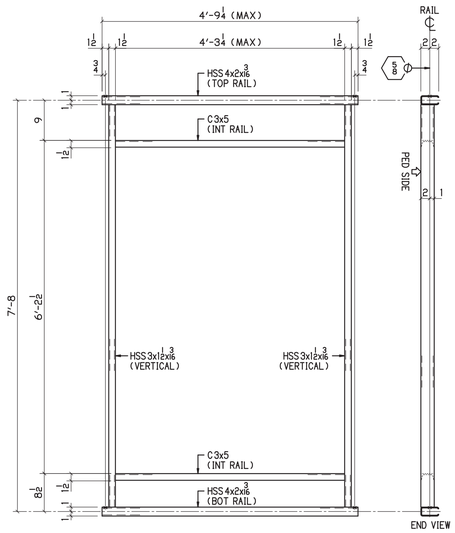

TYP FENCE RAIL DETAIL

LEVEL AND SLIGHT SLOPE
PEDESTRIAN SIDE SHOWN

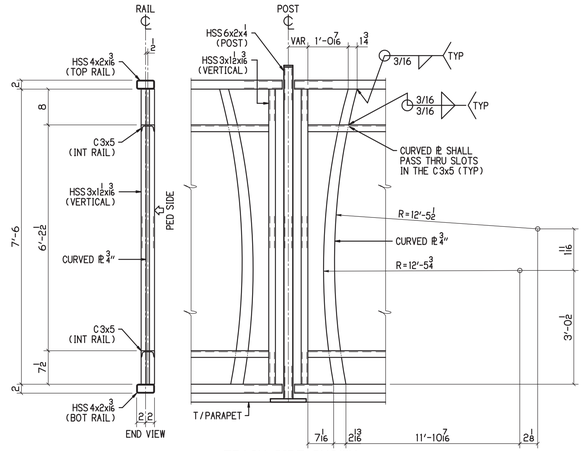

TRACK SIDE SHOWN
WIRE FABRIC
NOT SHOWN FOR CLARITY

DETAIL A E102

3/4" = 1'-0

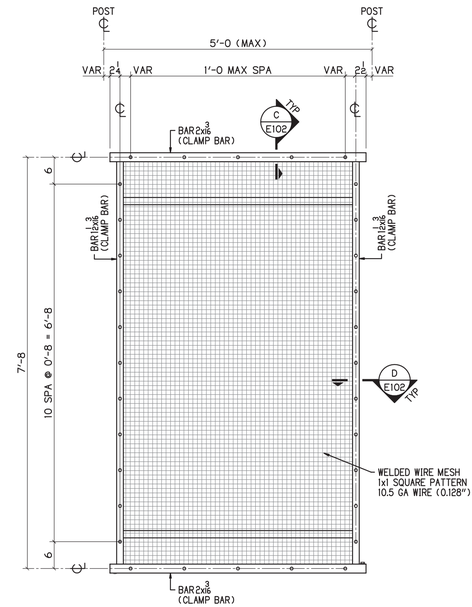

TYP WIRE MESH ELEVATION

PEDESTRIAN SIDE SHOWN
LEVEL SHOWN / SLOPED SIMILAR

DETAIL B E102

3/4" = 1'-0

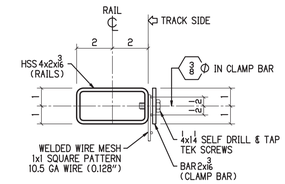

SECTION C E102

3" = 1'-0

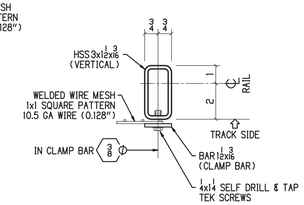

SECTION D E102

3" = 1'-0

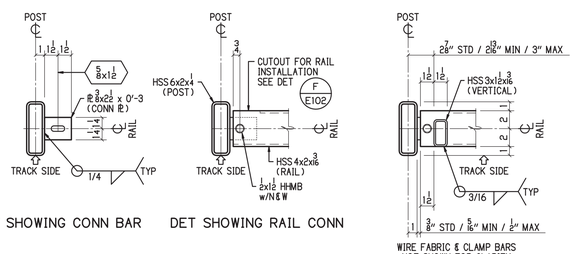

DET SHOWING CONN BAR

DET SHOWING RAIL CONN

DET SHOWING VERTICAL

DETAIL E E102

1 1/2" = 1'-0

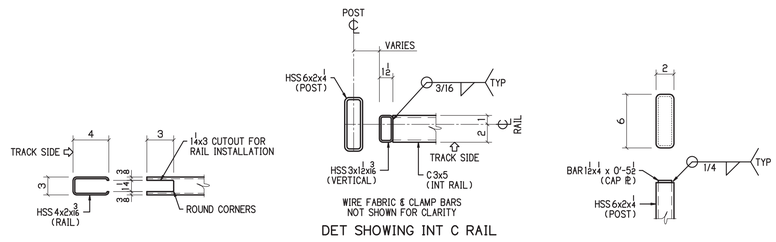

DET SHOWING INT C RAIL

DETAIL F E102

1 1/2" = 1'-0

DETAIL G E102

1 1/2" = 1'-0

DETAIL H E102

1 1/2" = 1'-0

BU-22 NSRR BRIDGE
FOR APPROVAL 06-18-21

P.H. DREW INC.
2450 N. RACEWAY RD. - P.O. BOX 34295
INDIANAPOLIS, INDIANA 46234
PHONE : (317) 297-5152
FAX : (317) 297-5313

APPROVAL

CUY-IR490 / SR010-2.09 / 19.28

DECORATIVE FENCE

RAIL / WIRE MESH SECTIONS & DETAILS

REVISION

REV	DATE	DESCRIPTION	BY
1	03-10-21	REV PER APP & RFI COMMENTS	MRH

APPROVAL RECORD

DATE	ISSUED	APP DATE	APPROVAL STATUS
11-01-20	APPROVAL	01-25-21	RESUBMIT
03-10-21	APPROVAL	04-13-21	RESUBMIT
04-13-21	APPROVAL	06-18-21	RESUBMIT
06-18-21	APPROVAL		

STATE	OHIO
COUNTY	CUYAHOGA (CITY OF CLEVELAND)
PROJECT	3000 (17)
CONTRACT	PID 96833
SECTION	
STRUCTURE	
STATE JOB	
CUSTOMER	LAKE ERIE CONSTRUCTION COMPANY
CONTRACTOR	
ARCH/ENG	
REFERENCE	
ITEM	
FINISH	SEE NOTES - SHT E100

STATE OF OHIO
ERIN B. SEZMAN
62564
REGISTERED PROFESSIONAL ENGINEER
8/4/21

DRAWN BY	CHECKED BY	MRH NO	JOB MGR	DWG STATUS	JOB NO.	TOTAL SHEETS	SHEET
MRH 04-07-20	SRF 06-15-21	1914	JL	APPROVAL 06-18-21	19-1108		E102

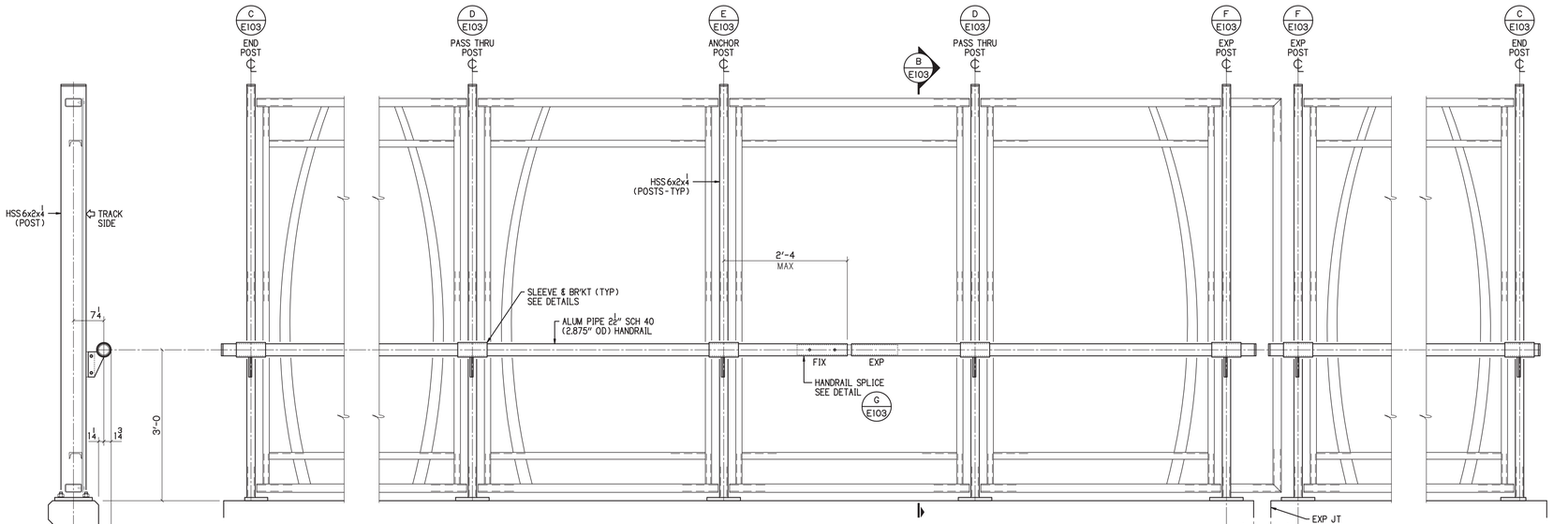

TYP HANDRAIL ELEVATION

SCHEMATIC ONLY
WIRE MESH NOT SHOWN FOR CLARITY
TRACK SIDE SHOWN

DETAIL A E103
NTS

SECTION B E103
3/4" = 1'-0

ALUMINUM HANDRAIL NOTES

1. ALL ALUMINUM COMPONENTS FOR THE HANDRAIL AND SUPPORTS SHALL BE MILL FINISH.
2. ALUMINUM HANDRAIL SHALL BE ATTACHED TO A MINIMUM OF THREE POSTS BEFORE SPLICING.
3. ALL HOLES FOR MOUNTING HANDRAIL TO SLEEVES SHALL BE FIELD DRILLED AND TAPPED.

MATERIAL NOTES

NO	MATERIAL	ASTM	GRADE	TYPE	REMARKS
1	ALUMINUM PIPE	B429		6061-T6	
2	ALUMINUM PLATE	B209		6061-T6	

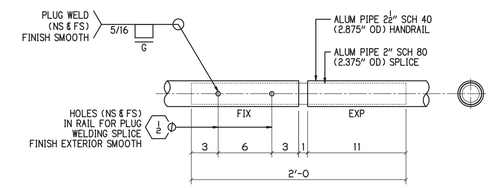

HANDRAIL SPLICE

DETAIL G E103
1 1/2" = 1'-0

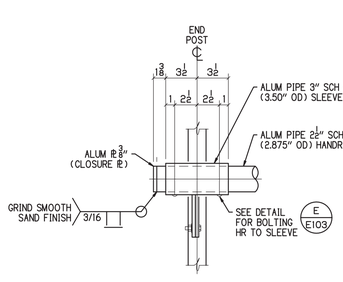

END POST

DETAIL C E103
1 1/2" = 1'-0

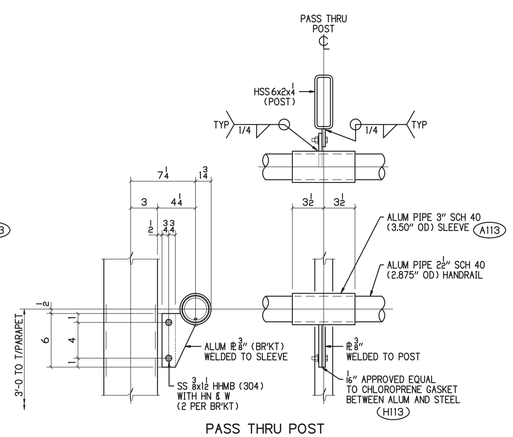

PASS THRU POST

DETAIL D E103
1 1/2" = 1'-0

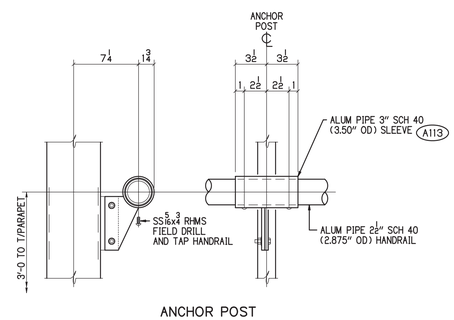

ANCHOR POST

DETAIL E E103
1 1/2" = 1'-0

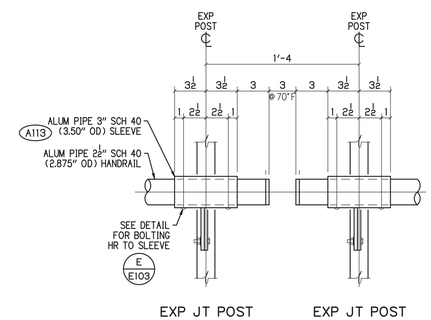

EXP JT POST EXP JT POST

DETAIL F E103
1 1/2" = 1'-0

STATE OF OHIO
KEVIN B. HUZMAN
62564
REGISTERED PROFESSIONAL ENGINEER
8/4/21

BU-22 NSRR BRIDGE
FOR APPROVAL 06-18-21

P.H. DREW INC.
2450 N. RACEWAY RD. - P.O. BOX 34295
INDIANAPOLIS, INDIANA 46234
PHONE : (317) 297-5152
FAX : (317) 297-5313

APPROVAL

CUY-IR490 / SR010-2.09 / 19.28

DECORATIVE FENCE

ALUMINUM HANDRAIL DETAILS

REVISION

REV	DATE	DESCRIPTION	BY
1	03-10-21	REV PER APP & RFI COMMENTS	MRH

APPROVAL RECORD

DATE	ISSUED	APP DATE	APPROVAL STATUS
11-01-20	APPROVAL	01-25-21	RESUBMIT
03-10-21	APPROVAL	04-13-21	RESUBMIT
04-13-21	APPROVAL	06-18-21	RESUBMIT
06-18-21	APPROVAL		

STATE	OHIO
COUNTY	CUYAHOGA (CITY OF CLEVELAND)
PROJECT	3000 (17)
CONTRACT	PID 96833
SECTION	
STRUCTURE	
STATE JOB	
CUSTOMER	LAKE ERIE CONSTRUCTION COMPANY
CONTRACTOR	
ARCH/ENG	
REFERENCE	
ITEM	
FINISH	SEE NOTES - SHT E100

DRAWN BY	CHECKED BY	MRH NO	JOB MGR	DWG STATUS	JOB NO.	TOTAL SHEETS	SHEET
MRH 04-07-20	SRF 06-15-21	1914	JL	APPROVAL 06-18-21	19-1108		E103

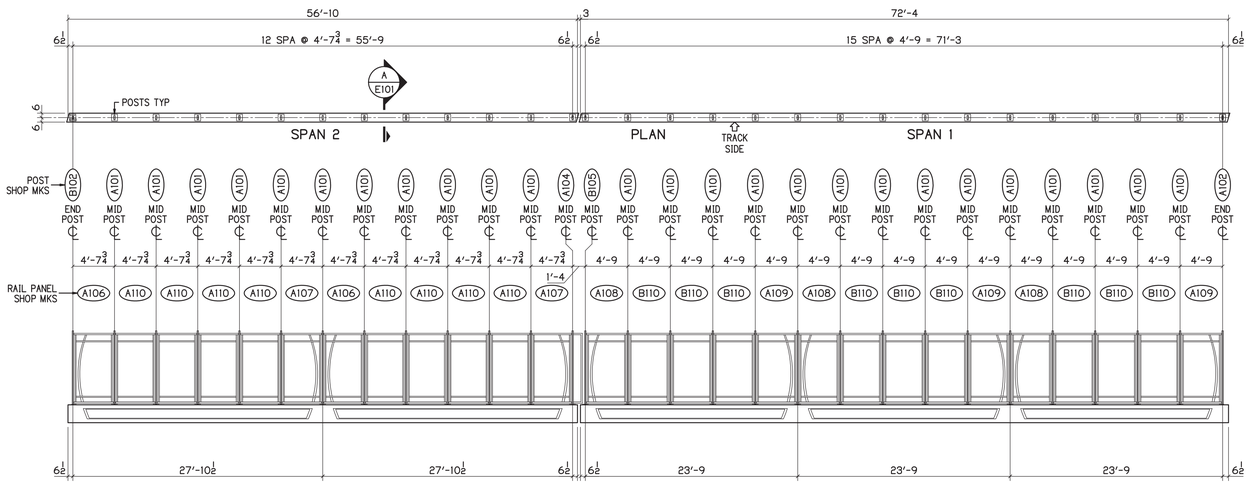

FENCE RAIL PLAN & ELEVATION

NORFOLK SOUTHERN RR BRIDGE - NORTH PARAPET
TRACK SIDE SHOWN

ALL DIMENSIONS FOR RAIL ON PARAPET TAKEN FROM THE CENTER OF PARAPET AND RAIL

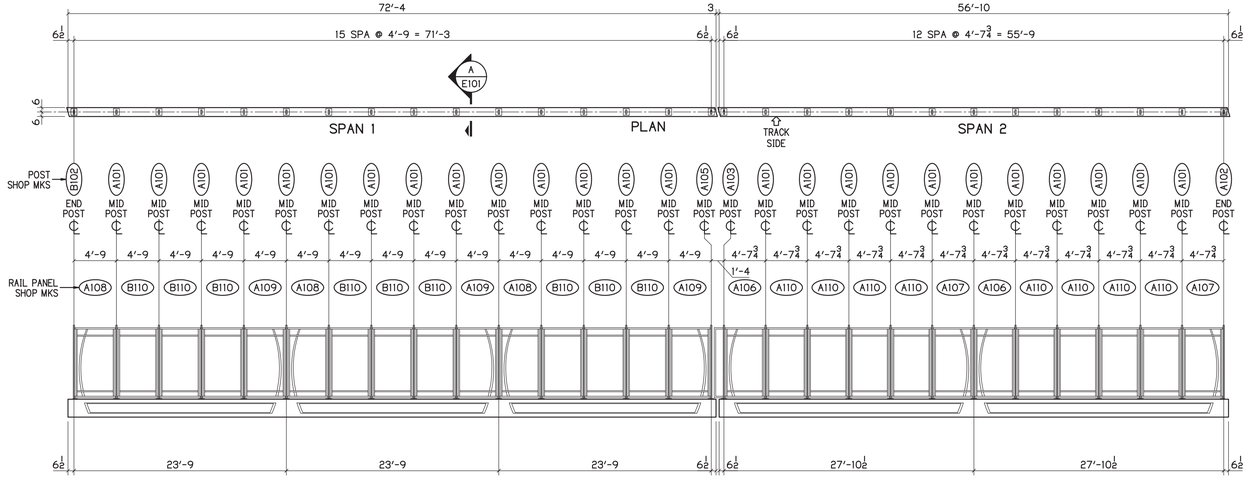

FENCE RAIL PLAN & ELEVATION

NORFOLK SOUTHERN RR BRIDGE - SOUTH PARAPET
TRACK SIDE SHOWN

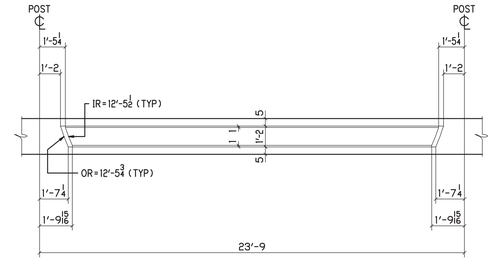

PARAPET AESTHETICS

SPAN 1

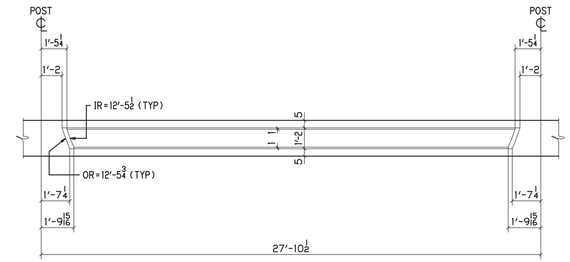

PARAPET AESTHETICS

SPAN 2

POST COUNT

QUAN	MARK
50	A101
2	A102
2	B102
1	A103
1	A104
1	A105
1	B105

RAIL COUNT

QUAN	MARK
4	A106
4	A107
6	A108
6	A109
16	A110
18	B110

STATE OF OHIO
ZEYN B. UZMAN
62564
REGISTERED PROFESSIONAL ENGINEER
8/4/21

BU-22 NSRR BRIDGE
FOR APPROVAL 06-18-21

P.H. DREW INC.
2450 N. RACEWAY RD. - P.O. BOX 34295
INDIANAPOLIS, INDIANA 46234
PHONE : (317) 297-5152
FAX : (317) 297-5313

APPROVAL

CUY-IR490 / SR010-2.09 / 19.28
DECORATIVE FENCE
FENCE RAIL LAYOUT

REVISION

REV	DATE	DESCRIPTION	BY
1	03-10-21	REV PER APP & RFI COMMENTS	MRH

APPROVAL RECORD

DATE	ISSUED	APP DATE	APPROVAL STATUS
11-01-20	APPROVAL	01-25-21	RESUBMIT
03-10-21	APPROVAL	04-13-21	RESUBMIT
04-13-21	APPROVAL	06-18-21	RESUBMIT
06-18-21	APPROVAL		

STATE	OHIO
COUNTY	CUYAHOGA (CITY OF CLEVELAND)
PROJECT	3000 (17)
CONTRACT	PID 96833
SECTION	
STRUCTURE	
STATE JOB	
CUSTOMER	LAKE ERIE CONSTRUCTION COMPANY
CONTRACTOR	
ARCH/ENG	
REFERENCE	
ITEM	
FINISH	SEE NOTES - SHT E100

DRAWN BY	CHECKED BY	MRH NO	JOB MGR	DWG STATUS	JOB NO.	TOTAL SHEETS	SHEET
MRH 04-07-20	SRF 06-15-21	1914	JL	APPROVAL 06-18-21	19-1108		E104

ALUMINUM HANDRAIL NOTES

1. ALL DIMENSIONS FOR RAIL ON PARAPET TAKEN FROM THE CENTER OF PARAPET AND RAIL.
2. SHOP MARKS FOR NORTH HANDRAIL ON LEFT END. SHOP MARKS FOR SOUTH HANDRAIL ON RIGHT END. HANDRAILS ARE INTERCHANGEABLE BETWEEN NORTH AND SOUTH.

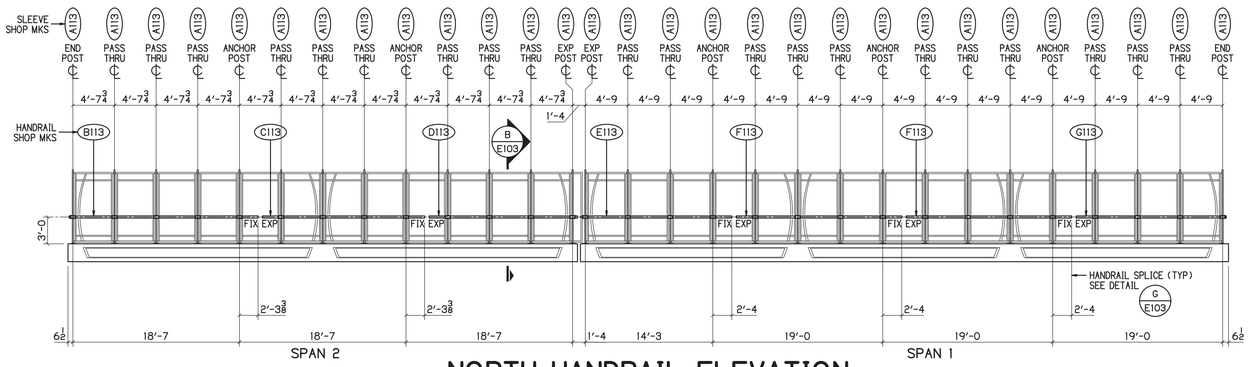

NORTH HANDRAIL ELEVATION

NORFOLK SOUTHERN RR BRIDGE - NORTH PARAPET
TRACK SIDE SHOWN

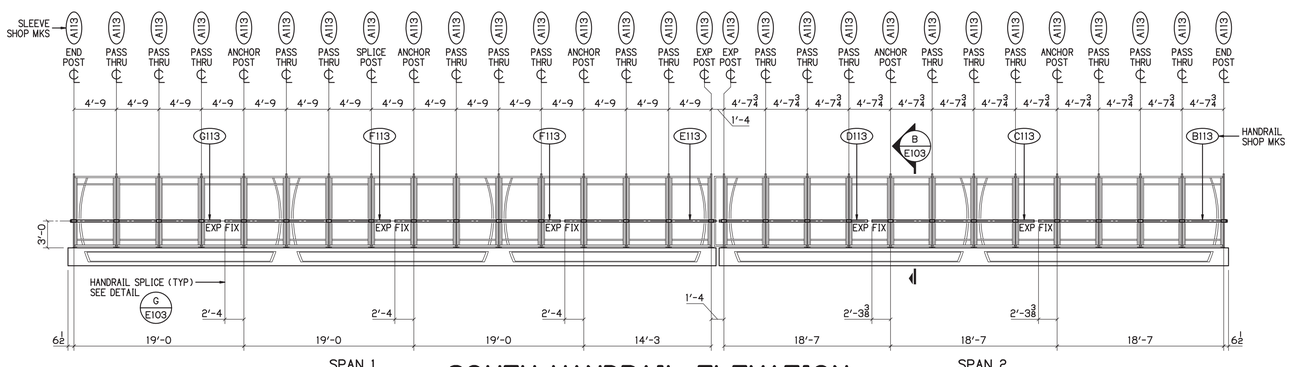

SOUTH HANDRAIL ELEVATION

NORFOLK SOUTHERN RR BRIDGE - SOUTH PARAPET
TRACK SIDE SHOWN

HANDRAIL COUNT

QUAN	MARK
2	B113
2	C113
2	D113
2	E113
4	F113
2	G113

BU-22 NSRR BRIDGE
FOR APPROVAL 06-18-21

P.H. DREW INC.
2450 N. RACEWAY RD. - P.O. BOX 34295
INDIANAPOLIS, INDIANA 46234
PHONE : (317) 297-5152
FAX : (317) 297-5313

APPROVAL

CUY-IR490 / SR010-2.09 / 19.28

DECORATIVE FENCE

ALUMINUM HANDRAIL LAYOUT

REVISION

REV	DATE	DESCRIPTION	BY
1	03-10-21	REV PER APP & RFI COMMENTS	MRH

APPROVAL RECORD

DATE	ISSUED	APP DATE	APPROVAL STATUS
11-01-20	APPROVAL	01-25-21	RESUBMIT
03-10-21	APPROVAL	04-13-21	RESUBMIT
04-13-21	APPROVAL	06-18-21	RESUBMIT
06-18-21	APPROVAL		

STATE	OHIO
COUNTY	CUYAHOGA (CITY OF CLEVELAND)
PROJECT	3000 (17)
CONTRACT	PID 96833
SECTION	
STRUCTURE	
STATE JOB	
CUSTOMER	LAKE ERIE CONSTRUCTION COMPANY
CONTRACTOR	
ARCH/ENG	
REFERENCE	
ITEM	
FINISH	SEE NOTES - SHT E100

DRAWN BY	CHECKED BY	MRH NO	JOB MGR	DWG STATUS	JOB NO.	TOTAL SHEETS	SHEET
MRH 04-07-20	SRF 06-15-21	1914	JL	APPROVAL 06-18-21	19-1108		E105

Submittal: 148

Revision:
Date Submitted: 5/27/2022
Response Due By:

kokosing CONSTRUCTION COMPANY, INC.
886 McKinley Ave.
Columbus, OH 43222
Phone: (614) 228-1029
Fax: (614) 228-7065

Project: 16051 - ODOT 173000 CUY IR 490/SR010 (OC3)
Description: New Sealing System for NS and E.89th

To: Julie Meyer, PE
Ohio Department of Transportation - District 12
Email: Julie.Meyer@dot.ohio.gov

From: Jacob Hasselbach
Kokosing Construction Company
Email: jhasselbach@kokosing.biz

Submittal Type:	Submitted For:
☐ Engineered Drawings	☒ Approval
☐ Shop Drawings	☐ Record
☐ Working Drawings	☐ Other
☐ CPM Schedule	
☐ Material Certifications / Test Results	**Sent Via:**
☐ Reports	☒ Attached (Electronic)
☐ Product Data/Samples	☐ Attached (Hard Copy)
☒ Other: Sealing Material Product Info	

Submittal #	Copies	Spec #	Rev. #	Description	
148	1			148 – New Sealing System for NS and E.89th	

Comments:

Please see attached PDF's and email chain concerning the new Tex-cote sealing system that will be used on the E.89th and NSRR structures

- Tex-cote XL-70 Bridgecote w/ Silane
- Tex-cote Graffiti Gard IV

Signed: Jacob E Hasselbach

TEX·COTE®
TEX-COTE LLC
Anti-Graffiti Coating Systems

GRAFFITI GARD® IV LOW LUSTER CLEAR OR PIGMENTED

DESCRIPTION

GRAFFITI GARD® IV is a low luster clear or pigmented non-sacrificial, two-component, water-based, high performance aliphatic urethane coating that resists graffiti from a variety of materials including spray paints and marking pens. In many cases, freshly applied wet spray paint or ink will actually crawl back on to itself, frustrating the would-be tagger into stopping and moving on to another target. The slick surface is easy to clean with GRAFFITI GARD® IV BIODEGRADABLE CLEANER followed by power washing.

FEATURES

- Simple to mix and apply
- Water-based formula
- Excellent graffiti resistance
- Excellent UV resistance
- Easy removal of graffiti
- Breathable coating.
- Low VOC
- Low luster finish

BENEFITS

- Protects surface against graffiti.
- Water repellant surface stays clean looking.
- Easy removal of graffiti
- Low VOC, able to be used in all states and jurisdictions.

RECOMMENDED OVER

Can be used over many interior and exterior vertical surfaces including bare concrete, split faced block, clean and sound previously coated concrete, brick, properly prepared previously coated metal, and other manufacturer approved surfaces.

APPLICATION

Application Equipment: Application of GRAFFITI GARD® IV LOW LUSTER CLEAR OR PIGMENTED can be done by brush, roller, or airless sprayer. When spraying product, proper respiratory protection is required. Airless sprayer should use .011 - .013 or super fine spray tip.

Surface Preparation: Proper surface preparation is essential to achieve the proper results with GRAFFITI GARD® IV LOW LUSTER CLEAR OR PIGMENTED. All surfaces must be clean, dry, and in sound condition. Remove all oil, dust, grease, dirt, and other foreign material to ensure proper adhesion. If the surface is previously painted, ensure that it is in sound condition and cleaned of all contaminants. Smooth or glossy coatings should be dulled by abrading the surface, and then all dust removed from the surface. In cases of directly applying to metal, cross-hatch adhesion tape test should be used to insure adequate bonding. Adjacent surfaces not to be coated must be masked.

Primer System: When applied to a porous concrete surface such as split-face block, the substrate should be primed with RAINSTOPPER 1750W Clear Sealer. Previously painted substrates do not need priming.

Application Rate: The actual application rate is dependent on the texture and absorbance of the surface being treated. Typical application rates will be 250-350 square feet per gallon for clear and 150-200 square feet per gallon for pigmented. Textured or absorbent surfaces will require additional material. **Apply in one coat, do not over apply film build as excessive thickness may create milky appearance through air entrapment.**

Mixing: GRAFFITI GARD® IV LOW LUSTER CLEAR OR PIGMENTED are two-component products that must be mixed together prior to the application. Open containers and add the clear Part B slowly while mixing into the Part A container (Note 5/gal kit requires mixing in two Part B containers). Mix approximately 2-3 minutes for uniform viscosity and full color development. Do not over mix or foam bubbles may be created. Once mixed, you will have 1-2 hour pot life to apply mixed product. The usable pot life is temperature dependent and is shorter at higher temperatures. Product should not be thinned or diluted.

Application: GRAFFITI GARD® IV LOW LUSTER CLEAR OR PIGMENTED should be applied in a timely manner, thus planning the application is important. A mock-up sample application is recommended for final approval by architect, engineer, or contractor of the surface appearance prior to starting project.

Safety: Apply with adequate ventilation. Follow all safety precautions including proper respiratory protection as noted in the Material Safety Data Sheet.

Clean-Up: Clean equipment promptly with soap and water.

GRAFFITI REMOVAL

Graffiti should be removed as soon as possible. Spray paint graffiti should be removed with GRAFFITI GARD® IV BIODEGRADABLE CLEANER followed by power washing. Cleaner should be applied by brush or roller, allow to remain on the surface 10 minutes, then scrubbed with a bristle brush, wait an additional 5 minutes, and power wash. Additional application of stripper may be necessary for complete graffiti removal. Graffiti not removed in the first few weeks may result in ghosting after cleaning.

REPAINTING

Prior to repainting or top coating GRAFFITI GARD® IV LOW LUSTER CLEAR OR PIGMENTED, abrading the surface substrate will be necessary. Light sanding or using steel wool are acceptable ways to remove the anti-graffiti properties.

©2021 Tex-Cote LLC For professional use only. Not for sale or use by the general public. 11/2021

BEST PERFORMANCE

- Follow all instructions closely for surface preparation, mixing, and application
- Adjacent surfaces not to be coated should be well masked.
- Apply under ideal weather conditions with temperatures between 50-90˚F.
- Shelf life is 6 months at room temperature. Containers should be stored upright and sealed.
- Periodic cleaning with a power-washer will remove any atmospheric dust or dirt residues and keep the surface fresh looking.
- Remove graffiti as soon as possible for greatest ease of removal.
- Allow a minimum cure time of 3 days (72 hours) to achieve anti-graffiti properties
- **Do not thin Part A or B, will affect performance and/or color**

TECHNICAL DATA

Physical Properties	Clear	Pigmented
Coverage Rate	250-350 sq ft / gallon	150-200 sq ft / gallon
Weight Percent Solids Mixed A&B	53-55%	55-57%
Density Part A	8.8 Typical	9.5 Typical
Density Part B	9.6 Typical	9.6 Typical
Density Mixed	9.0 Typical	9.5 Typical
Pot Life	> One hour	> One hour
VOC Mixed	<50 grams/ Liter	<50 grams/ Liter
Moisture Vapor Transmission (ASTM D1653)	6 perms	6 perms
Graffiti Cleanability (ASTM D7089)	100% Graffiti removal of black solvent spray paint cured for 24 hours.	100% Graffiti removal of black solvent spray paint cured for 24 hours.
Freeze/Thaw (ASTM C666)	Durability @ 300 Cycles—98.3% Weight Loss @ 300 Cycles—0% Surface Rating (Per C672) - No Scaling	Durability @ 300 Cycles—98.3% Weight Loss @ 300 Cycles—0% Surface Rating (Per C672) - No Scaling
Freeze/Thaw (ASTM C666) Modified with Saline	No visible change nor signs of cracking or delamination @ 300 cycles	No visible change nor signs of cracking or delamination @ 00 cycles
Accelerated Weathering (ASTM G154)	Observations @ 1500 Hours—No cracking, loss of adhesion or discoloration	Observations @ 1500 Hours—No cracking, loss of adhesion or discoloration
Chemical Resistance to Household Chemicals ASTM D1308	Exhibits excellent resistance to chemical agents when exposed	Exhibits excellent resistance to chemical agents when exposed
Gloss @ 60 Degrees	15-30	15-30

ORDER INFORMATION

Packaging:
GRAFFITI GARD® IV LOW LUSTER CLEAR OR PIGMENTED are two-component products that are available in either 0.9 gallon or five gallon kits. The kit is comprised of a Part A and Part B component. Note five gallon kit is comprised of 1 Part A component and 2 Part B components.

Shelf Life:
Six months in unopened containers. Store indoors and maintain temperature of 45-100˚F.

SAFETY

Use protective clothes, glasses, and gloves when mixing and applying. Use with adequate ventilation. When applying by spray, proper respiratory protective equipment must be worn. Follow recommendations on Material Safety Data Sheet.

VOC COMPLIANCE

All TEX-COTE® products comply with federal and state Volatile Organic Compound (VOC) rules and regulations. Please contact your nearest TEX-COTE LLC office for assistance on the local VOC compliance in the area of intended use.

WARRANTY

Upon completion of application of coating in accordance with the manufacturer's recommendations, TEX-COTE LLC will extend its limited commercial warranty for product replacement as a results of a defect in the material. The manufacturer must be notified prior to the application of the coating and the application must be in compliance with manufacturer's recommendations for installation. TEX-COTE LLC shall have no obligation to contribute or to otherwise participate in labor or cost associated with effecting repairs. Specimen copy of material warranty is available upon request.

TEX·COTE®
TEX-COTE LLC
CORPORATE OFFICES & EASTERN PLANT
2422 East 15th Street Panama City, Florida 32405
Tel: (850) 769-0347 Fax: (850) 913-8619

COMMERCIAL SALES OFFICE
4101 Ravenswood Road, Suite 218
Ft. Lauderdale, Florida 33312
Tel: (954) 581-0771 Fax: (954) 581-9516

WESTERN FACILITY
417 E. Weber Avenue
Compton, California 90222
Tel: (323) 233-3111 Fax: (310) 438-2873

©2021 Tex-Cote LLC For professional use only. Not for sale or use by the general public. 11/2021

TEX•COTE®
TEXTURED COATINGS OF AMERICA, INC.

Transportation Products

XL 70® BRIDGE COTE® W/SILANE

DESCRIPTION

TEX•COTE® XL70® BRIDGE COTE® with Silane is a one component, ready to use concrete protective coating. This material is utilized for the protection and beautification of bridges and above-grade exterior surfaces, such as concrete walls, columns, spandrels, median dividers, bridge parapets, retaining walls, etc.

FEATURES

- Cure/Seal/Coat in One Application
- Long term performance, with Silane performance benefits
- TTC-555b weather compliance
- Aesthetics--Uniformity, factory mixed
- Variety of textures and colors
- Excellent adhesion to concrete

BENEFITS

- Cost savings as compared with hand rubbing concrete.
- Broad range of temperature application
- One coat application over certain surfaces
- High build textured coating
- Can be applied over damp concrete

RECOMMENDED OVER

Properly prepared new pre-cast, tilt-up, or poured concrete and other manufacturer approved substrates.

APPLICATION

For spraying, use a Graco President 10:1 pump or GM 1030 pump. Refer to the TEX•COTE® application manual for further information.

Roll On Application:

Overall appearance depends on application technique. Mock-up sample for engineer/owner approval is recommended. Short, medium or long nap rollers may be used for standard application depending on texture desired.

Surface Preparation

Surface preparation by the general contractor, prior to the application of the concrete coating, shall consist of general surface finish in accordance with the specific requirements of the state transportation department or governmental agency. Surface to be coated shall be free from efflorescence, flaking coatings, oil, curing compounds, release agents and other laitences prior to the application of the concrete coating. Curing compound and release agent must be removed and may require light sandblast or water blast at a minimum of 2500 PSI or greater. Test the wall for coating acceptability prior to application of coating. This can be done by spraying the wall with water.

If the water soaks into the wall, the wall is properly prepared, and can be coated when dry. If the water beads up and is repelled, the wall requires further cleaning prior to application of the coating. Sack and patch shall not be applied over the coating. This practice may void warranty. All sacking and patching should be completed prior to coating application. Application rate 50+/- 10 sq ft /gallon.

Spray / Roll On

Manufactured to meet Federal Specification TTC- 555B and various performance tests. A one-coat application at 50 sf/gallon develops a 15-mil dry film thickness. The approved coverage rate for TEX•COTE® XL70® BRIDGE COTE® with Silane may vary in different states and regions. Please consult the governing transportation department or governmental agency for their requirements.

Additional Applications

TEX•COTE® XL70® BRIDGE COTE® with Silane may be applied over RAINSTOPPER® Silane or Siloxane penetrant sealers. Also, TEX•COTE® GRAFFITI GARD® Protection Systems may be used over TEX•COTE® XL70® BRIDGE COTE® with Silane after a minimum of 21 days cure under ideal conditions. Consult your local representative for proper application procedures and specifications.

Clean-Up

Use mineral spirits to clean up wetmaterial; use Methyl Ethyl Ketone (MEK) or acetone for dry.

Drying / Curing Times

To touch: 48 hours

Final Cure: 2-3 weeks, minimum

Note: These times based on ideal weather conditions.

BEST PERFORMANCE

1. Do not thin XL70® BRIDGE COTE® with Silane, do not use as grout.
2. Do not mix XL70® BRIDGE COTE® with Silane in drum with other types of paint.
3. Agitate XL70® BRIDGE COTE® with Silane thoroughly prior to use.
4. May be applied over a damp, but not wet with liquid water, surface.
5. Application temperature is above 40°F (7.2°C) and rising, not exceeding 100°F (37.8°C).
6. Do not apply if rain is imminent or over frozen surface.
7. Backside of retaining walls shall be waterproofed with asphalt type below grade sealer.
8. TCA does not promote coating the sealant joints, nor is the sealant compound an approved substrate.
9. In cool weather conditions, 5-gallon pails are recommended for ease of use.

©2017 Textured Coatings of America, Inc. For professional use only. Not for sale or use by the general public. 08/2017

TECHNICAL DATA

Table 1

- Federal Specification TTC-555B
- ASTM C672-Scaling Resistance – 100 Cycles
- ASTM C642 - Absorption-Passed
- AASHTO T259/T260 Chloride Ion - Penetration Resistance
- ASTM G153 Twin Arc Weatherometer Exposure – 5,000 Hours
- ASTM C522 Mandrel Bend, 1" Conical, No Cracking
- ASTM C309/AAHSTO M148 Type II, Curing Compound Requirement - Pass
- ASTM D5860 Mississippi Highway Department Freeze /Thaw Method – 300 Cycles
- ASTM B-117 Salt Spray Resistance 2,000 hours
- ASTM D968 Abrasion Resistance – 2,000 liters – Falling Sand—No Penetration
- Infrared Spectrum – Typical
- TTP-29 Fungus Growth Resistance 21 Days – Passed
- NCHRP 244 Series IV, Southern Exposure – Passed
- NCHRP 244 Series II – Passed
- ASTM D1653 Water Vapor Transmission—15.01

Table 2

Solvent	Aliphatic
Solids, by Weight	71 % Typical
Solids, by Volume	57.0% Typical
Weight per gallon	10.0 lbs.
VOC Content	<400 grams/liter

ORDER INFORMATION

Colors

Available in TEX•COTE® standard decorative colors, Federal shade colors, and custom colors upon request.

Textures

Available in Smooth, Sand and Coarse Textures.

Container Size

Five (5) gallon pails and thirty (30) and fifty-five (55) gallon drums.

Shelf Life

Twelve (12) month shelf life if containers are sealed, upright and stored in a dry place out of the sun. Maintain temperature at 45°F and rising to 100°F (7°C to 38°C); avoid freezing. Any skins formed on surface of material must be removed prior to moving containers or mixing.

SAFETY

Warning

Combustible liquid and vapor. Keep away from heat and flames. Contains petroleum distillates, crystalline silica and lime. Vapor harmful. Use with adequate ventilation. View Material Safety Data Sheet before using material. Smoking in area where this material is used should be strictly prohibited. Keep out of reach of children.

First aid

If you experience difficulty in breathing, leave the area to obtain fresh air. If continued difficulty is experienced, get medical attention immediately. In case of eye contact, flush immediately with plenty of water for at least 15 minutes and get medical attention. For skin, wash thoroughly with soap and water. If swallowed, get medical attention immediately. Do not induce vomiting.

VOC COMPLIANCE

All TEX•COTE® products comply with federal and state Volatile Organic Compound (VOC) rules and regulations. Please contact your nearest TCA office for assistance on the local VOC compliance in the area of intended use.

WARRANTY

Upon completion of application of coating in accordance with the manufacturer's recommendations, Textured Coatings of America, Inc. will extend its limited commercial warranty for product replacement as a results of a defect in the material. The manufacturer must be notified prior to the application of the coating and the application must be in compliance with manufacturer's recommendations for installation. TEX•COTE® shall have no obligation to contribute or to otherwise participate in labor or cost associated with effecting repairs. Specimen copy of material warranty is available upon request.

TEX•COTE®
TEXTURED COATINGS OF AMERICA, INC.

CORPORATE OFFICES & EASTERN PLANT
2422 East 15th Street Panama City, Florida 32405
Tel: (850) 769-0347 Fax: (850) 913-8619

COMMERCIAL SALES OFFICE
4101 Ravenswood Road, Suite 218,
FT. Lauderdale, Florida 33312
Tel: (954) 581-0771 Fax: (954) 581-9516

WESTERN PLANT
5950 S. Avalon Blvd.
Los Angeles, California 90003
Tel: (323) 233-3111 Fax: (323) 232-1071

©2017 Textured Coatings of America, Inc. For professional use only. Not for sale or use by the general public. 08/2017

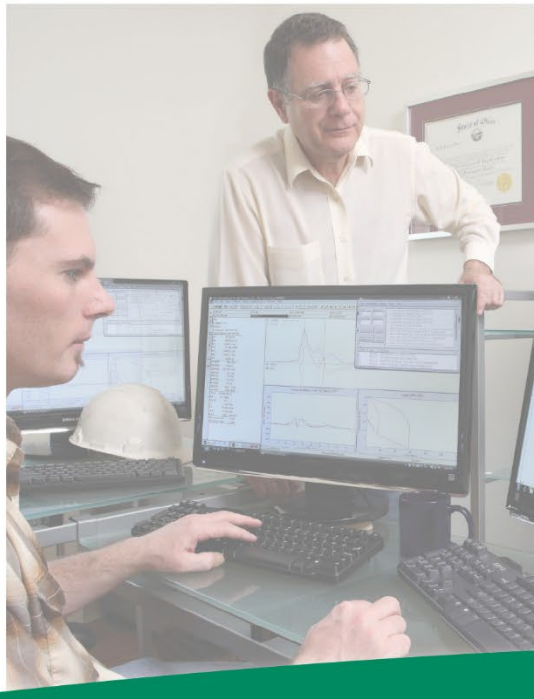

GRL engineers, inc.

Dynamic Measurements and Analyses

Job No. 195067-3

Report on: Thermal Integrity Profiling

Project: Opportunity Corridor 3 CUY-10-2039

Cleveland, OH

Prepared for: Kokosing Constuction Company

By: Benjamin White, P.E.
C. Michael Morgano, P.E.

October 6, 2025

October 6, 2025

Mr. Marty Fritz
Kokosing Construction Company
886 McKinley Ave.
Columbus, OH 43222

Re: Thermal Integrity Profiling Report
Project: Opportunity Corridor 3 Bridge CUY-10-0239 – Rear Abutment – Phase 1
Cleveland, OH

GRL Job No. 195067-3

Mr. Fritz:

This report presents the results of Thermal Integrity Profiling (TIP) using Thermal Wire® cables for the above-referenced project. The objective of TIP testing was to assess the integrity of 10 drilled shafts at the rear abutment location of the CUY-10-0239 structure which carries OH-10 over the Norfolk Southern RR. The TIP data summarized in this report was recorded between December 17th, 2019 and January 9, 2020.

THERMAL INTEGRITY PROFILING – INSTRUMENTATION AND ANALYSIS

Thermal Integrity Profiler (TIP) testing was performed by means of Thermal Wire® cables and Thermal Acquisition Ports (TAPs). The TIP system, manufactured by Pile Dynamics, Inc. in association with FGE, reads concrete temperatures during curing using cables embedded in the concrete.

The Thermal Wire cables consist of temperature sensors spaced every foot along the length of a cable. For these shafts, four Thermal Wire® cables were attached along the full length of the reinforcing cage. After the concrete placement was complete, a TAP-EDGE data logger was connected to each wire and data acquisition began.

During curing of the concrete, the hydrating cement generates heat, increasing the temperature in the shaft. Every 15 minutes the TAP-EDGE data loggers automatically record the measured temperature at each sensor location along the length of the wire, generating a profile of temperature versus depth at each increment of time. The data is then sent to a cloud server where GRL can access the data. After the concrete peak temperature has been achieved, the data is downloaded for further analysis.

The TIP results may be evaluated for shaft shape and integrity, concrete quality, and for location of the reinforcing cage. The overall average temperature for all Thermal Wire readings over the embedded depths can be directly related to the overall volume of concrete installed. Pile integrity may be assessed based on the average temperature measurements from each Thermal Wire at each depth increment. If the measured average temperature versus depth is consistent, the shaft is considered to be uniform in shape and quality. Bulges can be identified as localized increases in average temperature, while insufficient concrete quality or cross section reductions can be identified as localized decreases in average temperature. Anomalies present over more than ten percent of the effective cross-sectional area are normally seen in multiple Thermal Wires at the same depth. Because soil and/or slurry pockets produce no heat, areas of soil intrusion or inclusion are indicated by lower local temperatures.

Appendix A provides additional information regarding the technical background and implementation of the TIP drilled foundation integrity testing method.

SHAFT DETAILS

Please refer to the construction records for complete details.

GRL Engineers was provided shaft information through field logs which are attached in Appendix C for reference. The reported shaft lengths and details are summarized in Table 1.

Table 1. Reported Shaft Installation Details

Shaft Number	Concrete Placement Date	As-Built Shaft Diameter Shaft/socket (in)	Rebar Cage Diameter (in)	Reported Total Shaft Length (ft)	Concrete Volume Input for Analysis (yd^3)
29	12/17/19	50/50	44	26.0	16
30	12/16/19	50/50	44	26.1	16
31	12/11/19	50/50	44	27.1	16
32	12/16/19	50/50	44	27.1	16
33	12/11/19	50/50	44	27.0	16
34	12/13/19	50/50	44	27.1	16
35	12/10/19	50/50	44	27.1	16
36	12/12/19	50/50	44	27.1	16
37	12/6/19	50/50	44	27.1	16
38	12/12/19	50/50	44	27.2	16

RESULTS

TIP results for the tested shaft include the measured temperature and calculated effective radius versus depth. The effective radius calculations were based on the measured Thermal Profile and the input concrete volume. The measured Thermal Profiles present the measured temperature versus depth for each active sensor at the selected time interval.

The optimal time selected for the pile profile corresponds approximately to near the time when the maximum temperature occurs. The time to near peak temperature and also the time selected for analysis for these shafts was approximately 16 to 24 hours after placement.

In general, temperature variations of +/- .9 degrees Fahrenheit are within normal range for TIP results due to the accuracy of the sensors. Anomalies would be indicated by abrupt reductions in temperature at a particular depth.

The TIP results are presented in Appendix B. The top left plot present the Measured Temperature (degrees Fahrenheit) vs. Depth (feet). Temperature roll-off at the bottom of a shaft is caused by heat loss due to the concrete/soil interface. Temperature roll-off at the top of pile is caused by heat loss due to the concrete/air interface. The top right plot displays the Estimated Effective Radius (inches) vs. Depth (feet). The bottom right plot displays a 2-D interpretation of the shaft. The rebar cage is displayed as a 2-D color spectrum with an overlay of projected pile exterior surface. The bottom left figure is a general soil profile with a 2-D shaft exterior overlay.

GRL has interpreted and categorized the results employing the following criteria:

- **Satisfactory** **(S)** 0 to 6% Effective Average Radius Reduction and Cover Criteria Met
- **Anomaly** **(A)** Effective Average Radius Reduction > 6% (Max Red %) **or** Cover Criteria Not Met (Further Evaluation Required)

When a tested shaft is deemed Anomaly (A), slices modeled at the area of question may be provided so that a structural evaluation of the shaft can be performed prior to implement any corrective measurements.

All 10 shafts in phase 1 of the rear abutment are categorized as Satisfactory (S). Descriptions of the Thermal Integrity Profiling results are presented below.

Shaft 29

The temperature profile for this shaft indicates a fairly constant temperature throughout the shaft with the measured temperature slightly cooling within the rock socket. The temperature roll offs at the top and bottom appear consistent with the shaft radius.

Based on the thermal integrity profiling results the effective radius is generally slightly oversized throughout the uncased portion above the rock socket. The effective radius in the rock socket is generally consistent with the design radius.

The rebar cage appears to be fairly well centered and the concrete cover generally exceeds 3 inches along the length of the shaft.

The overall thermal signature, based on the Temperature (degrees Fahrenheit) vs. Depth (feet) graph indicates the shaft is continuous with no reductions in the temperature indicative of major anomalies observed over the tested length. Based on the rating criteria noted above, this pile was categorized as **Satisfactory (S).**

Shaft 30

The temperature profile for this shaft indicates a fairly constant temperature throughout the shaft with the measured temperature slightly cooling within the rock socket. The temperature roll offs at the top and bottom appear consistent with the shaft radius.

Based on the thermal integrity profiling results the effective radius is generally slightly oversized throughout the uncased portion above the rock socket. The effective radius in the rock socket is generally consistent with the design radius.

The rebar cage appears to be fairly well centered and the concrete cover generally exceeds 3 inches along the length of the shaft.

The overall thermal signature, based on the Temperature (degrees Fahrenheit) vs. Depth (feet) graph indicates the shaft is continuous with no reductions in the temperature indicative of major anomalies observed over the tested length. Based on the rating criteria noted above, this pile was categorized as **Satisfactory (S).**

Shaft 31

The temperature profile for this shaft indicates a fairly constant temperature throughout the shaft with the measured temperature slightly cooling within the rock socket. The temperature roll offs at the top and bottom appear consistent with the shaft radius.

Based on the thermal integrity profiling results the effective radius is generally slightly oversized throughout the uncased portion above the rock socket. The effective radius in the rock socket is generally consistent with the design radius.

The rebar cage appears to be well centered and the concrete cover generally exceeds 3 inches along the length of the shaft.

The overall thermal signature, based on the Temperature (degrees Fahrenheit) vs. Depth (feet) graph indicates the shaft is continuous with no reductions in the temperature indicative of major anomalies observed over the tested length. Based on the rating criteria noted above, this pile was categorized as **Satisfactory (S).**

Shaft 32

The temperature profile for this shaft indicates a fairly constant temperature throughout the shaft with the measured temperature slightly cooling within the rock socket. The temperature roll offs at the top and bottom appear consistent with the shaft radius.

Based on the thermal integrity profiling results the effective radius is generally slightly oversized throughout the uncased portion above the rock socket. The effective radius in the rock socket is generally consistent with the design radius. However, in the bottom 1 foot, the effective radius reduces to below the shaft radius slightly. The reduction does not reach the 6% threshold proposed above, therefore this area is not cause for concern.

The rebar cage appears to be well centered and the concrete cover generally exceeds 3 inches along the length of the shaft.

The overall thermal signature, based on the Temperature (degrees Fahrenheit) vs. Depth (feet) graph indicates the shaft is continuous with no reductions in the temperature indicative of major anomalies observed over the tested length. Based on the rating criteria noted above, this pile was categorized as **Satisfactory (S).**

Shaft 33

The temperature profile for this shaft indicates a fairly constant temperature throughout the shaft with the measured temperature slightly cooling within the rock socket. The temperature roll offs at the top and bottom appear consistent with the shaft radius.

Based on the thermal integrity profiling results the effective radius is generally slightly oversized throughout the uncased portion above the rock socket. The effective radius in the rock socket is generally consistent with the design radius.

The rebar cage appears to be fairly well centered and the concrete cover generally exceeds 3 inches along the length of the shaft.

The overall thermal signature, based on the Temperature (degrees Fahrenheit) vs. Depth (feet) graph indicates the shaft is continuous with no reductions in the temperature indicative of major anomalies observed over the tested length. Based on the rating criteria noted above, this pile was categorized as **Satisfactory (S).**

Shaft 34

The temperature profile for this shaft indicates a fairly constant temperature throughout the shaft with the measured temperature slightly cooling within the rock socket. The temperature roll offs at the top and bottom appear consistent with the shaft radius.

Based on the thermal integrity profiling results the effective radius is generally slightly oversized throughout the uncased portion above the rock socket. The effective radius in the rock socket is generally consistent with the design radius.

The rebar cage appears to be fairly well centered and the concrete cover generally exceeds 3 inches along the length of the shaft.

The overall thermal signature, based on the Temperature (degrees Fahrenheit) vs. Depth (feet) graph indicates the shaft is continuous with no reductions in the temperature indicative of major anomalies observed over the tested length. Based on the rating criteria noted above, this pile was categorized as **Satisfactory (S).**

Shaft 35

The temperature profile for this shaft indicates a fairly constant temperature throughout the shaft with the measured temperature slightly cooling within the rock socket. The temperature roll offs at the top and bottom appear consistent with the shaft radius.

Based on the thermal integrity profiling results the effective radius is generally slightly oversized throughout the uncased portion above the rock socket. The effective radius in the rock socket is generally consistent with the design radius.

The rebar cage appears to be well centered and the concrete cover generally exceeds 3 inches along the length of the shaft.

The overall thermal signature, based on the Temperature (degrees Fahrenheit) vs. Depth (feet) graph indicates the shaft is continuous with no reductions in the temperature indicative of major anomalies observed over the tested length. Based on the rating criteria noted above, this pile was categorized as **Satisfactory (S).**

Shaft 36

The temperature profile for this shaft indicates a fairly constant temperature throughout the shaft with the measured temperature slightly cooling within the rock socket. The temperature roll offs at the top and bottom appear consistent with the shaft radius.

Based on the thermal integrity profiling results the effective radius is generally slightly oversized throughout the uncased portion above the rock socket. The effective radius in the rock socket is generally consistent with the design radius.

The rebar cage appears to be fairly well centered and the concrete cover generally exceeds 3 inches along the length of the shaft.

The overall thermal signature, based on the Temperature (degrees Fahrenheit) vs. Depth (feet) graph indicates the shaft is continuous with no reductions in the temperature indicative of major anomalies observed over the tested length. Based on the rating criteria noted above, this pile was categorized as **Satisfactory (S).**

Shaft 37

The temperature profile for this shaft indicates a fairly constant temperature throughout the shaft with the measured temperature slightly cooling within the rock socket. The temperature roll offs at the top and bottom appear consistent with the shaft radius.

Based on the thermal integrity profiling results the effective radius is generally slightly oversized throughout the uncased portion above the rock socket. The effective radius in the rock socket is generally consistent with the design radius.

The rebar cage appears to be well centered and the concrete cover generally exceeds 3 inches along the length of the shaft.

The overall thermal signature, based on the Temperature (degrees Fahrenheit) vs. Depth (feet) graph indicates the shaft is continuous with no reductions in the temperature indicative of major anomalies observed over the tested length. Based on the rating criteria noted above, this pile was categorized as **Satisfactory (S).**

Shaft 38

The temperature profile for this shaft indicates a fairly constant temperature throughout the shaft with the measured temperature slightly cooling within the rock socket. The temperature roll offs at the top and bottom appear consistent with the shaft radius.

Based on the thermal integrity profiling results the effective radius is generally slightly oversized throughout the uncased portion above the rock socket. The effective radius in the rock socket is generally consistent with the design radius.

The rebar cage appears to be well centered and the concrete cover generally exceeds 3 inches along the length of the shaft.

The overall thermal signature, based on the Temperature (degrees Fahrenheit) vs. Depth (feet) graph indicates the shaft is continuous with no reductions in the temperature indicative of major anomalies observed over the tested length. Based on the rating criteria noted above, this pile was categorized as **Satisfactory (S).**

ADDITIONAL CONSIDERATIONS

Uncertainties in the interpreted TIP results include calculated corrections for pile top and bottom shape which depend on the air and the annual average soil temperature, respectively. Other factors include variations in the thermal diffusivity of the soil around the pile and the reinforcing cage which may have undergone movement during concrete placement. Furthermore, inaccuracies in the observed, installed concrete volumes may cause errors in calculated radii and 3-D pile shape interpretations. These factors limit the direct, unquestioned use of the results presented in this report for pile suitability. We recommend that the responsible engineer(s) use the TIP results in conjunction with the soil borings, pile construction/inspection records, results from other test methods, and foundation loading information to determine foundation acceptability with respect to design requirements.

We appreciate the opportunity to be of assistance to you on this project. Please contact us if you have any questions regarding this report, or if we may be of further service.

Sincerely,
GRL Engineers, Inc.

Benjamin White, P.E.

C. Michael Morgano, P.E.

Appendix A: Thermal Integrity Profiling

1.1 Test Method Overview

The Thermal Integrity Profiler (TIP) uses the temperature generated by curing cement (hydration energy) to assess the quality of cast in place concrete foundations (i.e. drilled shafts, Auger-cast-in-place (ACIP) or Continuous flight auger (CFA) piles). Whereas other methods of integrity testing have limits in assessing the full cross-section or length (Cross-Hole Sonic Logging (CSL): inside the reinforcing cage, or Gamma-gamma Logging (GGL): within 3 inches (75mm) of access tube: Pile Integrity Testing (PIT): length limits or after major section changes), TIP measurements evaluate the concrete quality from all portions of the cross-section along the entire length.

In general, a shortage of competent concrete is registered by relative cool regions (e.g. necks or inclusions); the presence of extra concrete is registered by relative warm regions (e.g. over-pour bulging into soft soil strata).

Anomalies both inside and outside the reinforcing cage not only disrupt the temperature signature near the anomaly, but also at more distant locations at progressively less effect.

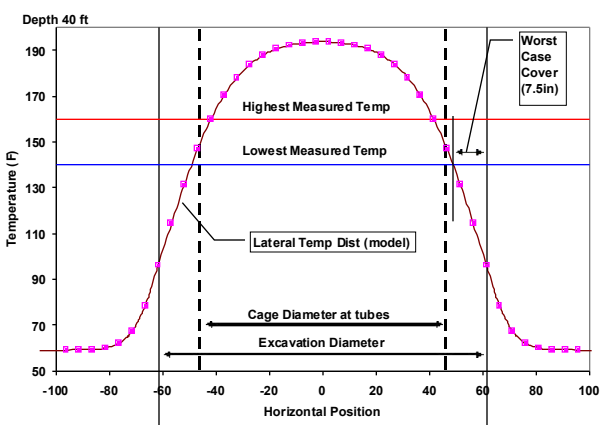

Figure A: Temperature distribution for 10 ft (3.03 m) diameter shaft. Lowest temperature measured corresponded to a 7.5 in (19 cm) cover

The shaft temperature is dependent on the shaft diameter, mix design, and the time of measurement.

Because the temperature distribution within a shaft is bell-shaped with respect to radial position (Figure A), the measurements are sensitive to cage eccentricity as well as the surrounding cover. A cage closer to one side of the excavation exhibits cooler temperatures than average when the cage is closer to the soil. When the cage is closer to the shaft center, temperatures are then warmer.

Since the diameter and temperature relationship is strongly linear in the region of the cage, a plot of the average temperature of the entire cage versus depth mimics the actual shape of the shaft as determined from field concreting logs. Use of construction and concreting logs can be used in concert with the TIP data to better assess the overall quality of a given shaft (Figure B).

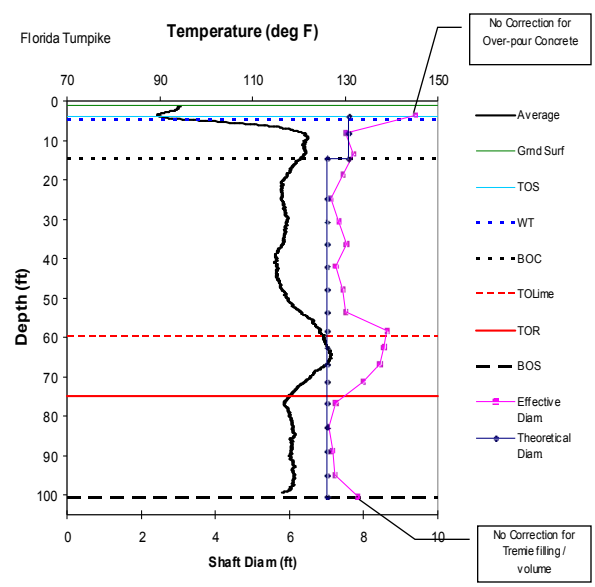

Figure B: Average shaft temperature (black) and effective diameter computed from concreting log (pink with square markers)

1.2 Data Collection

TIP data is obtained either using probes in access tubes or using embedded THERMAL WIRES®.

Figure C: Thermal Integrity Profiling (Probe method).

1.2.1 The TIP system – Probe method

The TIP probe uses four orthogonally oriented infrared sensors within a single thermal probe (Figure D) to measure the inside wall temperature of standard 1.5 or 2.0 inch (38 or 50 mm) access tubes (plastic or steel). Four sensors provide redundancy. The probe diameter is 1.25 inches (32 mm)

Figure D: 5 in. long by 1.25 in. diameter Thermal Probe with four infrared sensors

A depth-encoder attached to the access tube tracks the probe location as it is lowered by the engineer for the entire length of each tube (access tubes must be free of water debris and other liquids during testing). The temperature data are collected typically 12 to 48 hours after concrete casting, depending on shaft diameter and concrete mix. TIP results are insensitive to de-bonding.

1.2.2 The TIP system – Thermal Wire method

The embedded sensor method uses wires with thermal sensors attached to the reinforcing cage (Figure E). No access tubes are required. Data is automatically sampled at specified intervals (generally every 15 minutes) from each embedded THERMAL WIRE cable by a battery powered Thermal Acquisition Port (TAP) allowing the concrete curing process to be monitored. Data can be collected on site at any time after casting for evaluation. A single embedded wire is attached to a center rebar for smaller augercast (CFA) piles, soil nails, micropiles and jet-grouted applications.

Figure E: Embedded THERMAL WIRE cable attached to rebar cage (shown adjacent to CSL access tubes.)

Should an anomaly be detected (local relatively cool spot) by either probes or embedded THERMAL WIRE cables, no additional field data is necessary to perform complete in-depth analyses.

1.3 Data Analysis

Field measurements alone highlight glaring irregularities since the average temperature profile shows the general shaft shape. This level of simple review reveals cage alignment irregularities, casing location, locations of over-pour bulges or necking or deficient concrete, and can easily alert the user or an owner of areas of concern.

Superposition of construction and concreting logs can calibrate the average diameter to the overall average temperature, particularly when multiple concrete trucks per pile are used.

Finally, the measured temperatures when converted to radius can be used to provide a 3-D rendering (Figure F) of the as-built shaft as well as 2-D slices (Figure G) of the shaft cross section at any depths of interest and vertical slices through any radial orientation.

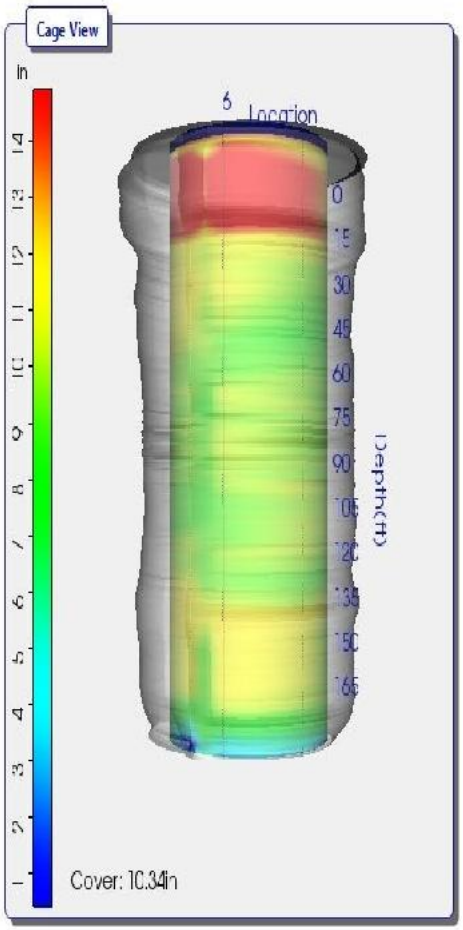

Figure F: 3-D projection of shaft

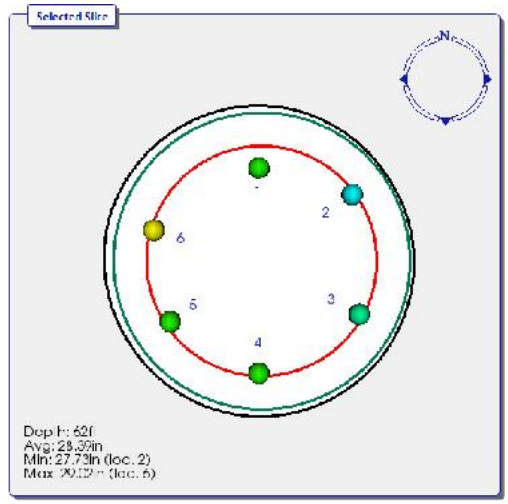

Figure G: horizontal 'slice' of the shaft

1.3.1 Roll-off Modelling

The TOS/BOS Correction window allows the user to model the 'roll-off' observed typically at the top and bottom of the shaft. Note that for a majority of the shaft the heat is dispersed only in the radial direction, however for a length corresponding to one diameter at both the upper and lower portion of the shaft, or any large diameter change, the heat is dispersed not just in a radial pattern, but also in a longitudinal direction. This occurs because the heat is not just conducted into the laterally surrounding soil but also, for the top of shaft, radiates into the ambient air; and for the bottom of shaft, into the soil beneath the shaft. Because of this, proper analysis and interpretation of Thermal Integrity results requires a correction for this region of the shaft where the temperatures are non-linear. It should be noted that the surrounding soil receives the heat that the shaft radiates and thus becomes warm. The soil is warmest at the shaft interface and gradually cools as the radial distance from the shaft center increases.

The roll-off at the shaft ends for a uniform shaft follows a hyperbolic tangent curve. If we superimpose this curve on the measured temperature curve in the roll-off zone, the difference between these curves is then due to differences in the actual shaft shape relative to the uniform cylindrical shape, allowing us to compute the estimated actual shape.

Corrections made at the top and bottom of the shaft will estimate the region of non-linear temperatures due to the roll-off by applying an estimated curve based of the ambient soil temperature, ambient air temperature, and average concrete temperature. Note that roll-off correction is a 'best-fit' correction.

1.3.2 Effective Radius

In many cases, simple presentation of the temperatures versus depth may be satisfactory. For example, the total installed volume is known to be substantially greater than the theoretical neat volume of the hole (nominal area times nominal length) and the temperature profiles are relatively uniform, with normal top and bottom temperature roll-off observed.

If unusual features are observed in the data (local cool temperatures or significant cage shifts, or if project specifications require, then further analysis is generally performed to obtain an "***effective radius***" versus depth versus quadrant. The "***effective radius***" is "expected" to be the designed shaft radius which may actually be the radius of the tool or the radius of a casing. As the measured temperature is proportional to the local radius and cover, such a correlation is produced to estimate the effective radius from temperature measurements and the total volume of placed concrete. The term "***effective radius***" was coined to address the scenario where concrete quality may be varying instead of shaft shape. To that end, ***effective radius is defined as that radius of intact uncompromised concrete that would produce the measured temperature***.

In order to properly interpret data into an "***effective radius***" presentation, a significant amount of information should be gathered. Thermal data is collected into the TIP main unit and includes the thermal arrays and descriptions of geometries (nominal radius, nominal cage radius, spacing between measurement locations, etc.)

Other pertinent information would include soil borings, Thermal field logs, drilling logs that would include any pertinent diameter changes, casing lengths (permanent or temporary), and any unusual occurrences, and logs of concrete placement (preferably vs depth). If the shaft extends above the ground or is cased through water zone, these affect this cooling of the upper portion of the shaft, and therefore data interpretation. It should be noted that the diffusivity of heat transfer in the soil is relatively unaffected by the soil type or water table as the heat generation is significantly higher and drives the process (at least through the temperature rise portion of the heating and cooling cycle). Obviously the more information available the better qualified the result answer that can be achieved.

1.4 Disclaimer

As Thermal Integrity Profiling is based on the heat generated during the concrete hydration process, the test method is then highly dependent on acquiring data early in the hydration process, generally slightly before or after the point in time the shaft reaches peak heat. The point in time which peak heat occurs is dependent on actual shaft diameter and actual concrete mix design.

As with most Non-Destructive methods of pile material testing, results are not always a clear indication of the strength of a shaft. A variety of error sources or limitations can mask some of the defects while exaggerating others. It is therefore suggested that the TIP results are always used together with other records of shaft installation and that they are not used as the sole basis for shaft rejection or shaft acceptance.

As 'Roll-off' regions in the shaft are subject to ambient atmospheric conditions as well as ambient soil temperatures, the modelling is dependent on the accuracy of such information. Additionally, where the bottom 'roll-off' occurs is dependent on where the lowest thermal measurement has occurred and the actual bottom of the shaft.

As the Effective Radius estimation is highly dependent on concrete volume measurements, the accuracy of the effective radius is thus equally dependent on those volume measurements. Shafts with little volume

information, particularly in the case of small and/or short shafts which may require concrete volumes less than one truck load, may have a tendency to over-predict the effective radius.

If Modelling of the concrete mix design is employed the results of such modelling are dependent on the accuracy of the information given and the actual mixture placed

Shafts with multiple or highly variable impedance (cross section) changes produce complex records which are difficult or impossible to analyze after the first major or second smaller reflection.

Lack or discontinuities in reinforcement cannot be detected

It should be noted, as with many other non-destructive test methods, that the method can only assess shaft integrity and makes no qualifications on the suitability of the shafts load carrying capacity.

1.5 Corrective Measures

A limited number of corrective measures are available when a defect is indicated by the TIP method. Such measures include:

•Static load testing to prove the shaft integrity to be adequate. This is often the most expensive alternate and not well suited for testing large numbers of shafts.

•Dynamic Load Testing (DLT) with a Pile Driving Analyzer® which would yield evidence of satisfactory shaft performance under the dynamic load, which is typically in the range of the shaft's service loads.

•If access tubes are installed in the shaft. Testing by CSL, if defects are located with the direct path of the access tube combinations, may confirm the presence of defect.

•Sonic Pulse Echo testing with the Pile Integrity Tester™ (PIT) as an additional method of non-destructive testing.

•Coring of the shaft. Besides yielding a concrete core, video cameras can be used in the cored hole for a visual inspection of the shaft concrete.

•Repair by grouting high strength reinforcement bars in the access tubes. This is only possible if the tubes are made of steel.

•Pressure grouting the shaft either by piercing the tubes or by cored access holes.

Appendix B: Thermal Integrity Profiling Results

Opportunity Corridor 3

Bridge CUY-10-2039 Norfolk Southern RR over OH-10

Rear Abutment Phase 1 - Shafts 29 though 38

Thermal Integrity Profiling Results

Rear Abutment Shaft 29

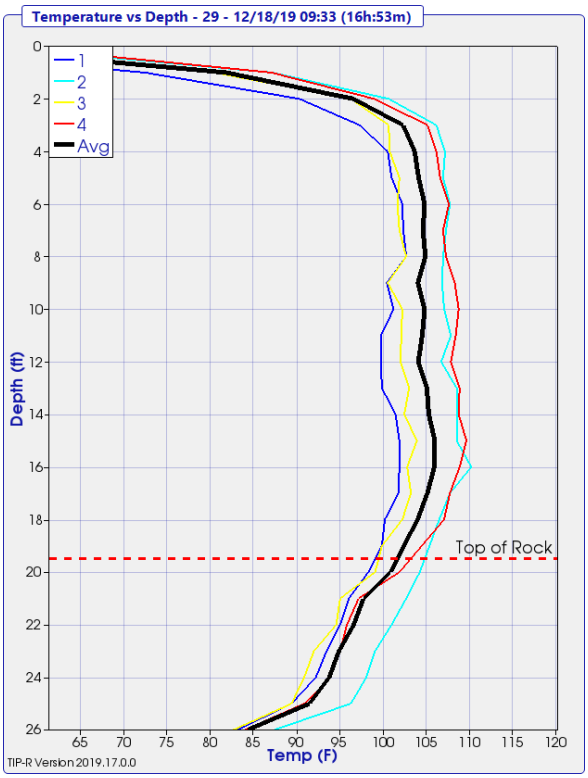

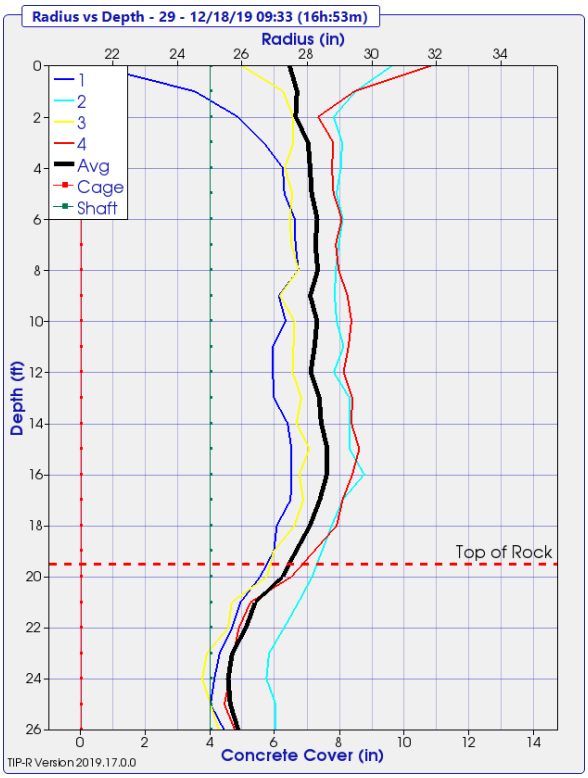

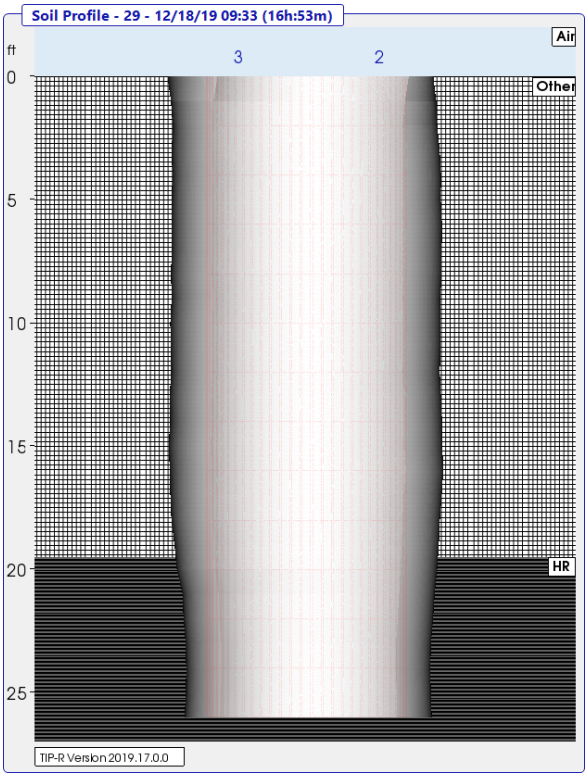

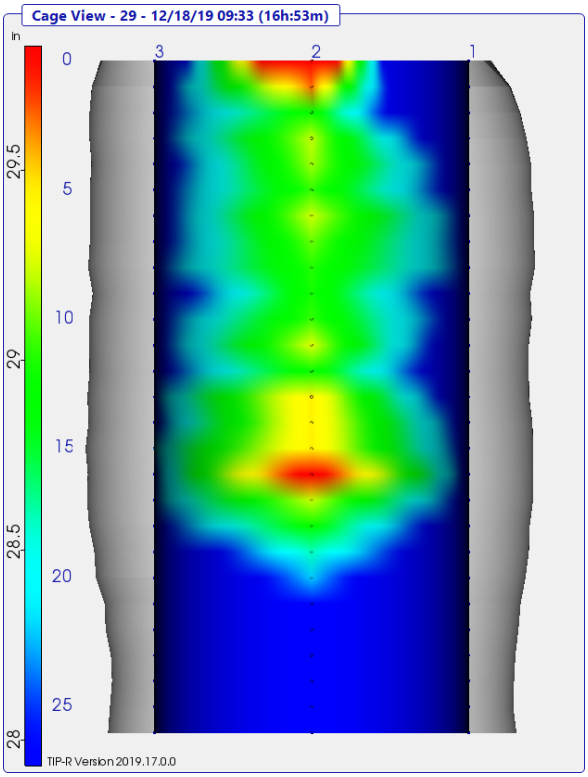

Rear Abutment Shaft 30

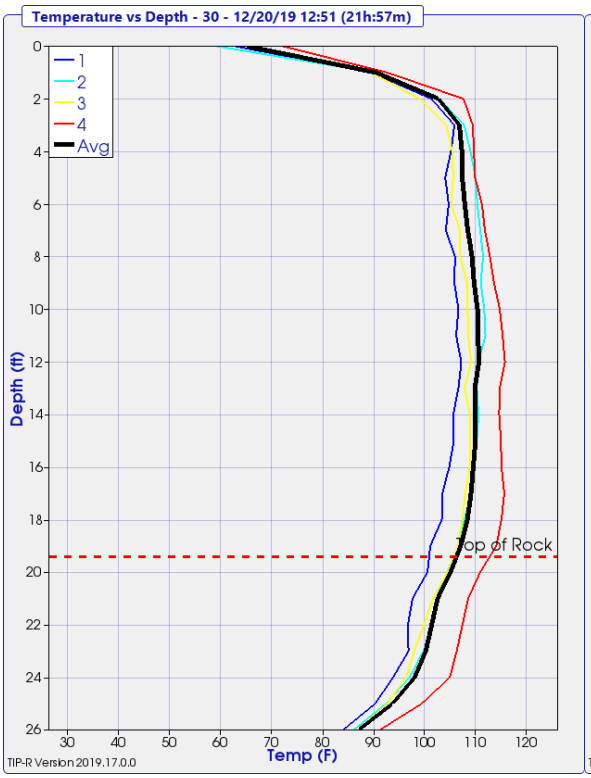

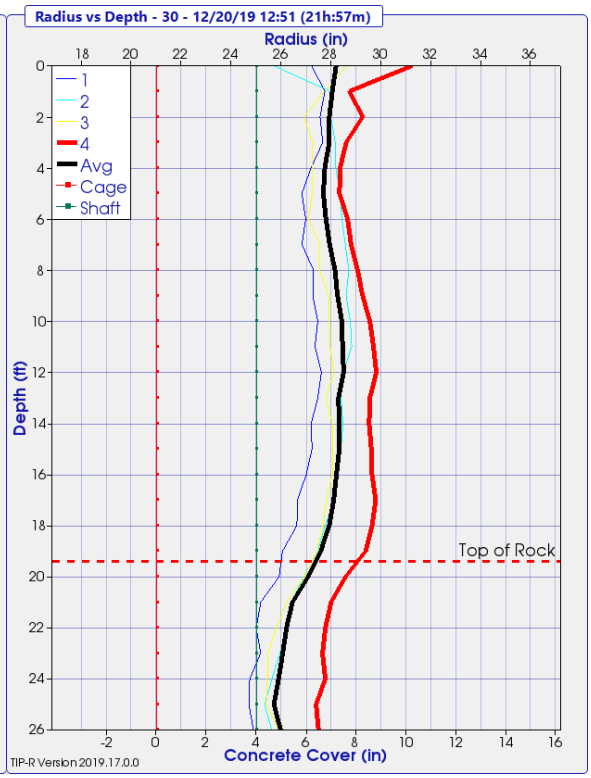

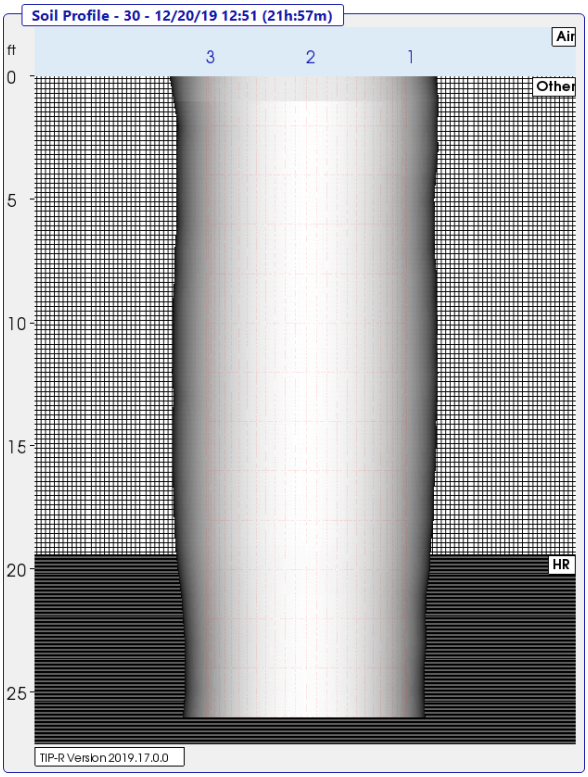

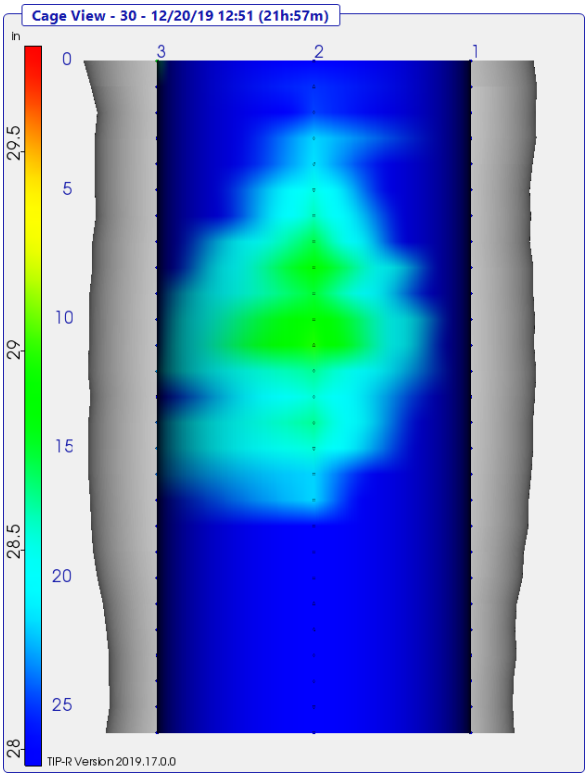

Rear Abutment Shaft 31

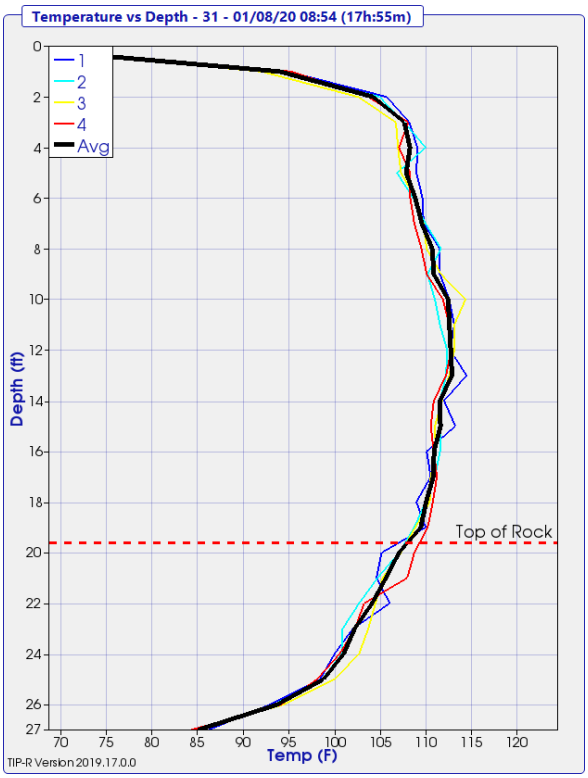

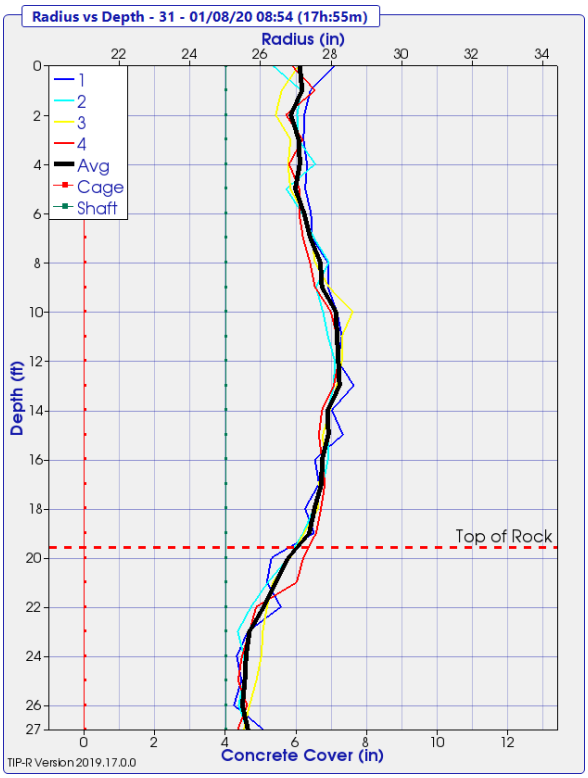

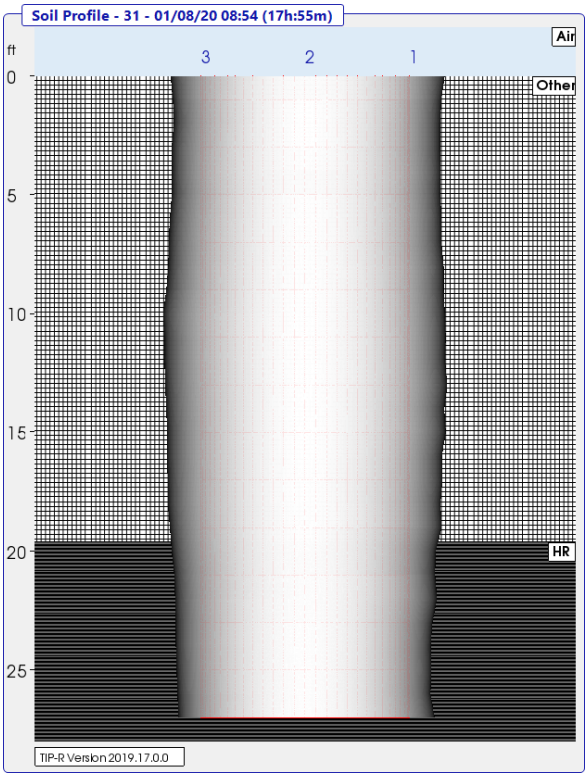

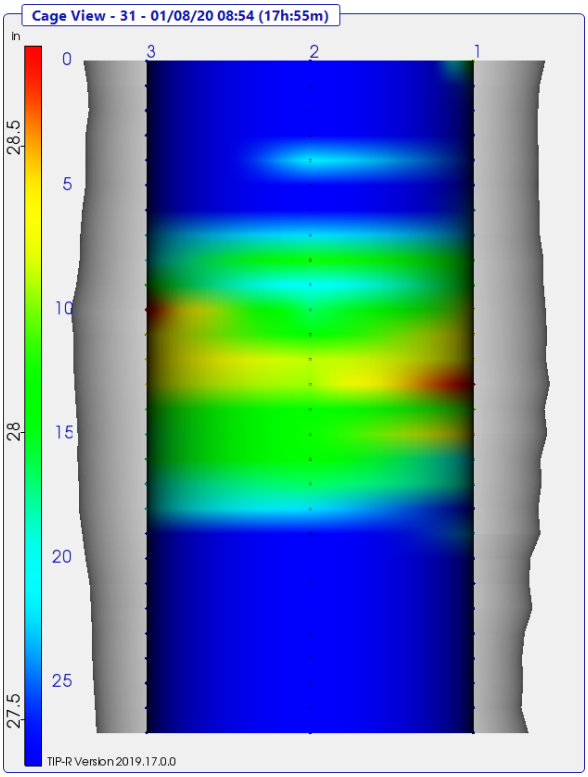

Rear Abutment Shaft 32

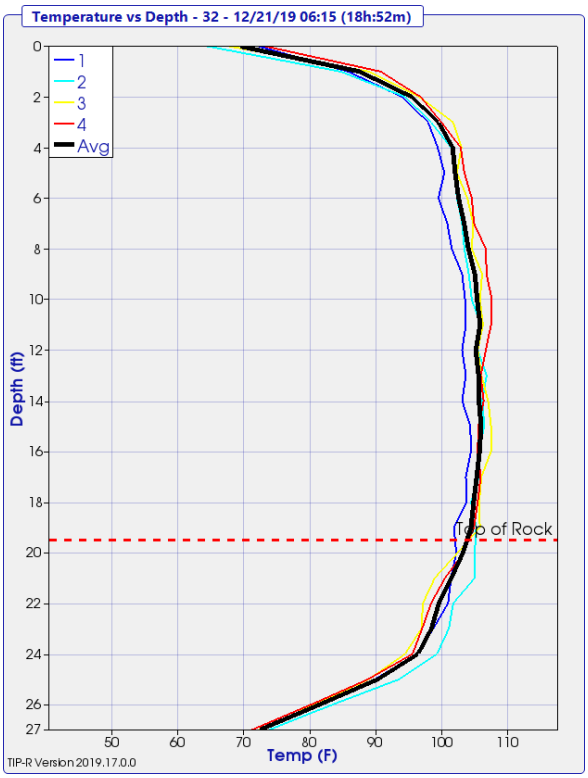

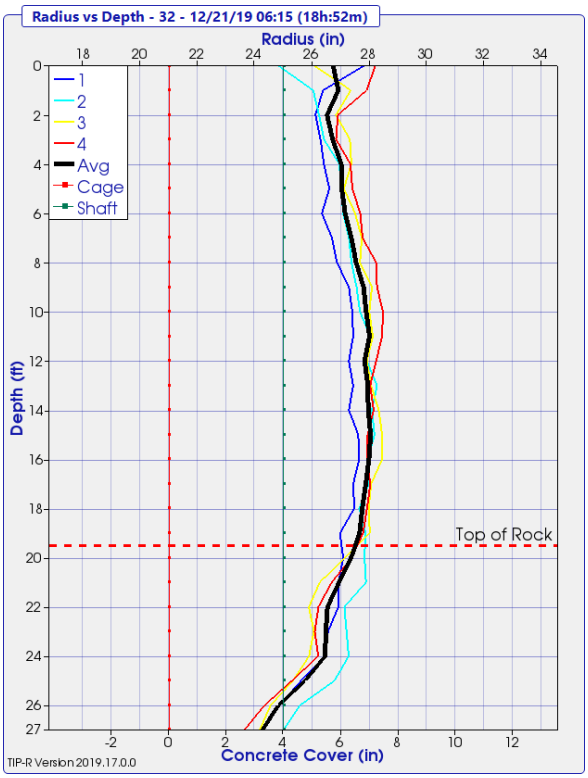

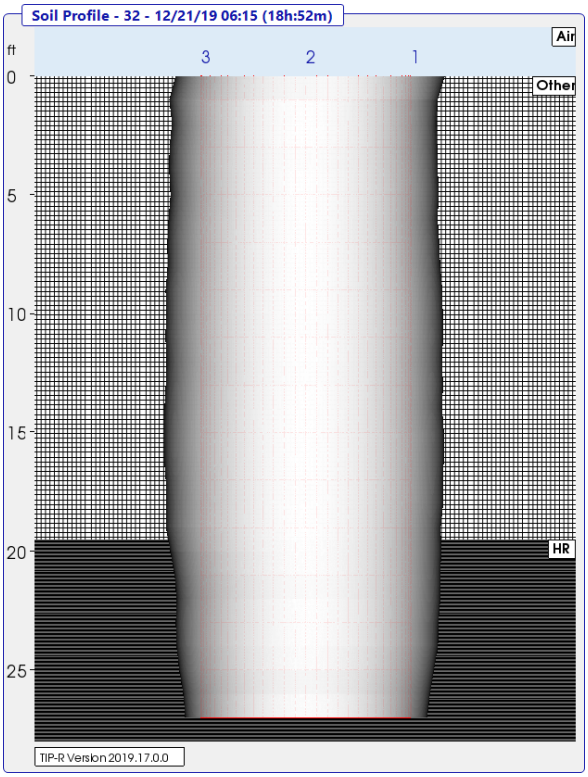

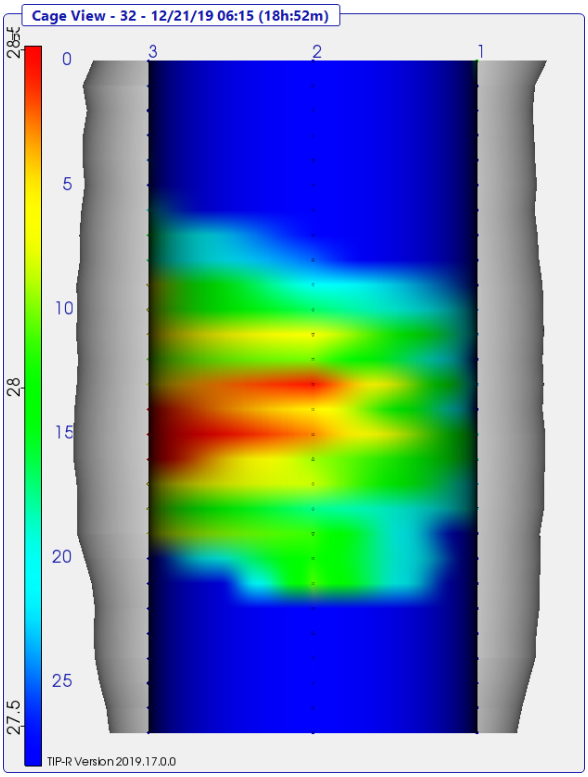

Rear Abutment Shaft 33

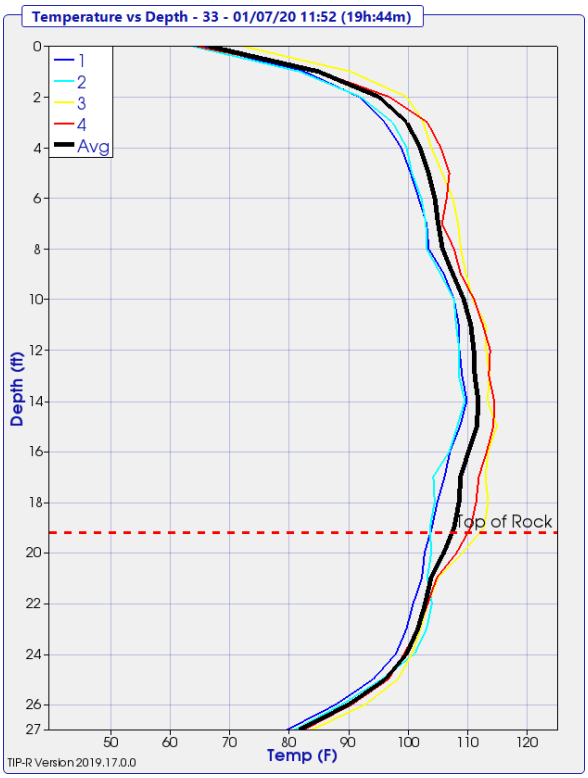

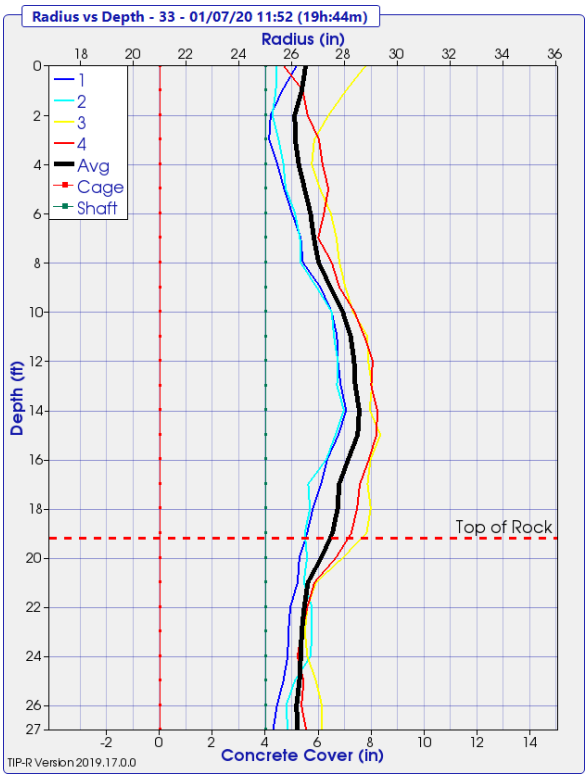

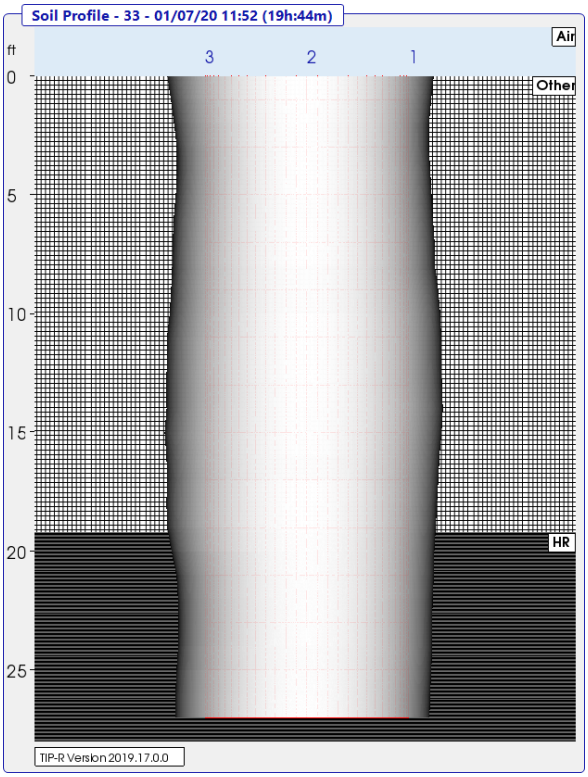

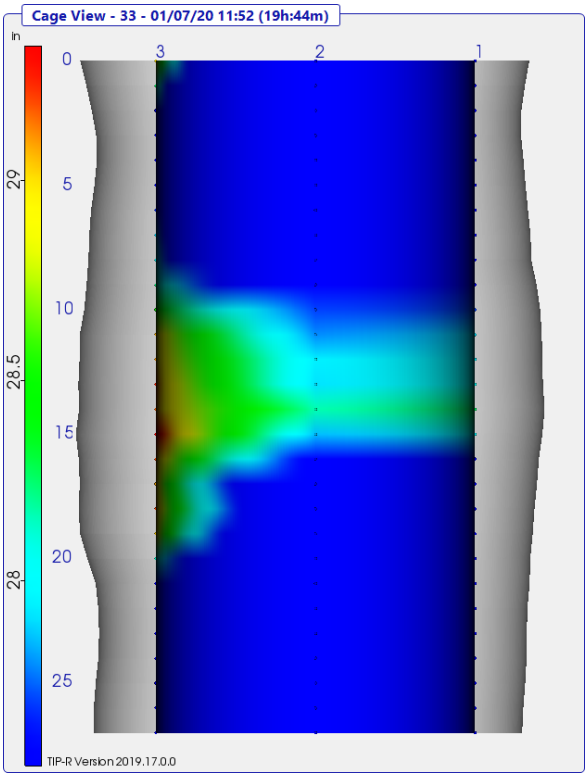

Rear Abutment Shaft 34

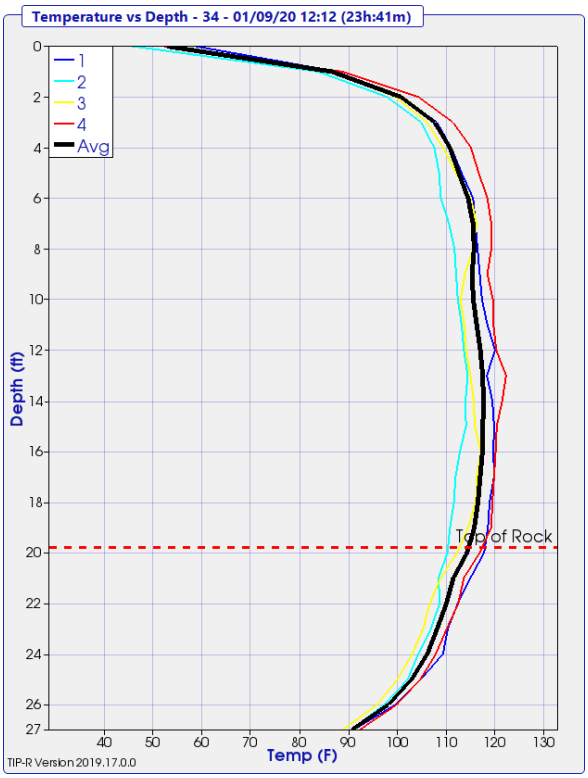

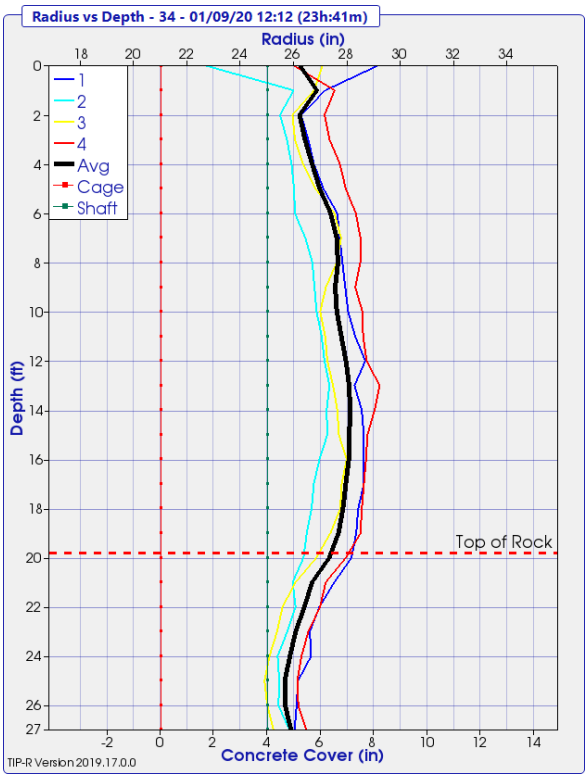

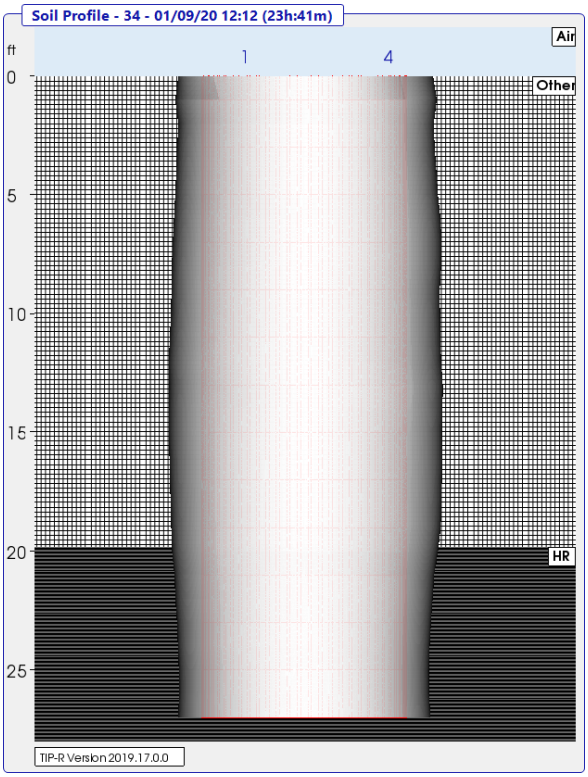

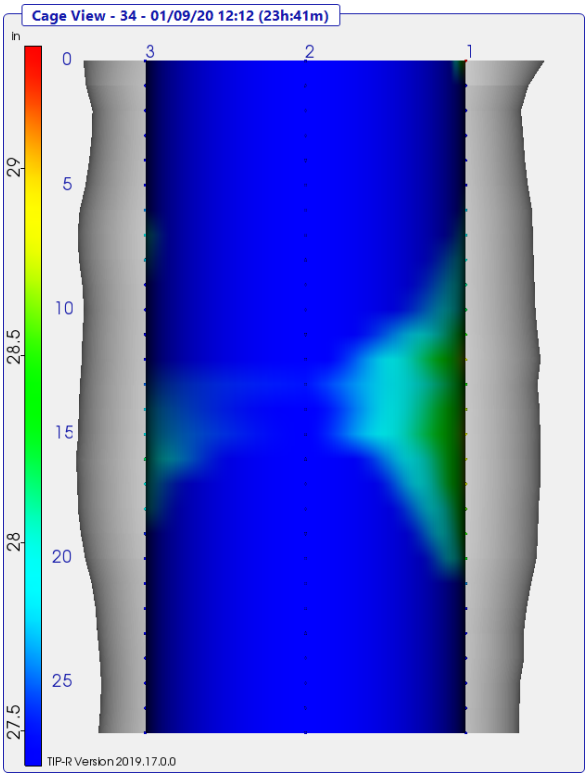

Rear Abutment Shaft 35

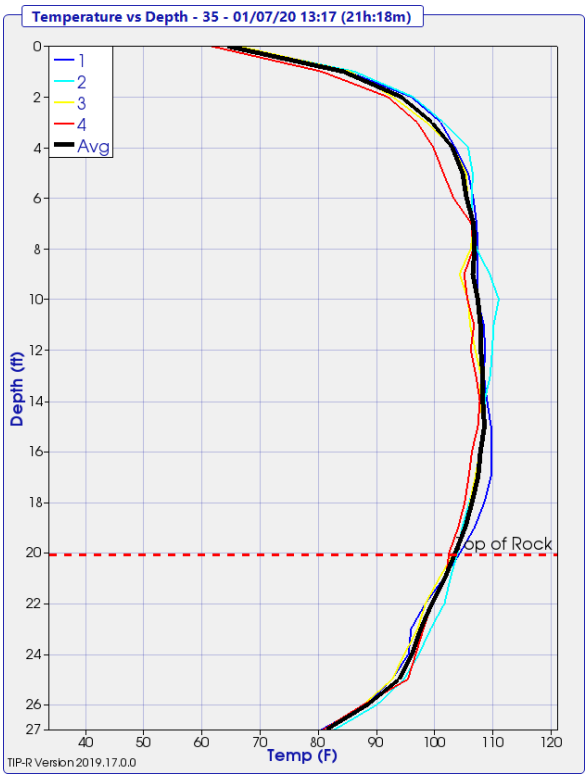

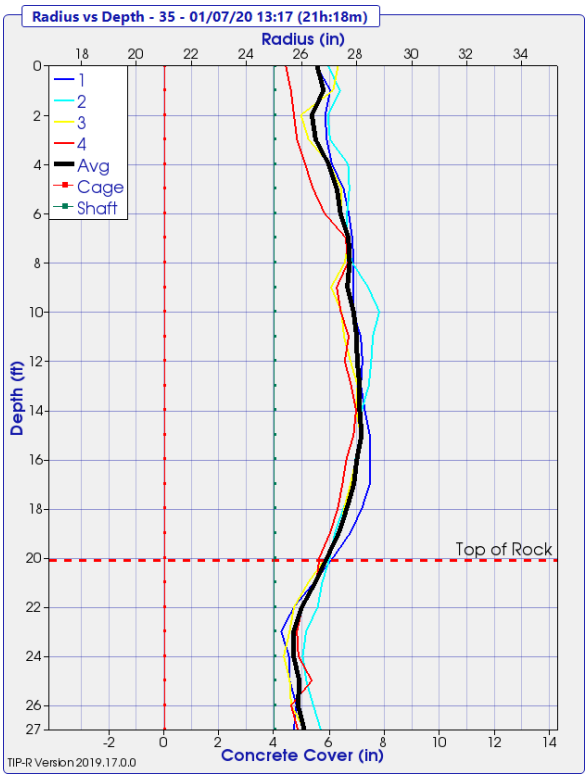

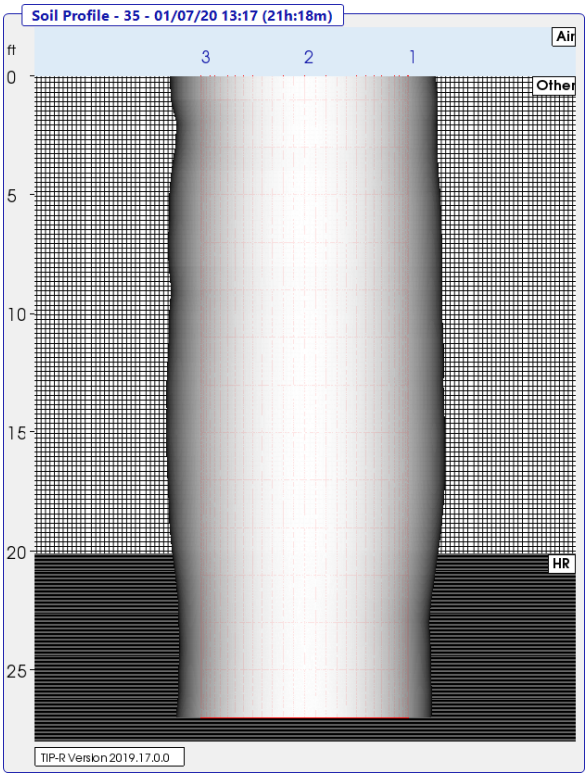

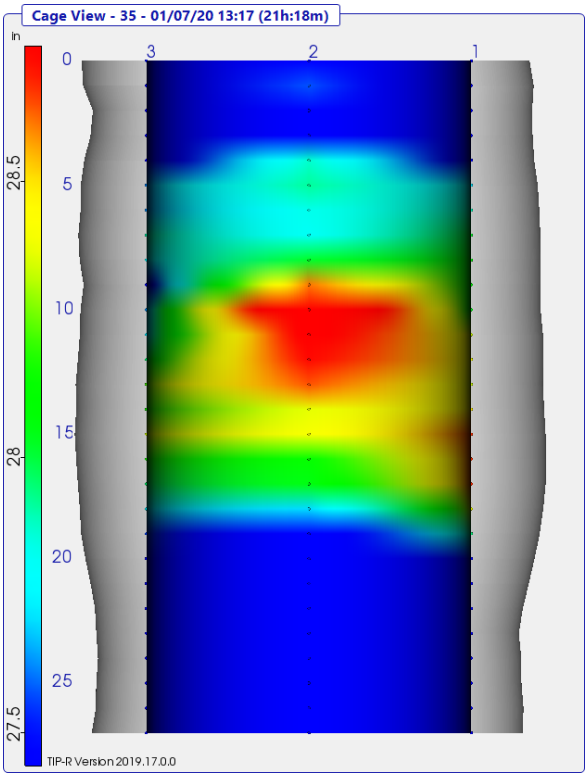

Rear Abutment Shaft 36

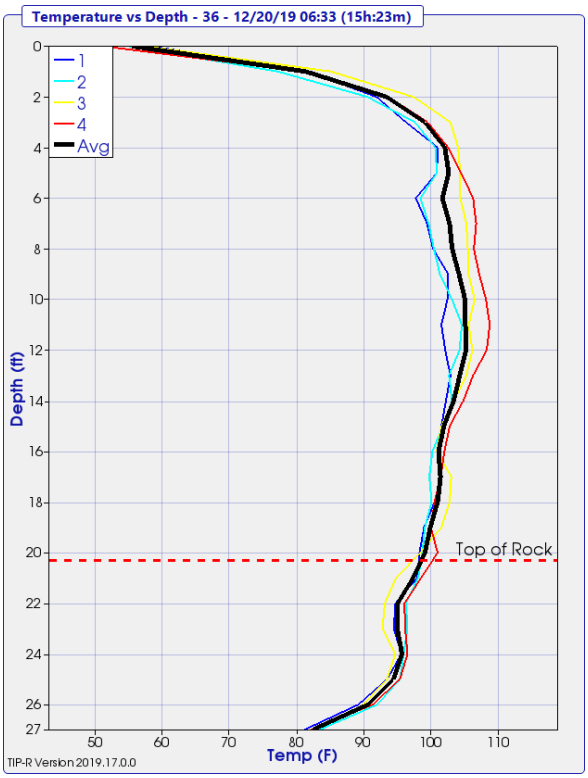

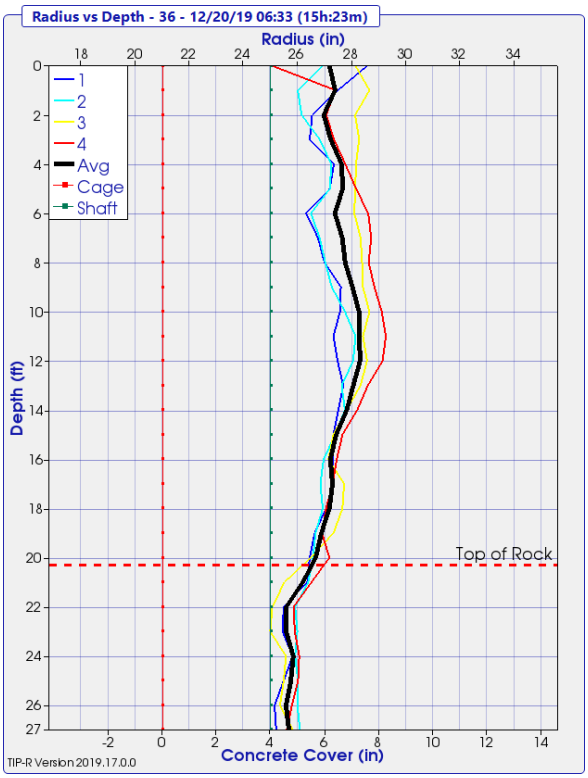

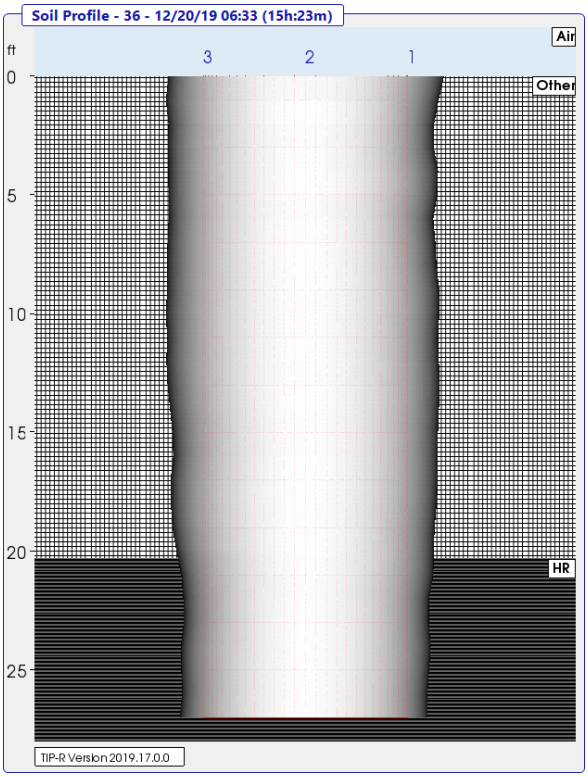

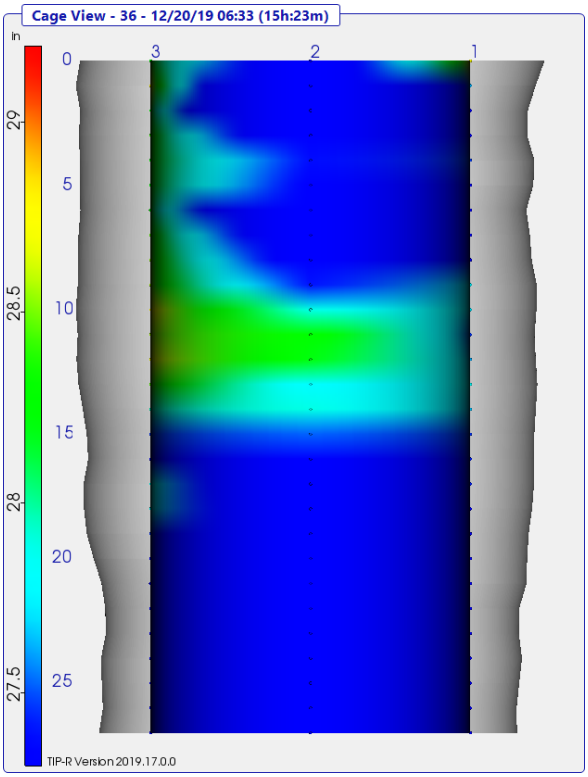

Rear Abutment Shaft 37

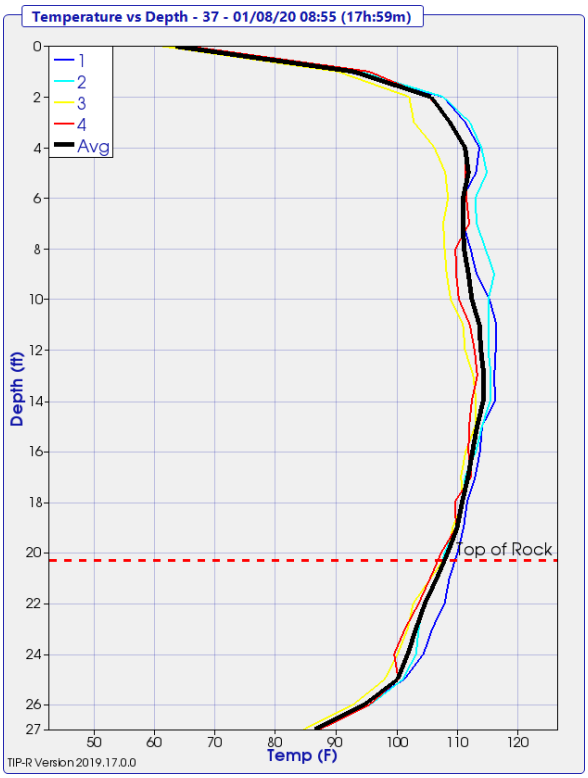

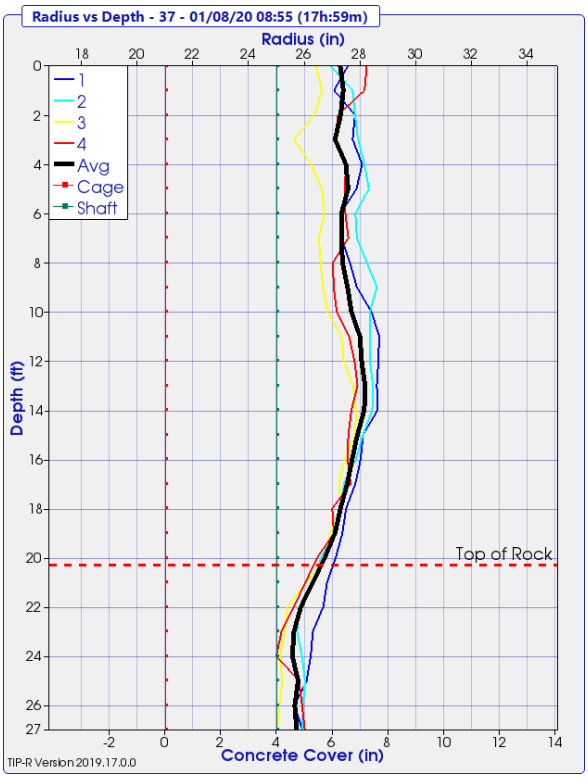

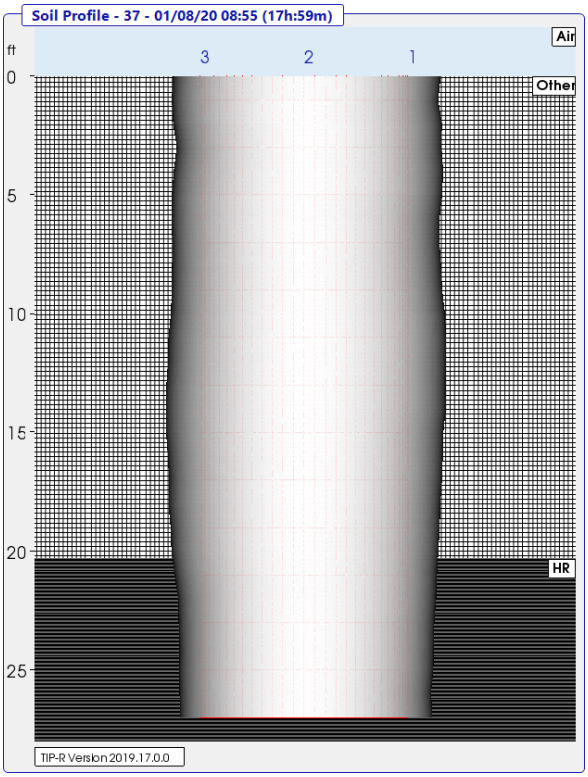

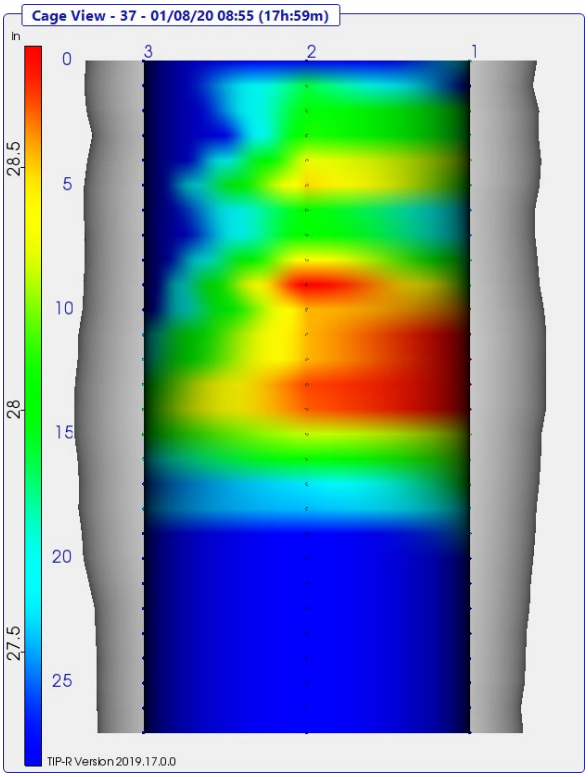

Rear Abutment Shaft 38

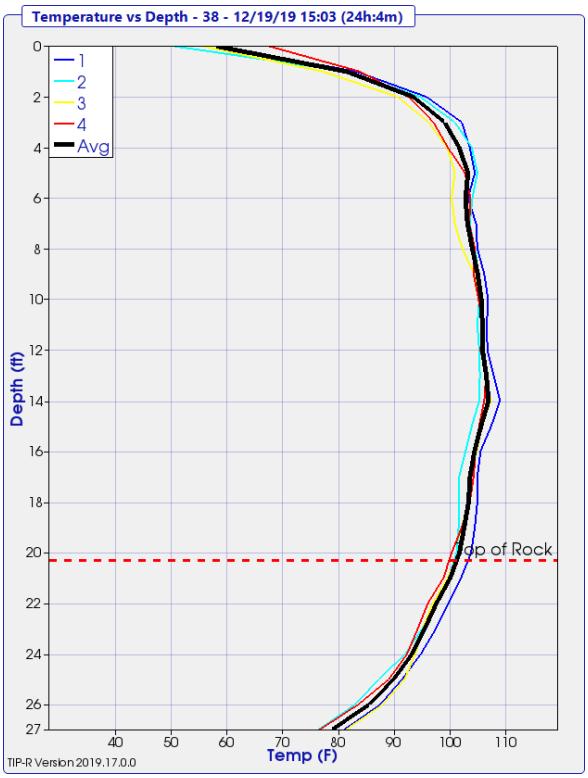

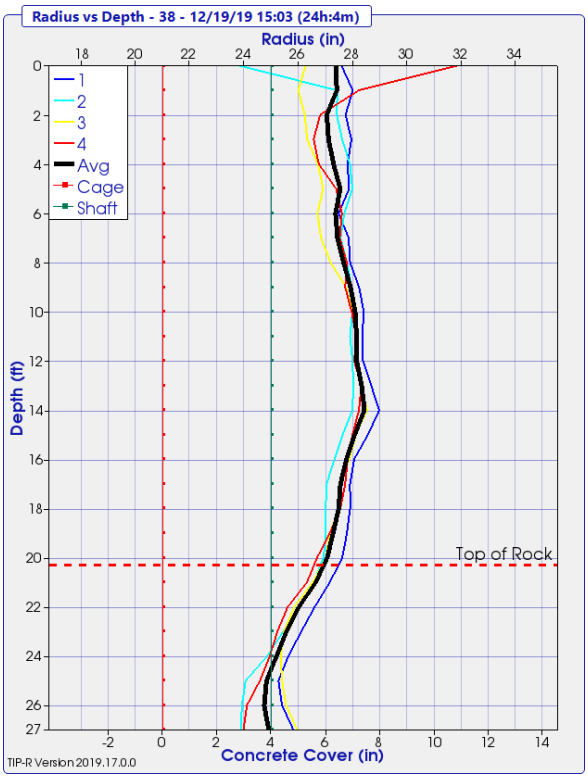

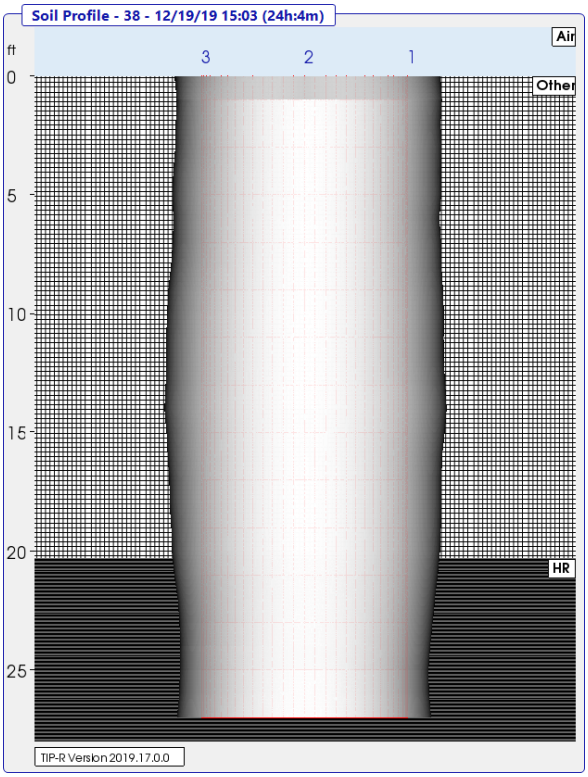

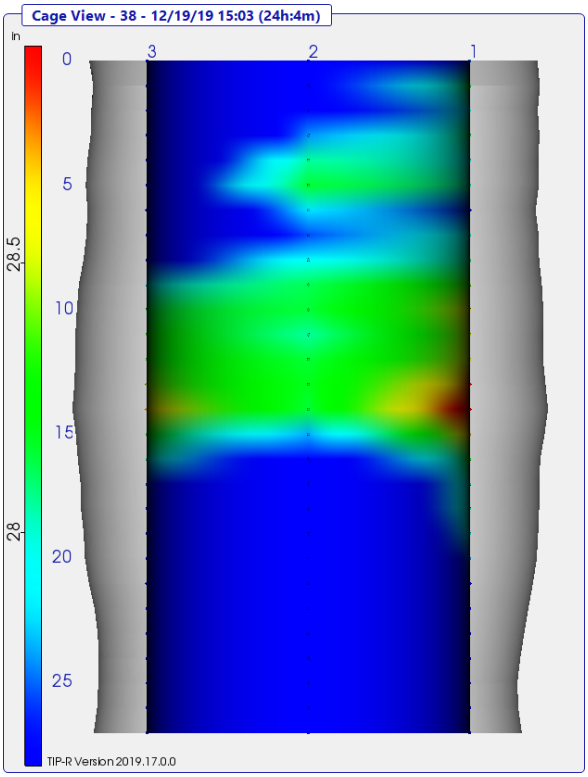

Appendix C

Drilled Shaft Layout

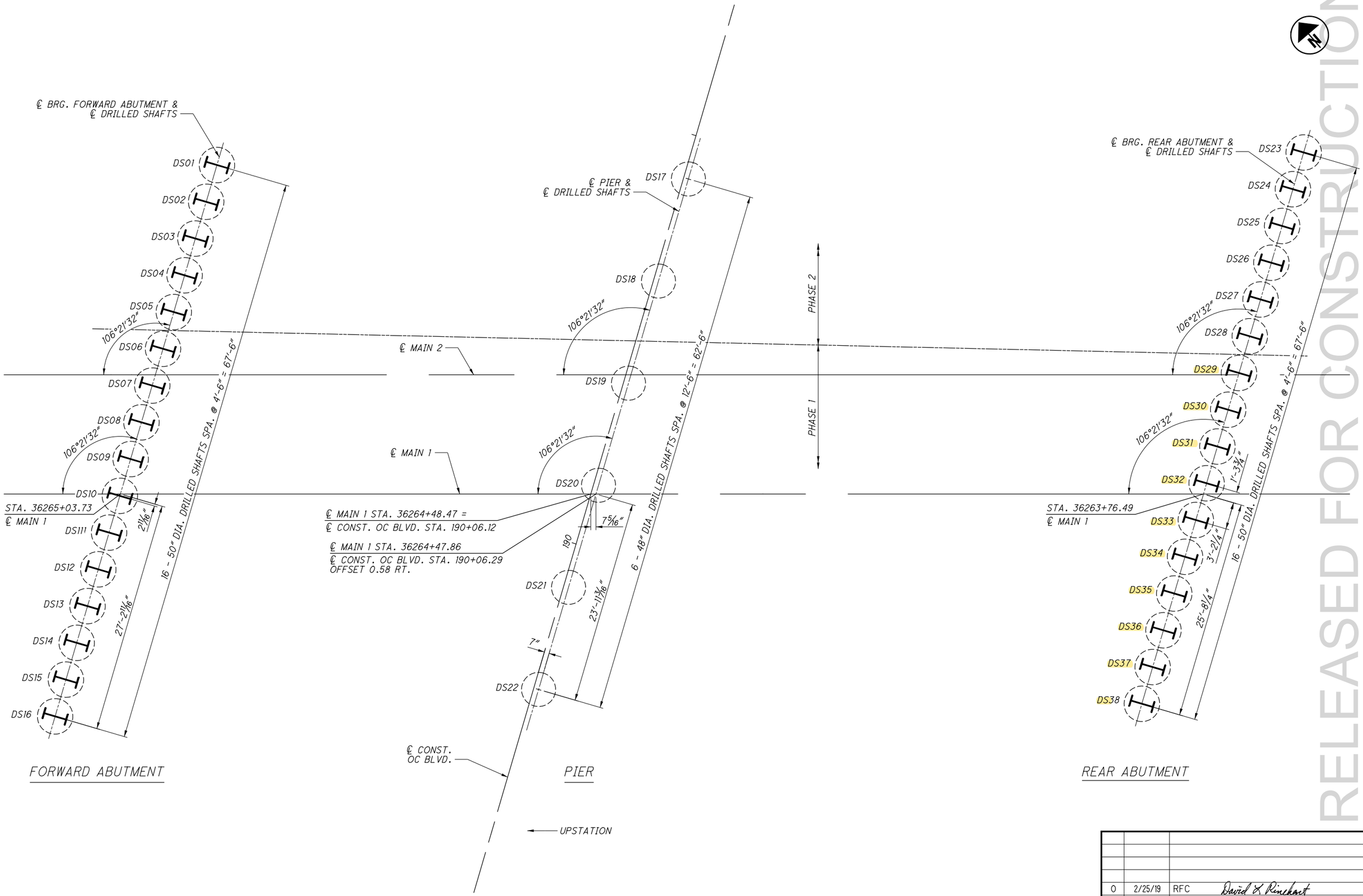

NO.	DATE	DESCRIPTION
0	2/25/19	RFC

ISSUE RECORD

David L Rinehart

RELEASED FOR CONSTRUCTION

DESIGN AGENCY
Michael Baker INTERNATIONAL
1111 SUPERIOR AVE E., SUITE 2300, CLEVELAND, OH 44114

DESIGNED	DRAWN	REVIEWED	DATE
GMC	GMC	JWB	11/5/2018
CHECKED	REVISED	STRUCTURE FILE NUMBER	
CDC	—	1801519	

FOUNDATION PLAN
CUY-010-2039
NORFOLK SOUTHERN RAILROAD OVER OH-10

CUY-IR490/SR010-2.09/19.28
PID No. 96833

RFC SUBMITTAL
BU-22 - NORFOLK SOUTHERN BRIDGE OVER OH-10
...\Sheets\010_2039C_S0601.dgn 3/18/2019 1:37:47 PM ccummings

Submittal: 148

Revision:
Date Submitted: 5/27/2022
Response Due By:

kokosing CONSTRUCTION COMPANY, INC.
886 McKinley Ave.
Columbus, OH 43222
Phone: (614) 228-1029
Fax: (614) 228-7065

Project: 16051 - ODOT 173000 CUY IR 490/SR010 (OC3)
Description: New Sealing System for NS and E.89th

To: Julie Meyer, PE
Ohio Department of Transportation - District 12
Email: Julie.Meyer@dot.ohio.gov

From: Jacob Hasselbach
Kokosing Construction Company
Email: jhasselbach@kokosing.biz

Submittal Type:	Submitted For:
☐ Engineered Drawings	☒ Approval
☐ Shop Drawings	☐ Record
☐ Working Drawings	☐ Other
☐ CPM Schedule	
☐ Material Certifications / Test Results	**Sent Via:**
☐ Reports	☒ Attached (Electronic)
☐ Product Data/Samples	☐ Attached (Hard Copy)
☒ Other: Sealing Material Product Info	

Submittal #	Copies	Spec #	Rev. #	Description	
148	1			148 – New Sealing System for NS and E.89th	

Comments:

Please see attached PDF's and email chain concerning the new Tex-cote sealing system that will be used on the E.89th and NSRR structures

- Tex-cote XL-70 Bridgecote w/ Silane
- Tex-cote Graffiti Gard IV

Signed: Jacob E Hasselbach

TEX·COTE®
TEX-COTE LLC
Anti-Graffiti Coating Systems

GRAFFITI GARD® IV LOW LUSTER CLEAR OR PIGMENTED

DESCRIPTION

GRAFFITI GARD® IV is a low luster clear or pigmented non-sacrificial, two-component, water-based, high performance aliphatic urethane coating that resists graffiti from a variety of materials including spray paints and marking pens. In many cases, freshly applied wet spray paint or ink will actually crawl back on to itself, frustrating the would-be tagger into stopping and moving on to another target. The slick surface is easy to clean with GRAFFITI GARD® IV BIODEGRADABLE CLEANER followed by power washing.

FEATURES

- Simple to mix and apply
- Water-based formula
- Excellent graffiti resistance
- Excellent UV resistance
- Easy removal of graffiti
- Breathable coating.
- Low VOC
- Low luster finish

BENEFITS

- Protects surface against graffiti.
- Water repellant surface stays clean looking.
- Easy removal of graffiti
- Low VOC, able to be used in all states and jurisdictions.

RECOMMENDED OVER

Can be used over many interior and exterior vertical surfaces including bare concrete, split faced block, clean and sound previously coated concrete, brick, properly prepared previously coated metal, and other manufacturer approved surfaces.

APPLICATION

Application Equipment: Application of GRAFFITI GARD® IV LOW LUSTER CLEAR OR PIGMENTED can be done by brush, roller, or airless sprayer. When spraying product, proper respiratory protection is required. Airless sprayer should use .011 - .013 or super fine spray tip.

Surface Preparation: Proper surface preparation is essential to achieve the proper results with GRAFFITI GARD® IV LOW LUSTER CLEAR OR PIGMENTED. All surfaces must be clean, dry, and in sound condition. Remove all oil, dust, grease, dirt, and other foreign material to ensure proper adhesion. If the surface is previously painted, ensure that it is in sound condition and cleaned of all contaminants. Smooth or glossy coatings should be dulled by abrading the surface, and then all dust removed from the surface. In cases of directly applying to metal, cross-hatch adhesion tape test should be used to insure adequate bonding. Adjacent surfaces not to be coated must be masked.

Primer System: When applied to a porous concrete surface such as split-face block, the substrate should be primed with RAINSTOPPER 1750W Clear Sealer. Previously painted substrates do not need priming.

Application Rate: The actual application rate is dependent on the texture and absorbance of the surface being treated. Typical application rates will be 250-350 square feet per gallon for clear and 150-200 square feet per gallon for pigmented. Textured or absorbent surfaces will require additional material. **Apply in one coat, do not over apply film build as excessive thickness may create milky appearance through air entrapment.**

Mixing: GRAFFITI GARD® IV LOW LUSTER CLEAR OR PIGMENTED are two-component products that must be mixed together prior to the application. Open containers and add the clear Part B slowly while mixing into the Part A container (Note 5/gal kit requires mixing in two Part B containers). Mix approximately 2-3 minutes for uniform viscosity and full color development. Do not over mix or foam bubbles may be created. Once mixed, you will have 1-2 hour pot life to apply mixed product. The usable pot life is temperature dependent and is shorter at higher temperatures. Product should not be thinned or diluted.

Application: GRAFFITI GARD® IV LOW LUSTER CLEAR OR PIGMENTED should be applied in a timely manner, thus planning the application is important. A mock-up sample application is recommended for final approval by architect, engineer, or contractor of the surface appearance prior to starting project.

Safety: Apply with adequate ventilation. Follow all safety precautions including proper respiratory protection as noted in the Material Safety Data Sheet.

Clean-Up: Clean equipment promptly with soap and water.

GRAFFITI REMOVAL

Graffiti should be removed as soon as possible. Spray paint graffiti should be removed with GRAFFITI GARD® IV BIODEGRADABLE CLEANER followed by power washing. Cleaner should be applied by brush or roller, allow to remain on the surface 10 minutes, then scrubbed with a bristle brush, wait an additional 5 minutes, and power wash. Additional application of stripper may be necessary for complete graffiti removal. Graffiti not removed in the first few weeks may result in ghosting after cleaning.

REPAINTING

Prior to repainting or top coating GRAFFITI GARD® IV LOW LUSTER CLEAR OR PIGMENTED, abrading the surface substrate will be necessary. Light sanding or using steel wool are acceptable ways to remove the anti-graffiti properties.

©2021 Tex-Cote LLC For professional use only. Not for sale or use by the general public. 11/2021

BEST PERFORMANCE

- Follow all instructions closely for surface preparation, mixing, and application
- Adjacent surfaces not to be coated should be well masked.
- Apply under ideal weather conditions with temperatures between 50-90˚F.
- Shelf life is 6 months at room temperature. Containers should be stored upright and sealed.
- Periodic cleaning with a power-washer will remove any atmospheric dust or dirt residues and keep the surface fresh looking.
- Remove graffiti as soon as possible for greatest ease of removal.
- Allow a minimum cure time of 3 days (72 hours) to achieve anti-graffiti properties
- **Do not thin Part A or B, will affect performance and/or color**

TECHNICAL DATA

Physical Properties	Clear	Pigmented
Coverage Rate	250-350 sq ft / gallon	150-200 sq ft / gallon
Weight Percent Solids Mixed A&B	53-55%	55-57%
Density Part A	8.8 Typical	9.5 Typical
Density Part B	9.6 Typical	9.6 Typical
Density Mixed	9.0 Typical	9.5 Typical
Pot Life	> One hour	> One hour
VOC Mixed	<50 grams/ Liter	<50 grams/ Liter
Moisture Vapor Transmission (ASTM D1653)	6 perms	6 perms
Graffiti Cleanability (ASTM D7089)	100% Graffiti removal of black solvent spray paint cured for 24 hours.	100% Graffiti removal of black solvent spray paint cured for 24 hours.
Freeze/Thaw (ASTM C666)	Durability @ 300 Cycles—98.3% Weight Loss @ 300 Cycles—0% Surface Rating (Per C672) - No Scaling	Durability @ 300 Cycles—98.3% Weight Loss @ 300 Cycles—0% Surface Rating (Per C672) - No Scaling
Freeze/Thaw (ASTM C666) Modified with Saline	No visible change nor signs of cracking or delamination @ 300 cycles	No visible change nor signs of cracking or delamination @ 00 cycles
Accelerated Weathering (ASTM G154)	Observations @ 1500 Hours—No cracking, loss of adhesion or discoloration	Observations @ 1500 Hours—No cracking, loss of adhesion or discoloration
Chemical Resistance to Household Chemicals ASTM D1308	Exhibits excellent resistance to chemical agents when exposed	Exhibits excellent resistance to chemical agents when exposed
Gloss @ 60 Degrees	15-30	15-30

ORDER INFORMATION

Packaging:
GRAFFITI GARD® IV LOW LUSTER CLEAR OR PIGMENTED are two-component products that are available in either 0.9 gallon or five gallon kits. The kit is comprised of a Part A and Part B component. Note five gallon kit is comprised of 1 Part A component and 2 Part B components.

Shelf Life:
Six months in unopened containers. Store indoors and maintain temperature of 45-100˚F.

SAFETY

Use protective clothes, glasses, and gloves when mixing and applying. Use with adequate ventilation. When applying by spray, proper respiratory protective equipment must be worn. Follow recommendations on Material Safety Data Sheet.

VOC COMPLIANCE

All TEX-COTE® products comply with federal and state Volatile Organic Compound (VOC) rules and regulations. Please contact your nearest TEX-COTE LLC office for assistance on the local VOC compliance in the area of intended use.

WARRANTY

Upon completion of application of coating in accordance with the manufacturer's recommendations, TEX-COTE LLC will extend its limited commercial warranty for product replacement as a results of a defect in the material. The manufacturer must be notified prior to the application of the coating and the application must be in compliance with manufacturer's recommendations for installation. TEX-COTE LLC shall have no obligation to contribute or to otherwise participate in labor or cost associated with effecting repairs. Specimen copy of material warranty is available upon request.

TEX·COTE®
TEX-COTE LLC
CORPORATE OFFICES & EASTERN PLANT
2422 East 15th Street Panama City, Florida 32405
Tel: (850) 769-0347 Fax: (850) 913-8619

COMMERCIAL SALES OFFICE
4101 Ravenswood Road, Suite 218
Ft. Lauderdale, Florida 33312
Tel: (954) 581-0771 Fax: (954) 581-9516

WESTERN FACILITY
417 E. Weber Avenue
Compton, California 90222
Tel: (323) 233-3111 Fax: (310) 438-2873

©2021 Tex-Cote LLC For professional use only. Not for sale or use by the general public. 11/2021

TEX•COTE®
TEXTURED COATINGS OF AMERICA, INC.

Transportation Products

XL 70® BRIDGE COTE® W/SILANE

DESCRIPTION

TEX•COTE® XL70® BRIDGE COTE® with Silane is a one component, ready to use concrete protective coating. This material is utilized for the protection and beautification of bridges and above-grade exterior surfaces, such as concrete walls, columns, spandrels, median dividers, bridge parapets, retaining walls, etc.

FEATURES

- Cure/Seal/Coat in One Application
- Long term performance, with Silane performance benefits
- TTC-555b weather compliance
- Aesthetics--Uniformity, factory mixed
- Variety of textures and colors
- Excellent adhesion to concrete

BENEFITS

- Cost savings as compared with hand rubbing concrete.
- Broad range of temperature application
- One coat application over certain surfaces
- High build textured coating
- Can be applied over damp concrete

RECOMMENDED OVER

Properly prepared new pre-cast, tilt-up, or poured concrete and other manufacturer approved substrates.

APPLICATION

For spraying, use a Graco President 10:1 pump or GM 1030 pump. Refer to the TEX•COTE® application manual for further information.

Roll On Application:

Overall appearance depends on application technique. Mock-up sample for engineer/owner approval is recommended. Short, medium or long nap rollers may be used for standard application depending on texture desired.

Surface Preparation

Surface preparation by the general contractor, prior to the application of the concrete coating, shall consist of general surface finish in accordance with the specific requirements of the state transportation department or governmental agency. Surface to be coated shall be free from efflorescence, flaking coatings, oil, curing compounds, release agents and other laitences prior to the application of the concrete coating. Curing compound and release agent must be removed and may require light sandblast or water blast at a minimum of 2500 PSI or greater. Test the wall for coating acceptability prior to application of coating. This can be done by spraying the wall with water.

If the water soaks into the wall, the wall is properly prepared, and can be coated when dry. If the water beads up and is repelled, the wall requires further cleaning prior to application of the coating. Sack and patch shall not be applied over the coating. This practice may void warranty. All sacking and patching should be completed prior to coating application. Application rate 50+/- 10 sq ft /gallon.

Spray / Roll On

Manufactured to meet Federal Specification TTC- 555B and various performance tests. A one-coat application at 50 sf/gallon develops a 15-mil dry film thickness. The approved coverage rate for TEX•COTE® XL70® BRIDGE COTE® with Silane may vary in different states and regions. Please consult the governing transportation department or governmental agency for their requirements.

Additional Applications

TEX•COTE® XL70® BRIDGE COTE® with Silane may be applied over RAINSTOPPER® Silane or Siloxane penetrant sealers. Also, TEX•COTE® GRAFFITI GARD® Protection Systems may be used over TEX•COTE® XL70® BRIDGE COTE® with Silane after a minimum of 21 days cure under ideal conditions. Consult your local representative for proper application procedures and specifications.

Clean-Up

Use mineral spirits to clean up wetmaterial; use Methyl Ethyl Ketone (MEK) or acetone for dry.

Drying / Curing Times

To touch: 48 hours

Final Cure: 2-3 weeks, minimum

Note: These times based on ideal weather conditions.

BEST PERFORMANCE

1. Do not thin XL70® BRIDGE COTE® with Silane, do not use as grout.
2. Do not mix XL70® BRIDGE COTE® with Silane in drum with other types of paint.
3. Agitate XL70® BRIDGE COTE® with Silane thoroughly prior to use.
4. May be applied over a damp, but not wet with liquid water, surface.
5. Application temperature is above 40°F (7.2°C) and rising, not exceeding 100°F (37.8°C).
6. Do not apply if rain is imminent or over frozen surface.
7. Backside of retaining walls shall be waterproofed with asphalt type below grade sealer.
8. TCA does not promote coating the sealant joints, nor is the sealant compound an approved substrate.
9. In cool weather conditions, 5-gallon pails are recommended for ease of use.

©2017 Textured Coatings of America, Inc. For professional use only. Not for sale or use by the general public. 08/2017

TECHNICAL DATA

Table 1

- Federal Specification TTC-555B
- ASTM C672-Scaling Resistance – 100 Cycles
- ASTM C642 - Absorption-Passed
- AASHTO T259/T260 Chloride Ion - Penetration Resistance
- ASTM G153 Twin Arc Weatherometer Exposure – 5,000 Hours
- ASTM C522 Mandrel Bend, 1" Conical, No Cracking
- ASTM C309/AAHSTO M148 Type II, Curing Compound Requirement - Pass
- ASTM D5860 Mississippi Highway Department Freeze /Thaw Method – 300 Cycles
- ASTM B-117 Salt Spray Resistance 2,000 hours
- ASTM D968 Abrasion Resistance – 2,000 liters – Falling Sand—No Penetration
- Infrared Spectrum – Typical
- TTP-29 Fungus Growth Resistance 21 Days – Passed
- NCHRP 244 Series IV, Southern Exposure – Passed
- NCHRP 244 Series II – Passed
- ASTM D1653 Water Vapor Transmission—15.01

Table 2

Solvent	Aliphatic
Solids, by Weight	71 % Typical
Solids, by Volume	57.0% Typical
Weight per gallon	10.0 lbs.
VOC Content	<400 grams/liter

ORDER INFORMATION

Colors

Available in TEX•COTE® standard decorative colors, Federal shade colors, and custom colors upon request.

Textures

Available in Smooth, Sand and Coarse Textures.

Container Size

Five (5) gallon pails and thirty (30) and fifty-five (55) gallon drums.

Shelf Life

Twelve (12) month shelf life if containers are sealed, upright and stored in a dry place out of the sun. Maintain temperature at 45°F and rising to 100°F (7°C to 38°C); avoid freezing. Any skins formed on surface of material must be removed prior to moving containers or mixing.

SAFETY

Warning

Combustible liquid and vapor. Keep away from heat and flames. Contains petroleum distillates, crystalline silica and lime. Vapor harmful. Use with adequate ventilation. View Material Safety Data Sheet before using material. Smoking in area where this material is used should be strictly prohibited. Keep out of reach of children.

First aid

If you experience difficulty in breathing, leave the area to obtain fresh air. If continued difficulty is experienced, get medical attention immediately. In case of eye contact, flush immediately with plenty of water for at least 15 minutes and get medical attention. For skin, wash thoroughly with soap and water. If swallowed, get medical attention immediately. Do not induce vomiting.

VOC COMPLIANCE

All TEX•COTE® products comply with federal and state Volatile Organic Compound (VOC) rules and regulations. Please contact your nearest TCA office for assistance on the local VOC compliance in the area of intended use.

WARRANTY

Upon completion of application of coating in accordance with the manufacturer's recommendations, Textured Coatings of America, Inc. will extend its limited commercial warranty for product replacement as a results of a defect in the material. The manufacturer must be notified prior to the application of the coating and the application must be in compliance with manufacturer's recommendations for installation. TEX•COTE® shall have no obligation to contribute or to otherwise participate in labor or cost associated with effecting repairs. Specimen copy of material warranty is available upon request.

TEX•COTE®
TEXTURED COATINGS OF AMERICA, INC.

CORPORATE OFFICES & EASTERN PLANT
2422 East 15th Street Panama City, Florida 32405
Tel: (850) 769-0347 Fax: (850) 913-8619

COMMERCIAL SALES OFFICE
4101 Ravenswood Road, Suite 218,
FT. Lauderdale, Florida 33312
Tel: (954) 581-0771 Fax: (954) 581-9516

WESTERN PLANT
5950 S. Avalon Blvd.
Los Angeles, California 90003
Tel: (323) 233-3111 Fax: (323) 232-1071

©2017 Textured Coatings of America, Inc. For professional use only. Not for sale or use by the general public. 08/2017